ASHCROFT®

PRESSURE & TEMPERATURE INSTRUMENT ORDERING HANDBOOK

CONTENTS

PRODUCT TYPE

PRODUCT TYPE	Product Type / Model Type/Numbers	PAGE 1
	Introduction	PAGES 3-8
QUICK GUIDES	Digital Gauges	PAGES 11
	Test Instruments	PAGES 13-15
	Process Gauge	PAGES 17-18
	Stainless Steel Case & Industrial Gauges	PAGES 18-26
	Sanitary Gauges	PAGES 27
	Commercial Gauges	PAGES 29-32
	Diaphragm Seals & Instrument Isolators	PAGES 33-37
	Pressure Transducers	PAGES 39-44
	Temperature Instruments	PAGES 45
	Pressure and Temperature Switches	PAGES 47-50
PRESSURE GAUGES	Digital Gauges	PAGES 51-56
	Test Instruments	PAGES 57-72
	Process Gauges	PAGES 73-84
	Stainless Steel & Industrial Gauges	PAGES 85-118
	Sanitary Gauges	PAGES 119-124
	Options for Process, Stainless Steel, Test & Industrial Gauges	PAGE 125
	Commercial Gauges	PAGES 127-140
DIAPHRAGM SEALS	Introduction & Selection Information	PAGES 141-143
	Specification Matrix	PAGES 144-151
	Diaphragm Seals	PAGES 152-163
	Iso-Ring, Iso-Spool	PAGE 164-165
	Line Assemblies, Engineered Assemblies	PAGE 166-167
	Seal Options, All Types	PAGES 168-169
	Table A – Min./Max. Operating	PAGES 170-171
	Seal Style Chart	PAGE 172 -177
PRESSURE TRANSDUCERS	GC31, GC35, GC51, GC55	PAGE 181-184
	T2 Series - High Performance	PAGE 185
	G2 Series - Tough OEM	PAGE 186
	A2, A2X, A4 Series - Heavy Industrial, Hazardous Location	PAGE 187-189
	KM 15 Series - Compact OEM	PAGE 191
	K1, K2, K8 - High Pressure	PAGES 192-194
	KX for Pulp & Paper Applications	PAGE 195
	KS for Sanitary Applications	PAGE 196
	H2	PAGE 190
	GC30, GC52	PAGE 197-198
	XLdp Series - Low Pressure	PAGES 199-203
	Duratran® Pressure Transmitter	PAGE 204
	Panel Meter	PAGE 205
	Pneumatic Transmitters	PAGE 206
THERMOMETERS	Bimetal Thermometers	PAGES 209-213
	Duratemp Thermometers	PAGES 217-223
	Case Dimensions, Thermowells, Options	PAGES 224-228
	Accessories	PAGE 229
PRESSURE AND TEMPERATURE SWITCHES	Selection Information	PAGES 233-236
	A Series – Pressure	PAGES 237-238
	B Series – Pressure, DP Pressure, Temperature, Exp. Proof	PAGES 239-242
	F Series – Pressure	PAGES 243
	G Series – Pressure, Temperature	PAGES 244-245
	H Series – Pressure Hydraulic	PAGE 246
	L Series – Pressure, DP Pressure, Temperature	PAGES 247-248
	N Series – Electronic Pressure Switch	PAGES 249-250
	P Series – Pressure, Temperature	PAGES 251-252
	Deadband Ranges & Options	PAGES 253-257
	DDS Series – Differential Pressure	PAGES 258
ACCESSORIES	Accessories & Options	PAGES 261-268
APPLICATION DATA	Application Data	PAGES 271-277

MODEL TYPE/NUMBERS

How To Use Your Ashcroft Ordering Handbook

If you are uncertain which product is best suited to your application first refer to the Product Quick Guides on pages 11 through 49. The Quick Guides provide a brief overview of product specifications and some common applications. You can then refer to the page number noted on the bottom of each column for more information. The Quick Guides and the corresponding product pages are colored coded for easy reference. Please visit ashcroft.com for more information on our products.

2030, 2089, 2086, 2084, 2074, 2174, 2274, DG25
A4A, 1082, 1084, ATE-2, ST-2A, 1305D, 1327D, 1327CM, PT, AVC-1000
1259, 1279, 1377, 1379, 2462
T5500, T6500, 1008S, 1009 , 1109, 1010, 1017, 1220, 1020S, 1038, 1339, 1125, 1125A, 1127, 1128, 1130, 1131, 1132, 1133, 1134, 5503, 5509, 1150H, 1122, 1187, 1188, 1189, 1490, 1495 Series, 1032, 1036, 1037, 2030

1005/1005P/1005S, 1001T, 1001TXOR, 1008A/AL, 1005MXRG, 1005PXUL, 1007PXOR,
1000/2071A, 23DDG, 12/15DDG, MFX

100-108, 105/205, 200-207, 300-304, 310, 311/312, 315, 320, 321, 330, 500/501, 510/511, 740/747,702/703
1115A, 1115P
80, 81, 85, 86

GC31, GC35, GC51, GC55
T2
G2
A2, A2X, A4
KM15
K1, K2, K8
KX
H2
KS
GC30, GC52
XLdp, IXLdp, RXLdp, DXLdp, CXLdp
2279
DM61 (Digital Panel Meter)
4080, 4480

EI, CI, EL, Case Dimensions
600A-01, 600A-02, 600A-03, 600A-04, 600H-45, 600B

A-Series Miniature Watertight Brass Body, Stainless Steel Miniature Watertight or Explosion Proof
B-Series Type 400 Watertight Enclosure, Type 700 Explosion Proof
F-Series Anodized Aluminum, Compact, Explosion Proof
G-Series Watertight, 316 Stainless Steel Enclosure
H-Series Hydraulic, Watertight Enclosure
L-Series Watertight Enclosure
N-Series Type 700 Explosion Proof, Watertight or Explosion Proof Type 400 Watertight with Pressure Indications
P-Series Watertight Enclosure or Explosion Proof Enclosure, Dual Chamber

DDS-Seris Differential Pressure

INTRODUCTION

Ordering Handbook introduction.....3
Exclusive Ashcroft® Features.....5
PowerFlex™
True Zero™
FlutterGuard™
PLUS!™ Performance Option 6-7

The Ashcroft® Ordering Handbook is a guide for ordering Ashcroft pressure, temperature and control instruments, accessories and options. Each product is represented with a description of its general characteristics. For each major product there are selection tables for the important variables that must be considered when selecting an instrument.

Each product line description contains an example of a simple ordering code that will make it easier for you to order Ashcroft products.

Ashcroft Gold Service℠

Ashcroft Gold Service℠ guarantees shipment of specific Ashcroft instruments in five working days or less. Those products are identified throughout this catalog by a Gold Service Seal. For recent additions to the Ashcroft Gold Service Program, contact Inside Sales.

Ashcroft Inc. Trademarks

Ashcroft maintains a variety of globally Registered Trademarks and Service Marks, many of which appear in this Ordering Handbook. The following Trademarks and Service Marks are the property of Ashcroft Inc. and should not be used without its permission on any product or service:

Ashcroft®
Duradrive™ pressure gauge
Duragauge®*PLUS!* pressure gauge
Duragauge® pressure gauge
Duralife® pressure gauge
Duralife®*PLUS!* pressure gauge
DuraShield™ instrument assembly
Duratemp® thermometer
Duratran® pressure transmitter
Duratran®*PLUS!* pressure transmitter
Duratube™ system
Easy Zero™ adjustment
Everyangle™ connection
FlutterGuard™ option
Heise®
Maxivision® dial
MicroSpan™ adjustment
MiniGauge® pressure gauge
PLUS!™ Performance option
Power*Flex*™ movement
Quick-Select™ calibrator
Si-Glas™ sensor
SpoolCal™ actuator
True Zero™ indication
Weksler®
Willy®

Ashcroft Inc. Service Marks

ActionLine®
Ashcroft ActionLine®
Ashcroft Gold Service℠
Gold Service℠
Heise ActionLine®
Heise Gold Service℠

Other Trademarks

These non-Ashcroft trademarks are used throughout the book and are the property of their respective owners:

AMINCO®
Bendix®
Buna N®
Carpenter 20®
Cherry Burrell®
Dacron®
Decrin®
Duratherm 600®
Grafoil®
Halar®
Halocarbon®
Hastelloy
Hirschmann®
Inconel®
Iso-Ring®
Iso-Spool®
Kalrez®
Kynar®
Monel®
Neoprene®
Nicrobraze®
Noryl®
Syltherm®
Teflon®
Tri-Clamp®
Ultrafil®
VCO®
VCR®
Viton®

Product Information

For additional product information contact us at:

Ashcroft Inc.
Inside Sales
250 East Main Street
Stratford, CT 06614-5145
Phone: 203-378-8281
email: info@ashcroft.com
or call the Ashcroft® ActionLine℠ at 1-800-328-8258 or visit our web site at: ***www.ashcroft.com***

ISO 9000 Certification

The company-wide commitment to world class quality standards at Ashcroft Inc. has been recognized by the International Standardization Organization ISO 9000 system audit procedure. All Ashcroft Inc. instrument operations worldwide have received ISO 9001 or ISO 9002 certification for their procedures. These worldwide manufacturing operations have made the ISO Standard their guideline for doing business.

With world-class quality systems in place at all operations, customers can be assured that their buying decisions can be made every day with a higher level of supplier confidence.

ASHCROFT®

Features Found Only In Ashcroft® Gauges

Power*Flex*™

Unlike ordinary gauge movements, which may not stand up to rough handling and demanding applications, the patented Power*Flex*™ movement has the power to perform under pressure. Independent lab testing has shown that the Power*Flex* movement is more shock resistant than conventional movement gauges. In addition its superior vibration and pulsation resistance translates to another big benefit: a longer-lasting gauge, hence less replacement costs.

CONVENTIONAL MOVEMENT

ASHCROFT POWER*FLEX* MOVEMENT

True Zero™

Not "Almost Zero," "Nearly Zero," or "Around Zero"

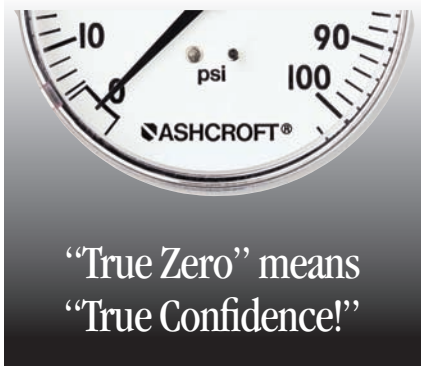

Just because a gauge reads zero, it doesn't mean there isn't any pressure on it. For example, a damaged conventional gauge might read zero, even in a pressurized system. The dial pin won't allow the pointer to fall below zero. With True Zero, there's no dial pin. So when a gauge with True Zero reads zero, that's just what there is – zero pressure. This gives you big benefits, including increased safety, reduced manufacturing and replacement costs.

FlutterGuard™

Regular gauges on high vibration/ pulsation applications have a lot of pointer flutter. So much, in fact, that sometimes it's hard to get an accurate reading. And all that extraneous motion puts excessive wear on gauge internals. So what's the answer? Ashcroft commercial gauges with FlutterGuard. FlutterGuard provides smooth, steady pointer motion that makes our gauges easy to read and longer lasting. You benefit from a performance similar to a liquid- filled gauge, without the worry of potential leakage. And no fill reduces weight and shipping costs. That's why we say, with FlutterGuard, it's…

"No fill, no flutter . . . no foolin' "

The Problem…

Applications where heavy vibration and pulsation were present required the use of either a conventional dry gauge with a hard to read pointer and a limited life costly liquid-filled gauge and all the head-aches that come with them.

The Solution…

An exclusive, breakthrough technology developed for Ashcroft pressure instruments providing virtually liquid-filled performance in a dry gauge, the Ashcroft® ***PLUS!™*** **Performance** option.

How'd They Do That?…

The Patented Ashcroft® ***PLUS!™*** Performance option utilizes a unique cartridge to surround the pinion with an engineered dampening agent to dynamically dampen the pointer and movement, thereby providing a dry gauge which acts liquid-filled.

Benefits vs Liquid-filled…

- Dampens vibration and pulsation without the headaches of liquid-filled gauges.
- No liquid – no leaks!
- Easier to read…no fill lines!
- Easier to recalibrate
- Wider temperature range vs glycerin-fill
- Eliminates costly specialty fluids.

Benefits vs. Dry Gauges…

- Dampens vibration and pulsation
- Steady pointer – Easier to read!
- 100% longer life
- Reduce purchases by 50%!

Improved Plant Safety…

Safety is a critical issue and the ***PLUS!™*** **Performance** can improve the safety of your plant. Industry surveys indicate that 20% to 30% of customer's gauges are misapplied and prematurely fail due to pulsation and vibration. If a bourdon tube fails due to excessive pulsation, the process media will escape causing possible environmental damage, process contamination and more importantly, possible injury, fire or explosion.

PLUS!™ **Performance** improves safety and saves money by allowing facilities to standardize on a convenient dry ***PLUS!™*** gauge that performs virtually like a liquid-filled gauge. This saves 20% to 30% annually by reducing misapplied gauges, as well as reducing the risk of spills, injury and damage to their facility.

Any Questions?

A. Are PLUS!™ Performance gauges "new" gauges?

A. No. We simply enhanced the industry leading Ashcroft products you've grown to trust with a fluid clutch dampener. The mechanical system is unchanged.

Q. Does PLUS!™ Performance affect accuracy?

A. No. The only difference is that the response time is similar to liquid-filled gauges.

Q. Can these gauges be oxygen cleaned?

A. Yes. Our process cleans the system to meet AMSE B40.1, Level IV.

Q. What process range is possible?

A. –40°F to 250°F, –40°C to 121°C

Q. Can I use PLUS!™ Performance instead of Halocarbon fill?

A. Yes!

Q. Can this be used in paint applications or others requiring no silicone?

A. The standard ***PLUS!™*** Performance cannot be used in silicone-free applications. However, ***PLUS!™*** is available in a silicone-free version. Order as XNZ for silicone-free.

Q. Does the throttle plug do all the work?

A. No. Throttle plugs are designed only to fight pulsation. Vibration requires either a liquid-filled gauge or ***PLUS!™*** Performance.

Q. Does our competition have anything similar?

A. No. Some competitors use a liquidless gauge with poor results. Their design utilized a dashpot which caused premature failures versus even dry gauges. Gauges with ***PLUS!™*** Performance utilize a completely different approach over coming their design problem.

Q. Will this gauge last forever?

A. No gauge will last forever under conditions of severe pulsation and vibration. The ***PLUS!™*** Performance gauges simply last significantly longer than traditional dry gauges with the benefits outlined above. *There are a few applications, chiefly severe high frequency pulsation, where a liquid-filled gauge or a remote mounted gauge is necessary. With a few exceptions,* customers have found the performance to rival liquid-filled gauges in life expectancy without any of the headaches of liquid-filled gauges.

Q. How Do I Order?

A. The product variation "XLL" designates ***PLUS!™*** Performance in all Duragauge,® 1279, 1377, 1379, 2462 and Duralife® 1009, 1008S type pressure gauges and Duratran® transmitters.

ASHCROFT® PRODUCT QUICK GUIDES

COMMERCIAL GAUGES

Type 1005P, 1005, 1005S 29
Type 1001T Panel Gauge..... 29
Type 1008A/AL General Service Gauge..... 29
Type 1005M, XRG Agricultural Ammonia 29
Type 1005P, XUL Sprinkler Service Gauge ... 30
Type 1007P, XOR Refrigeration Manifold..... 30
Type 2071 Contractor Gauge..... 30
Type 23 DDG Minigauge..... 30
Type 12/15 DDG Direct Drive Gauge..... 31

DIAPHRAGM SEALS

THREADED

Type 100/200/300 33
Type 101/201/301 33
Type 400/401..... 33
Type 500/501..... 33
Type 740/741..... 33
Type 510..... 34
Type 510HP 34
Type 511..... 34
Type 511HP 34
Type 311..... 34
Type 312..... 35
Type 310/315..... 35
Type 330..... 35
Type 320/321..... 35
Type 104/204..... 35

FLANGED

Type 102/202/302 36
Type 103/203/303 36
Type 106/206..... 36
Type 402/403..... 36
Type 702/703..... 36

IN-LINE

Type 105/205..... 37
Type 107/207..... 37
Type 108/208..... 37
Type 80/81..... 37
Type 85/86..... 37

TRANSDUCERS & TRANSMITTERS

GC31 Pressure Sensor 39
GC35 Pressure Sensor 39
GC51 Transmitter 39
GC55 Transducer..... 39
A2 Explosion Proof Transmitters 40
A2X Explosion Proof Transmitters 40
A4 Explosion Proof Transmitters 40
H2 Precision Pressure Transducer 40
T2 High Performance Pressure Transducer . 41
G2 OEM Pressure Transducer..... 41
KM15 OEM Transducer..... 41
K1/K2 Series Industrial Transducer..... 41
K8 Series Transducer w/mV Signal..... 42
KX/KS Series Sanitary Transducers 42
GC30 Differential Sensor..... 42
GC52 Differential Transmitter..... 42
CXLdp Series..... 43
DXLdp Series..... 43
RXLdp Series..... 43
XLdp Series 43
IXLdp Series 44
2279 Duratran® Pressure Transmitters..... 44
DM61 Digital Panel Meter 44
Type 4080, 4480 Pneumatic Transmitter.....44

THERMOMETERS

Industrial Bimetal Thermometer..... 45
Duratemp® Thermometer 45

PRESSURE & TEMPERATURE SWITCHES

B-Series Single Setpoint Watertight 47
B-Series Single Setpoint Explosion Proof.... 47
L-Series Dual Setpoint Watertight..... 47
P-Series Dual Setpoint Explosion Proof..... 47
G-Series Watertight Stainless Steel..... 48
F-Series Compact Explosion Proof Pressure 48
A-Series Miniature Watertight
Pressure Switches..... 48
A-Series Miniature Explosion Proof
Pressure Switches 48
N-Series Electronic Pressure Switches..... 49
Differential Pressure Switch Actuator..... 49
ATEX Approval for Hazardous Locations 49
U.L. Listed Steam Limit Control..... 49
U.L. Listed Pressure Limit Control..... 50
DDS Series DP Switch Diaphragm
Sensing Element 50

ASHCROFT® PRODUCT QUICK GUIDES

DIGITAL GAUGES

Type 2089, 2086, 2084 Test Gauge 11
Type 2074, 2174, 2274 Industrial Gauge 11
Type DG25 General Purpose Gauge 11
Series 2030 Digital Sanitary Gauge 11

TEST INSTRUMENTS, TEST GAUGES & EQUIPMENT

Type 1084 Test Gauge..... 13
Type 1082 Test Gauge..... 13
Type 2089, 2086, 2084 Test Gauge..... 13
Type ATE-2 LCD Digital Calibrator 13
Type ST-2A LCD Digital Indicator..... 14
Type 1305D Deadweight Tester 14
Type 1327D, 1327CM Gauge Comparator 14
Type PT LCD Digital Indicator 14
Type AVC-1000 & 3000 Volume Controller ... 15
Type A4A Precision Dial Pressure Gauge 15

PROCESS GAUGES

Type 1279 Duragauge® Pressure Gauge 17
Type 1377 Duragauge® Pressure Gauge 17
Type 1379 Duragauge® Pressure Gauge 17
Type 2462 Pressure Gauge..... 17
Type 1259 Pressure Gauge..... 18
Type 1279,1379,1377, 2462 Receiver Gauge . 18

STAINLESS STEEL CASE & INDUSTRIAL GAUGES

Type T5500 & T6500 Stainless Steel Case ... 19
Type 1008S Pressure Gauge
40 & 50mm..... 19
63 & 100mm..... 19
Type 1008S/SL Center Back
Connect Gauges 19
Type 1009 Duralife® Pressure Gauge..... 20
Type 2008S/SL 63mm Panel Gauge..... 20
Type 1009 Stainless Steel Case 20
Type 1109 General Service Gauge 20
Type 1009, 1010, 1017, 1220
Hydraulic Gauges 21
Type 1009, 1010, 1017, 1220
Receiver Gauges 21
Type 1009, 1010, 1017, 1220
Refrigeration Gauge 21
Type 1010 General Service Gauge 21
Type 1017 General Service Gauge 22
Type 1220 22
Type 1020S Xmas Tree Gauge..... 22
Type 1038, 1039 Duplex Gauge..... 22
Type 1125, 1125A Differential Gauge..... 23
Type 1127, 1128 Differential Gauge..... 23
Type 1130 Differential Gauge..... 23
Type 1131 Differential Gauge..... 23
Type 1132 Differential Gauge..... 24
Type 1133 Differential Gauge..... 24
Type 1134 Differential Gauge..... 24
Type 5503 Differential Gauge..... 24
Type 5509 Differential Gauge..... 25
Type 1150H Reid Vapor Gauge 25
Type 1122 Movementless Gauge..... 25
Type 1187, 1188, 1189 LP Bellows Gauge ... 25
Type 1490 LP Diaphragm Gauge..... 26
Type 1495 LP Receiver Gauge..... 26
Type 2074, 2174, 2274 Industrial Gauge..... 26
Type DG25 General Purpose Gauge 26

SANITARY GAUGES

Series 2300 Digital Sanitary Gauge.....27
Type 1032 Fractional Sanitary Gauge..... 27
Type 1032 Sanitary Gauge..... 27
Type 1036 w/1037 Instrument Fitting 27

ASHCROFT®

Quick Guide
Digital Gauges

TYPES 2089, 2086, 2084 PRECISION DIGITAL TEST GAUGE

ACCURACY
±0.05%, 0.10% or 0.25% of span

CASE SIZE
3″

CASE MATERIAL
300 Series stainless steel

WETTED MATERIALS
316 stainless steel

SOCKET SIZE
1/4 NPT, 1/8 NPT
(others on application)

CONNECTION
Lower (6 o'clock), top, side

RANGES
Vac., 5 psi thru 7000 psi including compound and absolute

POWER SOURCE
Three AAA alkaline batteries

BATTERY LIFE
1000 hrs.

OPERATING TEMPERATURE
Temperature corrected from 0/150°F (–18/63°C)

STORAGE TEMPERATURE
–40/180°F (–40/82°C)

AGENCY APPROVALS
CE, EN 50082-1 (1997), FM, CSA

LOOK FOR THESE MARKS ON OUR PRODUCTS

Refer to page no. 54, 62

With total error band accuracy including temperature from 0/150°F (–18 to 63°C) applications include metrology labs, gas distribution and transmission and analog test gauge users.

TYPES 2074, 2174, 2274 INDUSTRIAL DIGITAL GAUGE

ACCURACY:
±0.25% of span

CASE SIZE
3,″ 4 1/2″

CASE MATERIAL
(3″) 300 series stainless steel
(4 1/2″) fiberglass reinforced thermoplastic
(4 1/2″) black painted aluminum

WETTED MATERIALS
17-4 PH stainless steel sensor;
316 stainless steel socket

SOCKET SIZE
1/4 NPT, 1/2 NPT (4 1/2″ case only)
Others on application

CONNECTION
Lower (6 o'clock), top, side

RANGES
Vac. and 15 psi thru 20,000 psi including compound

POWER SOURCE
Battery
(3″) Two AA alkaline batteries
(4 1/2″) Two C alkaline batteries
Loop powered 4-20mA
Line powered, (12-36 Vdc, 1 amp)

BATTERY LIFE
(3″) 500 hrs.
(4 1/2″) 2500 hrs.

OPERATING TEMPERATURE
14/140°F (–10/60°C)

STORAGE TEMPERATURE
–4/158°F (–20/70°C)

AGENCY APPROVALS
CE, EN 50082-1 (1997) optional, FM, CSA

LOOK FOR THESE MARKS ON OUR PRODUCTS

Refer to page no. 55, 99

Available with optional (1) or (2) SPDT switches and 4-20mA output, this gauge is ideal for many industrial applications. This product eliminates the need for unnecessary piping, switches and transducers.

TYPE DG25 GENERAL PURPOSE DIGITAL GAUGE

*Protective Boot Optional

ACCURACY
±0.5% of span or ±0.25% span

CASE SIZE
2 1/2″

CASE MATERIAL
Polycarbonate/ABS

WETTED MATERIALS
17-4 PH stainless steel sensor;
316 stainless steel socket

SOCKET SIZE
1/4 NPT, 1/8 NPT, G 1/4A, G 1/4B, 9/16-18 UNF
Others on application

CONNECTION
Lower

RANGES
Vac. thru 25,000 psi, including compound

POWER SOURCE
Two AA alkaline batteries

BATTERY LIFE
2000 hrs.

OPERATING TEMPERATURE (Media)
–4/176°F (–20/80°C)

STORAGE TEMPERATURE (Batteries Removed)
–4/140°F (–20/00°C)

AGENCY APPROVALS
CE, EN 61326 (1998)
CE, EN 61326 Annex A (heavy industrial)
UL-61010-1

LOOK FOR THIS MARK ON OUR PRODUCT

Refer to page no. 56, 117

This product is an excellent choice for a wide variety of pressure measurement applications. When compared to mechanical gauges the DG25 offers overall enhanced value.

TYPE 2030 SERIES DIGITAL SANITARY GAUGE

ACCURACY
±0.25% of span terminal point accuracy

DIAL SIZE
3″

CASE MATERIAL/FINISH
(3″) 300 series SS, electropolished

WETTED MATERIALS
316L stainless steel

TRI-CLAMP CONNECTION
Direct, in-line 1.5″, 2.0″; Ashcroft remote in-line (XRE)

RANGES
15 psi thru 1000 psi including metric, compound and vacuum

POWER SOURCE
2032 Battery
2132 4-20mA loop powered
2232 12-36 Vdc

BATTERY LIFE
500 hrs.

OPERATING TEMPERATURE
14°F/140°F (–10°C/60°C)

STORAGE TEMPERATURE
–4°F/158°F (–20°C/70°C)

LOOK FOR THIS MARK ON OUR PRODUCT

Refer to page no. 53, 121

Sanitary pharmaceutical, biotech or food applications requiring Tri-Clover type fittings and highly polished stainless steel surfaces.

ASHCROFT®

Quick Guide
Test Instruments

1084, 3″ TEST GAUGE

ACCURACY
ASME B 40.100 Grade 2A (±0.5% of span)

DIAL SIZE
3″

CASE MATERIAL
300 series polished stainless steel

MATERIAL
316 stainless steel

SENSING ELEMENT
Bourdon tube

CONNECTION
1/4 NPT lower only

RANGES
Vac. to 1000 psi

Refer to page no. 61

Ideal for use when a quality analog pocket test gauge is required.

1082, 4½,″ 6,″ 8½″ TEST GAUGE

ACCURACY
ASME B 40.100 Grade 3A (±0.25% of span)

DIAL SIZE
4½,″ 6,″ 8½″

CASE MATERIAL
Aluminum, phenolic, polypropylene

WETTED MATERIAL
Bronze/brass, Monel

SENSING ELEMENT
Bourdon tube

CONNECTION
1/4 NPT (standard) and
1/2 NPT lower or back (optional)

RANGES
Vac. to 10,000 psi

TEMPERATURE ERROR
<.005% per degree F above or below reference temperature of 68°F (20°C)

Refer to page no. 60

1/4% full scale accuracy for test and laboratory applications.

TYPES 2089, 2086, 2084 PRECISION DIGITAL TEST GAUGES

ACCURACY
±0.05%, 0.10% or 0.25% of span

CASE SIZE
3″

CASE MATERIAL
300 Series stainless steel

WETTED MATERIALS
316 stainless steel

SOCKET SIZE
1/4 NPT, 1/8 NPT
(others on application)

CONNECTION
Lower (6 o'clock), top, side

RANGES
Vac., 5 psi thru 7000 psi including compound and absolute

POWER SOURCE
Three AAA alkaline batteries

BATTERY LIFE
1000 hrs.

OPERATING TEMPERATURE
Temperature corrected from 0/150°F (–18/63°C)

STORAGE TEMPERATURE
–40/180°F (–40/82°C)

AGENCY APPROVALS
CE, EN 50082-1 (1997), FM, CSA

LOOK FOR THESE MARKS ON OUR PRODUCTS

Refer to page no. 54, 62

Superior accuracy for test and laboratory applications.

TYPE ATE-2 LCD DIGITAL CALIBRATOR

LOOK FOR THESE AGENCY MARKS ON OUR PRODUCTS

PRESSURE MEASUREMENT ACCURACY
±0.025, 0.05 and 0.1% of span

PRESSURE RANGES
0/0.25 in.H_2O through 0/10,000 psi

PRESSURE TYPES
Gauge, compound, vacuum, absolute and differential

TEMPERATURE COMPENSATION
20-120°F

TEMPERATURE MEASUREMENT
Supports most common RTD-type temperature probes and thermocouples

DIMENSIONS
8.7 in. (L) x 5.1 in. (W) x 3.8 in. (H)

WEIGHT
Max. 2.4 lbs. w/2 pressure modules installed

CASE MATERIAL
High impact PC-ABS

SENSOR MODULE CAPACITY
2 bays for Ashcroft AM2 sensor modules

DISPLAY
1.5″ x 2.5″ graphic LCD display with backlight. Can display readings from 2 simultaneous modules

ELECTRICAL CONNECTION
4mm banana jacks (one set of test leads provided with each ATE-2)

UPDATE RATE
100 ms (nominal) with one module installed

RESOLUTION
±0.0015% of span, 66,000 counts (max)

DAMPING
Programmable filtering levels one through 16

SERIAL INTERFACE
Type: USB

AGENCY APPROVALS
Standard: CE, UL, FCC
Optional: FM, CSA, ATEX

Refer to page nos. 63 and 64

Field or laboratory precision pressure standard for calibrating or setting other instruments and devices. Also used for high accuracy temperature or pressure measurement in critical processes.

ASHCROFT®

Quick Guide
Test Instruments

ST-2A LCD DIGITAL INDICATOR

PRESSURE MEASUREMENT ACCURACY
±0.025, 0.05 and 0.1% of span

PRESSURE RANGES
0/0.25 in.H_2O through 0/10,000 psi

PRESSURE TYPES
Gauge, compound, vacuum, absolute and differential

TEMPERATURE COMPENSATION
20-120°F

TEMPERATURE MEASUREMENT
Supports most common RTD-type temperature probes and thermocouples

DIMENSIONS
10.9 in. (L) x 6.74 in. (W) x 4.0 in. (H)

PANEL CUTOUT
6.56 in. x 3.53 in.

WEIGHT
Max. 4.08 lbs. w/2 pressure modules installed

CASE MATERIAL
High impact ABS

SENSOR MODULE CAPACITY
2 bays for Ashcroft AQS "Quick Select®" sensor modules

DISPLAY
2 line LCD, 0.37 in. height per line. Can display simultaneous readings from 2 modules.

ELECTRICAL CONNECTION
Standard banana jacks

OPERATING TEMPERATURE RANGE
32° to 120°F

UPDATE RATE
130 ms (nominal) with one sensor installed

RESOLUTION
±0.002% of span, 60,000 counts (max)

ELECTRICAL MEASUREMENTS
0-20 mA or 0-30 Vdc

Refer to page nos. 65 and 66

Laboratory precision pressure standard for calibrating or setting other instruments and devices. Also used for high accuracy temperature or pressure measurement in critical processes.

TYPE 1305D DEADWEIGHT TESTER

ACCURACY
±0.1% of reading

OPERATING PRESSURE
15 psi to 10,000 psi

OPERATING MEDIA
1305D: SAE 20 weight automotive or machine oil

1305DH
Phosphate-based or glycol fluids

O-RING MATERIAL
1305D: Buna-N (D series)
1305DH: Ethylene Propylene (DH Series)

PISTON AND CYLINDER MATERIAL
Stainless steel

WEIGHT MATERIAL
Non-magnetic die cast zinc

RESERVOIR VOLUME
Approximately 1.5 pints (0.7 liter)

Special "CD-5" Certification package available (see Price Sheet TE/PS-1)

Refer to page no. 67

Primary deadweight pressure standard and hydraulic pressure source for calibration of other pressure instruments.

TYPE 1327D, 1327CM GAUGE COMPARATOR

OPERATING PRESSURE
0-10,000 psi (maximum) (0-60,000 kPa)

OPERATING MEDIA
Std.: SAE 20 weight automotive or machine oil
Opt.: Phosphate-based or glycol fluids
Distilled water for oxygen service

O-RING MATERIAL
Standard: Buna N (D Series)
Optional: Ethylene Propylene (DH Series)

RESERVOIR VOLUME
Approximately 1.5 pints (0.7 liter)

SPECIFICATIONS TYPE 1327DG

ACCURACY
±0.25% F.S.

GAUGE TYPE
Ashcroft 4½ inch Type 1082 gauges with temperature compensation

Special "CD-4" Certification package available (see Price Sheet TE/PS-1)

SPECIFICATIONS TYPE 1327CM

ACCURACY
±0.1% F.S.

GAUGE TYPE
Ashcroft 6-inch Type A4A with temperature compensation

TEMPERATURE COMPENSATION
–25°F to +125°F (will maintain ±0.1% F.S. accuracy)

Refer to page no. 68

Primary deadweight pressure standard and hydraulic pressure source for calibration of other pressure instruments.

MODEL PT, DUAL DISPLAY LCD DIGITAL INDICATOR

PRESSURE MEASUREMENT ACCURACY
±0.025, 0.05 and 0.1% of span

PRESSURE RANGES
0/0.25 in.H_2O through 0/10,000 psi

PRESSURE TYPES
Gauge, compound, vacuum, absolute and differential

TEMPERATURE MEASUREMENT
Supports most common RTD-type temperature probes

DIMENSIONS
7.72 in. (L) x 6 in. (W) x 2.95 in. (H)

PANEL CUTOUT
5.4 in. x 2.68 in.

WEIGHT
Depending on configuration
Max. <4 lbs. w/2 sensors and battery pack

CASE MATERIAL
High impact ABS

SENSOR CAPACITY
2 bays for Ashcroft PPT sensors

DISPLAY
5 digit, 2 line LCD, 0.38 in. height per line. Can display simultaneous readings from 2 modules.

OUTPUT
Full function RS-232

OPTIONS
Backlit Display; Built-in NiCad Rechargeable Batteries; Handle; Panel Mounting Brackets

OPERATING TEMPERATURE RANGE
32° to 120°F

TEMPERATURE COMPENSATION
20-120°F

UPDATE RATE
130 ms (nominal) with one sensor installed

RESOLUTION
±0.002% of span, 60,000 counts (max)

Refer to page nos. 69 and 70

Laboratory precision pressure standard for calibrating or setting other instruments and devices. Also used for high accuracy temperature or pressure measurement in critical processes.

ASHCROFT®

TYPE AVC-1000 & 3000 VOLUME CONTROLLER

TYPE
AVC-1000 / AVC-3000

RANGE (psi)
vacuum-1000 / vacuum-3000

RESOLUTION (psi)
0.00025 / 0.0005

VOLUME CHANGE (cubic inches)
3.5 / 2.5

MECHANICAL ROTATION (turns)
31 / 61

PROOF PRESSURE (psi)
3000 / 6000

BURST PRESSURE (psi)
6000 min / 12,000 min

OPERATING TEMPERATURE RANGE
20-120°F / 20-120°F

OPERATING MEDIA
Clean, dry noncorrosive gas such as compressed air or nitrogen

CONSTRUCTION
Aluminum body, stainless steel, brass
Teflon, Delrin and Buna N

Refer to page no. 71

Added to any pneumatic calibration system, the VC works as a "fine tune" device to achieve specific test points not easily attained with the use of a regulator alone. Used in the calibration of any pneumatic pressure instrument up to 3000 psi.

TYPE A4A PRECISION DIAL PRESSURE GAUGE

ACCURACY
±0.10% of span – ASME B40.1, Grade 4A

CASE
Cast aluminum solid front

DIAL SIZE
6˝, 8½˝, 12˝ & 16˝

POINTER TRAVEL
350° (15-30,000 psi)
300° (40,000-50,000 psi)
270° (60,000-100,000 psi)

BOURDON TUBE
Bleeder tipped

RANGES
Gauge, compound, vacuum & absolute
0-15-0/100,000 psi

Refer to page no. 59

ASHCROFT®

Quick Guide
Process Gauges

1279 DURAGAUGE® PRESSURE GAUGE

ACCURACY
ASME B 40.100 Grade 2A (±0.5% of span)

DIAL SIZE
4½″

CASE MATERIAL
Phenolic

WETTED MATERIAL
316 stainless steel, bronze/brass, Monel

SENSING ELEMENT
Bourdon tube

CONNECTION
½ NPT (standard) lower or back
¼ NPT (optional)

RANGES
Vacuum, 15 to 30,000 psi, compound

Refer to page nos. 76 and 81

Usage requiring ½% full scale accuracy in chemical, petrochemical, refinery, oil prodution, other process, power and general industry.

1377 DURAGAUGE® PRESSURE GAUGE

ACCURACY
ASME B 40.100 Grade 2A (±0.5% of span)

DIAL SIZE
4½″, 6″, 8½″

CASE MATERIAL
Aluminum

WETTED MATERIAL
316 stainless steel, bronze/brass, Monel

SENSING ELEMENT
Bourdon tube

CONNECTION
½ NPT (standard) lower or back
¼ NPT (optional)

RANGES
Vacuum, 15 to 30,000 psi, compound

Refer to page nos. 77 and 81

Usage requiring ½% full scale accuracy in chemical, petrochemical, refinery, oil prodution, other process, power and general industry.

1379 DURAGAUGE® PRESSURE GAUGE

ACCURACY
ASME B 40.100 Grade 2A (±0.5% of span)

DIAL SIZE
4½″, 6″, 8½″

CASE MATERIAL
Aluminum

WETTED MATERIAL
316 stainless steel, bronze/brass, Monel, Inconel

SENSING ELEMENT
Bourdon tube

CONNECTION
½ NPT (standard) lower or back
¼ NPT (optional)
¼″ HP connection over 30,000 psi

RANGES
Vacuum, 15 to 100,000 psi, compound

Refer to page nos. 78 and 81

Usage requiring ½% full scale accuracy in chemical, petrochemical, refinery, oil production, other process, power and general industry.

2462 DURAGAUGE® PRESSURE GAUGE

ACCURACY
ASME B 40.100 Grade 2A (±0.5% of span)

DIAL SIZE
6″

CASE MATERIAL
Polypropylene

WETTED MATERIAL
316 stainless steel, bronze/brass, steel, Monel

SENSING ELEMENT
Bourdon tube

CONNECTION
½ NPT (standard) lower or back
¼ NPT (optional)

RANGES
Vacuum, 15 to 30,000 psi, compound

Refer to page nos. 79 and 81

Usage requiring ½% full scale accuracy in chemical, petrochemical, refinery, oil production, other process, power and general industry.

1259 PROCESS PRESSURE GAUGE

ACCURACY
ASME B 40.100 Grade 2A (±0.5% of span)

DIAL SIZE
4½″

CASE MATERIAL
Polypropylene

WETTED MATERIAL
316 stainless steel, Monel

SENSING ELEMENT
Bourdon tube

CONNECTION
½ NPT (standard) lower
¼ NPT (optional)

RANGES
Vacuum, 15 to 20,000 psi, compound

Refer to page no. 80

Usage requiring ½% full scale accuracy in chemical, petrochemical, refinery, oil production, other process, power and`general industry.

1279, 1379, 1377, 2462 RECEIVER GAUGES

Type 1279

Type 2462

ACCURACY
ASME B 40.100 Grade 2A (±0.5% of span)

DIAL SIZES
1279AS-XPR – 4½″
1377AS-XPR – 4½″, 6″, 8½″
1379AS-XPR – 4½″, 6″, 8½″
2462AS-XPR – 6″

CASE MATERIAL
1279AS-XPR – Phenolic
1377AS-XPR – Aluminum
1379AS-XPR – Aluminum
2462AS-XPR – Polypropylene

SENSING ELEMENT
Bourdon tube

CONNECTION
½ NPT (standard)
¼ NPT (optional)

CONNCTION LOCATION
1279AS-XPR – Lower/Back, Back
1377AS-XPR – Back, Lower/Back
1379AS-XPR – Back, Lower/Back
2462AS-XPR – Lower/Back, Back

RANGES
3-15 psi & 3-27 psi

Refer to page no. 81

For use with pneumatic transmitters.

ASHCROFT®

Quick Guide Stainless Steel Case & Industrial Gauges

T5500 & T6500 PRESSURE GAUGE

ACCURACY
Std. Class 1, 1% full scale

DIAL SIZE
100mm, 160mm

CASE MATERIAL
304 stainless steel, 316 stainless steel

MOVEMENT
304/303 stainless steel

SENSING ELEMENT
Bourdon tube

CONNECTION
T5500 – lower or back, open front
T6500 – lower only, solid front

RANGES
Vacuum, compound, pressure
psi: –30in. Hg–0, 0-36,000 psi
bar: –1-0, 0-2500 bar

Refer to page no. 88

The Ashcroft® T5500 and T6500 all stainless steel process pressure gauge is one of the finest production gauges on the market for industrial use where precise indications are required

1008S 40 & 50 mm PRESSURE GAUGE

ACCURACY
ASME B 40.100 Grade B (±3-2-3% of span)

DIAL SIZE
40mm, 50mm

CASE MATERIAL
Stainless steel

WETTED MATERIAL
316 stainless steel

SENSING ELEMENT
Bourdon tube

CONNECTION
1/8 NPT lower or back
1/4 NPT lower or back

RANGES
Vac. to 15,000 psi

Available dry and glycerin filled

Refer to page no. 89

Applications include industrial compressors, valve indicators, firefighting equipment, measurement/control, metal working and hydraulic equipment. Especially suited for pneumatic controllers and transmitters located in corrosive environments.

1008S/SL 63 & 100mm PRESSURE GAUGE

ACCURACY
1.6% F. S.

DIAL SIZE
63mm, 100mm

CASE MATERIAL
Stainless steel

WETTED MATERIAL
316L stainless steel

SENSING ELEMENT
Bourdon tube

CONNECTION
1/8 NPT lower or lower back
1/4 NPT lower or lower back
1/2 NPT lower (100mm)
JIS, DIN, BSP sockets available

RANGES
Vac. to 15,000 psi

Available dry and glycerin filled

Refer to page no. 90

Applications include industrial compressors, firefighting equipment, measurement/control, metal working, hydraulic equipment and panel builders. Can be supplied EN837 compliant.

1008S/SL 63 & 100mm CENTER BACK CONNECT GAUGES

ACCURACY
ASME B 40.100 Grade B (±3-2-3% of span)

DIAL SIZE
63mm, 100mm

CASE MATERIAL
Stainless steel

WETTED MATERIAL
316L stainless steel

SENSING ELEMENT
Bourdon tube

CONNECTION
1/4 NPT center back

RANGES
Vac. to 20,000 psi

Refer to page no. 91

Applications include industrial compressors, firefighting equipment, measurement/control, metal working, hydraulic equipment and panel builders requiring center back connections.

ASHCROFT®

Quick Guide Stainless Steel Case & Industrial Gauges

1009 2½˝ & 3½˝ DURALIFE® PRESSURE GAUGE

ACCURACY
ASME B 40.100 Grade 1A (±1% of span)

DIAL SIZE
2½˝, 3½˝

CASE MATERIAL
Stainless steel

WETTED MATERIAL
316L stainless steel, Bourdon tube

SENSING ELEMENT
Bourdon tube

CONNECTION
⅛ NPT lower or lower back
¼ NPT lower or lower back
½ NPT lower (3½˝)
JIS, DIN, BSP, tube stub

RANGES
Vac. to 15,000 psi

Stainless steel and aluminum bronze sockets

Refer to page no. 93

For use on fluid power equipment in oil and gas production, construction, mining, machine tools, logging, pulp and paper, general industrial applications and panel builders.

2008S/SL 63mm PANEL GUAGE

ACCURACY
1.6% F. S.

DIAL SIZE
63mm

CASE MATERIAL
Stainless steel

WETTED MATERIAL
316L stainless steel

SENSING ELEMENT
Bourdon tube

CONNECTION
¼ NPT only lower back

RANGES
Vac., Compound 0-15,000 psi

Available dry and glycerin filled, with ***PLUS!*** Performance

Refer to page no. 92

The Ashcroft 2008S/SL was designed specifically for the rugged requirements of panel installation. Oil, gas, offshore, environmentally and process challenged applications are the target for these gauge markets.

1009 4½˝ & 6˝ STAINLESS STEEL CASE

ACCURACY
ASME B 40.100 Grade 1A (±1% of span)

DIAL SIZE
4½˝, 6˝

CASE MATERIAL
Stainless Steel

TUBE MATERIAL
Bronze, 316 stainless steel, Monel

SENSING ELEMENT
Bourdon tube

CONNECTION
¼ NPT lower or back
½ NPT lower or back

RANGES
Vac. to 30,000 psi

Refer to page no. 94

Stainless steel case Type 1009 applications include boilers, compressors, water blasting equipment, pharmaceutical and food processing equipment.

1109 4½˝ STAINLESS STEEL CASE

ACCURACY
ASME B 40.100 Grade 1A (±1% of span)

DIAL SIZE
4½˝

CASE MATERIAL
Stainless Steel

TUBE MATERIAL
316 stainless steel
Inconel

SENSING ELEMENT
Bourdon tube

CONNECTION
½ NPT lower, ¼ NPT lower (optional)
¼ NPT lower high pressure

RANGES
Vac. to 1500 psi / 2000-20,000 psi
50,000-100,000 psi

Refer to page no. 95

Stainless steel case Type 1109 applications include water jet or water blasting equipment, offshore platform, etc.

ASHCROFT®

Quick Guide Stainless Steel Case & Industrial Gauges

1009, 1010, 1017, 1220 HYDRAULIC GAUGES

1010 GAUGE SHOWN

ACCURACY
ASME B 40.100 Grade 1A (±1% of span)

DIAL SIZE
1009 – 4½,″ 6″
1010 – 4½,″ 6,″ 8½,″ 12″
1017 – 4½,″ 6″
1220 – 4½,″ 6,″ 8½″

CASE MATERIAL
Stainless steel, aluminum, phenolic

TUBE MATERIAL
Bronze, 316 stainless steel, Monel

SENSING ELEMENT
Bourdon tube

CONNECTION
¼ NPT lower or back
½ NPT lower or back

RANGES
Vac. to 30,000 psi

Refer to page no. 96

Uniquely designed for rigorous hydraulic services.

1009, 1010, 1017, 1220 RECEIVER GAUGES

1220 GAUGE SHOWN

ACCURACY
ASME B 40.100 Grade 1A (±1% of span)

DIAL SIZE
1009 – 4½,″ 6″
1010 – 4½,″ 6,″ 8½,″ 12″
1017 – 4½,″ 6″
1220 – 4½,″ 6,″ 8½″

CASE MATERIAL
Stainless steel, aluminum, phenolic

TUBE MATERIAL
Bronze, 316 stainless steel, Monel

SENSING ELEMENT
Bourdon tube

CONNECTION
¼ NPT lower or back
½ NPT lower or back

RANGES
3/15 and 3/27 psi

Refer to page no. 97

For monitoring pneumatic systems requiring percentage and/or square root readings.

1009, 1010, 1017, 1220 REFRIGERATION GAUGE

1010 GAUGE SHOWN

ACCURACY
ASME B 40.100 Grade 1A (±1% of span)

DIAL SIZE
1009 – 4½,″ 6″
1010 – 4½,″ 6,″ 8½,″ 12″
1017 – 4½,″ 6″
1220 – 4½,″ 6,″ 8½″

CASE MATERIAL
Stainless steel, aluminum, phenolic

TUBE MATERIAL
Bronze, stainless steel

SENSING ELEMENT
Bourdon tube

CONNECTION[1]
¼ NPT lower or back
½ NPT lower or back

RANGES
30 in.Hg Vac/150 psi, 30 in.Hg Vac/300 psi

[1] 1017 back connect only

Refer to page no. 98

For use on refrigeration equipment utilizing ammonia, freon or other refrigerants.

1010 4½,″ 6,″ 8½,″ 12″ GENERAL SERVICE GAUGE

ACCURACY
ASME B 40.100 Grade 1A (±1% of span)

DIAL SIZE
4½,″ 6,″ 8½,″ 12″

CASE MATERIAL
Stainless steel, aluminum, phenolic

TUBE MATERIAL
Bronze, stainless steel, Monel

SENSING ELEMENT
Bourdon tube

CONNECTION
¼ NPT lower or back
½ NPT lower or back

RANGES
Vac. to 30,000 psi

Refer to page no. 100

General industrial applications requiring larger dials. Applications include oil monitoring, repair and compressors, etc.

ASHCROFT®

Quick Guide Stainless Steel Case & Industrial Gauges

1017 4½,″ 6″ GENERAL SERVICE GAUGE

ACCURACY
ASME B 40.100 Grade 1A (±1% of span)

DIAL SIZE
4½,″ 6″

CASE MATERIAL
Stainless steel, aluminum, phenolic

TUBE MATERIAL
Bronze, stainless steel, Monel

SENSING ELEMENT
Bourdon tube

CONNECTION
¼ NPT back
½ NPT back

RANGES
Vac. to 30,000 psi

Refer to page no. 101

General industrial applications, large dials for easier readings. used on pumps, air or oil monitoring, etc. for panel mount applications.

1220 4½,″ 6,″ 8½″ GENERAL SERVICE GAUGE

ACCURACY
ASME B 40.100 Grade 1A (±1% of span)

DIAL SIZE
4½,″ 6,″ 8½″

CASE MATERIAL
Stainless steel, aluminum, phenolic

TUBE MATERIAL
Bronze, stainless steel, Monel

SENSING ELEMENT
Bourdon tube

CONNECTION
¼ NPT lower or back
½ NPT lower or back

RANGES
Vac. to 30,000 psi

Refer to page no. 102

General industrial applications, large dials for easier readings. used on pumps, air or oil monitoring, etc.

1020S 4½″ XMAS TREE GAUGE

ACCURACY
ASME B 40.100 Grade 1A (±1% of span)

DIAL SIZE
4½″

CASE MATERIAL
Stainless steel

TUBE MATERIAL
316 stainless steel

SENSING ELEMENT
Bourdon tube

CONNECTION
Lower

RANGES
Up to 20,000 psi – ½ NPT, ¼ NPT

Refer to page no. 103

Uniquely designed to meet rugged oil field applications.

1038, 1339 3½,″ 4½,″ DUPLEX GAUGE

1038 GAUGES SHOWN

ACCURACY
ASME B 40.100 Grade A (±2-1-2% of span)

DIAL SIZE
3½,″ 4½″

CASE MATERIAL
Aluminum, cast iron

TUBE MATERIAL
Bronze

SENSING ELEMENT
Bourdon tube

CONNECTION
Lower/back

RANGES
1038A – 3½,″ 4½″ – ¼ NPT 30/1000 psi
1339A – 4½″ – ¼ NPT 30/1000 psi
Back conn. only

Refer to page no. 104

Uniquely designed to indicate two related pressures on the same dial.

ASHCROFT®

Quick Guide Stainless Steel Case & Industrial Gauges

1125, 1125A 4½˝ DIFFERENTIAL GAUGE

ACCURACY
ASME B 40.100 Grade A (±2-1-2% of span)

DIAL SIZE
4½˝

CASE MATERIAL
Aluminum

TUBE MATERIAL
Bronze

SENSING ELEMENT
Bourdon tube

CONNECTION
Lower/back

RANGES
1125 – 4½˝ 6˝[1] – ¼ NPT 20/1000 psi
1125A – 4½˝ 6˝[1] – ¼ NPT 10/0/10 psi-500/0/500 psi

[1] Lower connect only

Refer to page no. 105

Application include filter monitoring, flow, leak and level measurements.

1127, 1128 4½˝, 6˝ DIFFERENTIAL GAUGE

ACCURACY
ASME B 40.100 Grade A (±2-1-2% of span)

DIAL SIZE
4½˝, 6˝

CASE MATERIAL
Aluminum

TUBE MATERIAL
316 stainless steel

SENSING ELEMENT
Bourdon tube

CONNECTION
Lower

RANGES
1127 – 4½˝, 6˝ – ¼ NPT 10/1000 psi
1128 – 4½˝, 6˝ – ¼ NPT 10/0/00 psi-400/0/400 psi

Refer to page no. 106

Application include filter monitoring, flow, leak and level measurements.

1130 2˝, 2½˝, 3½˝, 4˝, 4½˝, 6˝ DIFFERENTIAL GAUGE

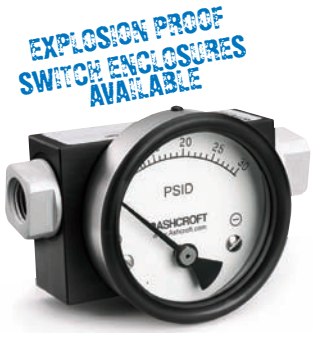

ACCURACY
±2% ascending

DIAL SIZE
2˝, 2½˝, 3½˝, 4˝, 4½˝, 6˝

CASE MATERIAL
Stainless steel

BODY MATERIAL
Aluminum, brass, stainless steel

SENSING ELEMENT
Piston

CONNECTION
In-line, lower, back

RANGES
0-5 psid to 150 psid

Refer to page no. 107

Applications include filter monitoring, flow, leak and level measurement. High pressure, high differential with migration.

1131 2½˝, 3½˝, 4˝, 4½˝, 6˝ DIFFERENTIAL GAUGE

ACCURACY
±2% ascending

DIAL SIZE
2½˝, 3½˝, 4˝, 4½˝, 6˝

CASE MATERIAL
Stainless steel

BODY MATERIAL
Aluminum, brass, stainless steel

SENSING ELEMENT
Rolling diaphragm

CONNECTION
In-line, lower, back

RANGES
0-5 psid to 100 psid

Refer to page no. 108

Applications include filter monitoring, flow, leak and level measurement. High pressure, high differential, no migration.

ASHCROFT®

Quick Guide Stainless Steel Case & Industrial Gauges

1132 2½,″ 3½,″ 4,″ 4½,″ 6″ DIFFERENTIAL GAUGE

EXPLOSION PROOF SWITCH ENCLOSURES AVAILABLE

ACCURACY
±2% ascending

DIAL SIZE
2½,″ 3½,″ 4,″ 4½,″ 6″

CASE MATERIAL
Stainless steel

BODY MATERIAL
Aluminum, brass, stainless steel

SENSING ELEMENT
Convoluted diaphragm

CONNECTION
In-line, lower, back

RANGES
0-1 psid to 60 psid
(including inches of water ranges)

Refer to page no. 109

Applications include filter monitoring, flow, leak and level measurement. High pressure, high differential, no migration.

1133 3½,″ 4,″ 4½,″ 6″ DIFFERENTIAL GAUGE

ACCURACY
±2% ascending

DIAL SIZE
3½,″ 4,″ 4½,″ 6″

CASE MATERIAL
Stainless steel

BODY MATERIAL
Aluminum, stainless steel

SENSING ELEMENT
Convoluted diaphragm

CONNECTION
In-line, lower, back

RANGES
0-1 IWD to 25 IWD

Refer to page no. 110

Applications include filter monitoring, flow, leak and level measurement. High pressure, high differential, no migration.

1134 4½″ DIFFERENTIAL GAUGE

ACCURACY
±3% ascending

DIAL SIZE
4½″

CASE MATERIAL
Stainless steel

BODY MATERIAL
Glass filled nylon

SENSING ELEMENT
Convoluted diaphragm

CONNECTION
Dual (In-line or back)

RANGES
0-0.6 IWD to 60 IWD

Refer to page no. 111

Applications include fume hoods, air handlers, filter monitoring, flow and level. Inches of water with no migration.

5503 100mm &160mm DIFFERENTIAL GAUGE

ACCURACY
±1.6% of span

DIAL SIZE
100mm, 160mm

CASE MATERIAL
Stainless steel

SENSING MATERIAL
316 stainless steel

SENSING ELEMENT
Diaphragm

CONNECTION
Lower

RANGES
0-16 IWD to 400 psid

Refer to page no. 112

Applications include filter monitoring, flow, leak and level measurement requiring high recovery, all stainless steel.

ASHCROFT®

Quick Guide Stainless Steel Case & Industrial Gauges

5509 100mm &160mm DIFFERENTIAL GAUGE

ACCURACY
±2.5% of span

DIAL SIZE
100mm, 160mm

CASE MATERIAL
Stainless steel

SENSING MATERIAL
316 stainless steel

SENSING ELEMENT
Diaphragm

CONNECTION
Lower

RANGES
0-10 IWD to 400 psid

Refer to page no. 113

Applications include filter monitoring, flow, leak and level measurement requiring high recovery, all stainless steel.

1150H 4½˝ REID VAPOR GAUGE

ACCURACY
ASME B 40.100 Grade 2A (±0.5% of span)

DIAL SIZE
4½˝

CASE MATERIAL
Aluminum

TUBE MATERIAL
316 stainless steel

SENSING ELEMENT
Bourdon tube

CONNECTION
¼ NPT lower

RANGES
15/600 psi

Refer to page no. 114

Uniquely designed for testing petroleum products with the Reid vapor process.

1122, 2½˝ GAUGE

ACCURACY
ASME B 40.100 Grade A (±2-1-2% of span)

DIAL SIZE
2½˝

CASE MATERIAL
Stainless steel

TUBE MATERIAL
Stainless steel

SENSING ELEMENT
Bourdon tube

CONNECTION
¼ NPT lower

RANGES
15/1000 psi

Refer to page no. 114

Applications include compressors, pumps and turbines.

1187, 1188, 1189 LOW PRESSURE BELLOWS GAUGES

1188 GAUGE SHOWN

ACCURACY
ASME B 40.100 Grade A (±2-1-2% of span)
Available with optional ASME B40.100 Grade 1A (1% of span)

DIAL SIZE
1187[1] – 4½˝
1188 – 4½˝
1189[2] – 4½˝, 6˝

CASE MATERIAL
Aluminum, phenolic

TUBE MATERIAL
Brass, 316 stainless steel, Monel

SENSING ELEMENT
Bellows

CONNECTION
1187 – ¼, ½ NPT back
1188 – ¼, ½ NPT lower or back
1189 – ¼, ½ NPT lower

RANGES
10 in.H_2O to 10 psi including vacuum and compound

[1] Back connect only
[2] Lower connect only

Refer to page no. 115

Low pressure monitoring for general industrial applications on air, liquids or gases.

ASHCROFT®

Quick Guide Stainless Steel Case & Industrial Gauges

1490, 2½,˝ 3½˝ LOW PRESSURE DIAPHRAGM GAUGE

ACCURACY
ASME B 40.100 Grade A (±2-1-2% of span)
Available with optional ASME B40.100 Grade 1A (1% of span)

DIAL SIZE
2½,˝ 3½˝

CASE MATERIAL
Polysulfone

WETTED MATERIAL
Copper, Brass, Polysulfone, RTV, Silicone

SENSING ELEMENT
Diaphragm

CONNECTION
⅛ NPT lower or center back
¼ NPT lower or center back
Hose barb

RANGES
0/10 in.H_2O to 0/15 psi including vacuum and compound

Refer to page no. 116

Low pressure monitoring of gases including ovens, burners or medical applications.

1495, 2½,˝ 3½˝ LOW PRESSURE RECEIVER GAUGE

ACCURACY
ASME B 40.100 Grade A (±2-1-2% of span)
Available with optional ASME B40.100 Grade 1A (1% of span)

DIAL SIZE
2½,˝ 3½˝

CASE MATERIAL
Polysulfone

WETTED MATERIAL
Copper, Brass, Polysulfone, RTV, Silicone

SENSING ELEMENT
Diaphragm

CONNECTION
⅛ NPT lower or center back
¼ NPT lower or center back
Hose barb

RANGES
0-100%, 0-10 sq rt
0/10 sq rt /0-100 linear

Refer to page no. 117

Low pressure monitoring of pneumatic or air handling systems requiring linear or square root readings.

TYPES 2074, 2174, 2274 INDUSTRIAL DIGITAL GAUGE

ACCURACY:
±0.25% of span

CASE SIZE
3,˝ 4½˝

CASE MATERIAL
(3˝) 300 series stainless steel
(4½˝) fiberglass reinforced thermoplastic
(4½˝) black painted aluminum

WETTED MATERIALS
17-4 PH stainless steel sensor;
316 stainless steel socket

SOCKET SIZE
¼ NPT, ½ NPT (4½˝ case only)
Others on application

CONNECTION
Lower (6 o'clock), top, side

RANGES
Vac. and 15 psi thru 20,000 psi including compound

POWER SOURCE
Battery
(3˝) Two AA alkaline batteries
(4½˝) Two C alkaline batteries
Loop powered 4-20mA
Line powered, (12-36 Vdc, 1 amp)

BATTERY LIFE
(3˝) 500 hrs.
(4½˝) 2500 hrs.

OPERATING TEMPERATURE
14/140°F (–10/60°C)

STORAGE TEMPERATURE
–4/158°F (–20/70°C)

AGENCY APPROVALS
CE, EN 50082-1 (1997) optional, FM, CSA

LOOK FOR THESE MARKS ON OUR PRODUCTS

Refer to page no. 55, 99

Available with optional (1) or (2) SPDT switches and 4-20mA output, this gauge is ideal for many industrial applications. This product eliminates the need for unnecessary instrument T's, when switches and/or 40-20mA output is a requirement.

TYPE DG25 GENERAL PURPOSE DIGITAL GAUGE

*Protective Boot Optional

ACCURACY
±0.5% of span or ±0.25% span

CASE SIZE
2½˝

CASE MATERIAL
Polycarbonate/ABS

WETTED MATERIALS
17-4 PH stainless steel sensor;
316 stainless steel socket

SOCKET SIZE
¼ NPT, ⅛ NPT, G¼A, G¼B, 9/16-18 UNF
Others on application

CONNECTION
Lower

RANGES
Vac. thru 25,000 psi, including compound

POWER SOURCE
Two AA alkaline batteries

BATTERY LIFE
2000 hrs.

OPERATING TEMPERATURE (Media)
–4/176°F (–20/80°C)

STORAGE TEMPERATURE (Batteries Removed)
–4/140°F (–20/00°C)

AGENCY APPROVALS
CE, EN 61326 (1998)
CE, EN 61326 Annex A (heavy industrial)
UL-61010-1

LOOK FOR THIS MARK ON OUR PRODUCT

Refer to page no. 56, 117

This product is an excellent choice for a wide variety of pressure measurement applications. When compared to mechanical gauges the DG25 offers overall enhanced value.

ASHCROFT®

Quick Guide
Sanitary Gauges

TYPE 2030 SERIES DIGITAL SANITARY GAUGE

ACCURACY
±0.25% of span terminal point accuracy

DIAL SIZE
3″

CASE MATERIAL/FINISH
(3″) 300 series SS, electropolished

WETTED MATERIALS
316L stainless steel

TRI-CLAMP CONNECTION
Direct, in-line 1.5″, 2.0″; Ashcroft remote in-line (XRE)

RANGES
15 psi thru 1000 psi including metric, compound and vacuum

POWER SOURCE
2032 Battery
2132 4-20mA loop powered
2232 12-36 Vdc

BATTERY LIFE
500 hrs.

OPERATING TEMPERATURE
14°F/140°F (–10°C/60°C)

STORAGE TEMPERATURE
–4°F/158°F (–20°C/70°C)

LOOK FOR THIS MARK ON OUR PRODUCT

Refer to page no. 53, 121

Sanitary pharmaceutical, biotech or food applications requiring Tri-Clamp® type fittings and highly polished stainless steel surfaces.

TYPE 1032 FRACTIONAL SANITARY GAUGE

ACCURACY
±3% upscale accuracy; up to ±5% downscale accuracy

DIAL SIZE
2″ only

CASE & RING MATERIAL
300 series stainless steel

TUBE & SOCKET MATERIAL
316 stainless steel

WETTED PARTS
Electropolished 12 to 20RA surface finish
316 stainless steel

MOUNTING CONNECTION
Lower (¾″ Tri-Clamp®) only

RANGES
30# thru 600#, including compound

Meets EN 10204 : 2004 3.1 requirement for material traceability; documents provided as standard

Refer to page no. 124

Sanitary pharmaceutical, biotech or food applications requiring Tri-Clamp® type fittings and highly polished stainless steel surfaces. Can be autoclaved. Standard window glass.

TYPE 1032 SANITARY GAUGE

ACCURACY
2½″, 3½″, 4½″ – ±1.5% F.S. for pressure ranges 100 psi and above. ±2.0% F.S. for vacuum, compound and ranges below 100 psi

DIAL SIZE
2½″, 3½″, 4½″

CASE & RING MATERIAL
300 series stainless steel

TUBE & SOCKET MATERIAL
316 stainless steel

WETTED PARTS
Electropolished 12 to 20 RA surface finish
316 stainless steel

MOUNTING CONNECTION
Lower and back (1½″ or 2″ Tri-Clamp®)

RANGES
15# thru 1000#, including compound and vacuum

Meets EN 10204 : 2004 3.1 requirement for material traceability; documents provided as standard

Refer to page no. 122

Sanitary pharmaceutical, biotech or food applications requiring Tri-Clamp® type fittings and highly polished stainless steel surfaces. Can be autoclaved with polysulfone window.

TYPE 1036 SANITARY GAUGE with TYPE 1037 SANITARY INSTRUMENT FITTING

TYPE 1036 SANITARY GAUGE

ACCURACY
±1.5% F.S. for pressure ranges 100 psi and above. ±2.0% F.S. for vacuum, compound and ranges below 100 psi

DIAL SIZE
3½″

CASE & RING MATERIAL
300 series stainless steel

TUBE & SOCKET MATERIAL
316 stainless steel

WETTED PARTS
Electropolished 12 to 20 RA surface finish
316 stainless steel

MOUNTING CONNECTION
Lower, back (1½″ Tri-Clamp®)

RANGES
15# thru 1000#, including compound and vacuum

TYPE 1037 INSTRUMENT FITTING

CONSTRUCTION
316 L stainless steel

WETTED PARTS
Electropolished 12 to 20RA surface finish

MOUNTING CONNECTION
(½″ thru 2″ Tri-Clamp®)

HEAT NUMBER
Stamped on fitting

Meets EN 10204 : 2004 3.1 requirement for material traceability; documents provided as standard

Refer to page no. 123

Sanitary pharmaceutical, biotech or food applications requiring Tri-Clamp® type fittings with zero deadleg and highly polished stainless steel surfaces.

ASHCROFT®

Quick Guide
Commercial Gauges

TYPE 1005P/1005/1005S

ACCURACY
ASME B 40.100 Grade B (±3-2-3% of span)

DIAL SIZE
1½˝, 2˝, 2½˝, 3½˝ (4½˝ available with steel case/ring and plastic window, Type 1000)

CASE MATERIAL
1005P – ABS, black
1005 – Black painted steel
1005S – Stainless steel (1½˝ & 2˝ only)
Optional, color other than black, vent hole, panel mount sleeve for 1005P back connect

WETTED MATERIAL
Bronze/brass. *Optional sockets, nickel plated, Teflon taped, top or side connections, throttle plugs*

SENSING ELEMENT
Bourdon tube; Ashcroft patented Power*Flex*™ movement

CONNECTION
⅛ and ¼ NPT back and lower (1½˝ 1005S available in ⅛ NPT back only; 1½˝ 1005/1005P available in ⅛ NPT lower and back; 4½˝ Type 1000 available in ¼ NPT only)

RANGES
Vac.-6000 psi and compound*

*All ranges listed may not be available in all sizes/ connections. Please consult individual spec sheets.

Refer to page no. 129-131

Applications include compressors, filter regulators, medical equipment, automotive diagnostic, beverage dispensing, industrial machinery and a variety of other applications.

TYPE 1001T PANEL GAUGE

ACCURACY
ASME B 40.100 Grade B (±3-2-3% of span)

DIAL SIZE
1½˝, 2˝, 2½˝, 3½˝

CASE MATERIAL
Black painted steel

WETTED MATERIAL
Bronze/brass.

SENSING ELEMENT
Bourdon tube; Ashcroft patented Power*Flex*™ movement

CONNECTION
⅛ NPT back, ¼ NPT back (1½˝ not available in ¼ NPT)

RANGES
Vac.-6000 psi and compound*

Note: For panel mount refrigeration gauge (recovery, recycling) specify 1001T, XRR gauge

*All ranges may not be available in all ranges/connections. Please consult individual spec sheets.

Refer to page no. 132

Applications include instrument panels, air-conditioning equipment, air and gas compressors, machine tools and a variety of other applications.

TYPE 1008A/AL GENERAL SERVICE GAUGE

ACCURACY
ASME B 40.100 Grade B (±3-2-3% of span)

DIAL SIZE
63mm (2½˝), 100mm (4˝)

CASE & RING MATERIAL
304 stainless steel, dry, liquid filled or field fillable

WETTED MATERIAL
Bronze/brass

SENSING ELEMENT
Bourdon tube; Ashcroft patented Power*Flex*™ movement

CONNECTION
¼ NPT lower and back
Optional, metric and SAE connection

RANGES
Vac.-15,000 psi and compound

Refer to page no. 135

Applications include hydraulic systems, machine tools, pressure washers/sprayers and a variety of other applications.

TYPE 1005M, XRG AGRICULTURAL AMMONIA

ACCURACY
ASME B 40.100 Grade B (±3-2-3% of span)

DIAL SIZE
2½˝

CASE MATERIAL
Black painted steel

WETTED MATERIAL
316 stainless steel/steel

SENSING ELEMENT
Bourdon tube; Ashcroft patented Power*Flex*™ movement

CONNECTION
¼ NPT lower
Optional, 0.020"orifice stainless steel throttle plug

RANGES
0/60 psi, 0/150 psi, 0/400 psi

Refer to page no. 134

This product was designed to withstand rugged agricultural applications. Features include stainless tube and socket, in addition to glass window, necessary for anhydrous ammonia applications.

ASHCROFT®

Quick Guide
Commercial Gauges

TYPE 1005P, XUL
SPRINKLER SERVICE GAUGE

ACCURACY
ASME B 40.100 Grade B (±3-2-3% of span)

DIAL SIZE
3½″

CASE MATERIAL
ABS/polycarbonate blend

WETTED MATERIAL
Bronze/brass

SENSING ELEMENT
Bourdon tube; Ashcroft patented Power*Flex*™ movement

CONNECTION
¼ NPT lower

RANGES
0-300 psi (water), 0-80 psi retard to 250 psi (air), 0-600 psi
Optional, dual and triple scale metric dials

Refer to page no. 133

These gauges are UL-393 listed, UL of Canada listed and FM approved for fire protection sprinkler service for either water or air systems.

TYPE 1007P, XOR
REFRIGERATION MANIFOLD

ACCURACY
±1% at zero, ±2% three fourths of scale, ±5% last fourth of scale

DIAL SIZE
2½″

CASE MATERIAL
ABS, red (high pressure)
ABS, blue (low pressure)
Optional, black, ABS

WETTED MATERIAL
Bronze/brass

SENSING ELEMENT
Bourdon tube; Ashcroft patented Power*Flex*™ movement with FlutterGuard™

CONNECTION
⅛ NPT lower

RANGES
Vac/0/120 psi retard to 250 psi, 0/500 psi
Vac/0/500 psi retard to 800 psi, 0/800 psi
Optional, alternate refrigerant ranges

Note: for panel mount refrigeration gauges (recovery, recycling) see Type 1001T gauge. Specify 1001T, XRR gauge

Refer to page no. 137

Typical applications include checking or servicing refrigerant levels in automotive, residential or industrial air-conditioning units; refrigerant recovery and reclamation units; refrigerant transport systems and large scale air-conditioning and chilling equipment.

TYPE 2071
CONTRACTOR GAUGE

ACCURACY
ASME B 40.100 Grade A (±2-1-2% of span)

DIAL SIZE
4½″

CASE & RING MATERIAL
Aluminum with back-flange case, painted black; chrome plated ring

WETTED MATERIAL Bronze/brass soldered, siphon required for steam service

SENSING ELEMENT
Bourdon tube; Ashcroft patented Power*Flex*™ movement

CONNECTION
¼ NPT lower
Optional, throttle plugs

RANGES
Vac-600 psi and compound

Refer to page no. 136

These gauges are designed to meet the needs of heating, ventilating, plumbing and air-conditioning contractors.

TYPE 23DDG MINIGAUGE®
PRESSURE GAUGE

ACCURACY
±5% of span

DIAL SIZE
23mm (0.906″)

CASE MATERIAL
ABS blend, black

WETTED MATERIAL
Beryllium copper tube/brass socket

SENSING ELEMENT
Spiral wound Bourdon tube

CONNECTION
⅛ NPT back with 15mm (⁹⁄₁₆″) wrench flats.
Optional, throttle plugs, PT⅛″(JIS) and R ⅛″ (BSPT) threads

RANGES
60 psi-100 psi (180° dial arc)
160 psi-300 psi (235° dial arc)

Consult factory for high cycle life applications

Refer to page no. 138

These gauges are perfect for a multitude of applications where a 1½″ conventional size gauge is too large, such as mini-FRL's, pneumatic stack valves, air compressors and accessories.

TYPE 12DDG/15DDG DIRECT DRIVE GAUGE

ACCURACY
Standard: ±2% at setpoint
(setpoint is normally 50% of range)
UL listed: ±3.5% of span of middle three-fifths of scale

DIAL SIZE
1¼˝,1½˝

CASE MATERIAL
Stainless steel, sealed

WETTED MATERIAL
Beryllium copper tube/brass socket

SENSING ELEMENT
Spiral wound Bourdon tube
Optional, silicone dampened tube, silicone-filled tube

CONNECTION
⅛ NPT back, safety plug in 1500 psi-4000 psi ranges. *Optional, ¼ NPT back, throttle plugs*

RANGES
0/60 psi (180° arc)
0/100 psi, 0/160 psi, 0/200 psi, 0/300 psi, (235° arc)
0/700 psi (200° arc)
0/1,200 psi (180° arc)
0/1,500 psi 0/2,000 psi, 0/3,000 psi, 0/4,000 psi (165° arc)

Consult factory for high cycle life applications

Refer to page no. 139

Applications include pumps, air compressors, portable tire inflators, portable oxygen equipment, self-contained breathing apparatus, portable industrial gas cylinders and a variety of other applications.

ASHCROFT®

THREADED

Specification Matrix

Ashcroft Diaphragm Seals & Pressure Instrument Isolators

F = Female
M = Male

● = AVAILABLE

Process Connection Type			Threaded	Threaded w/Flushing Connection	Threaded or Threaded w/Flushing Connection	Threaded or Threaded w/Flushing Connection	Low Pressure Threaded or Threaded w/Flushing Conn.*
Model No.	Code		100/200/300[1]	101/201/301[1]	400/401[1]	500/501[1]	740/741[1]
Process Connection Size	Female	Male					
¼	25	02	F/M	F/M	F/M	F/M	F
½	50	04	F/M	F/M	F/M	F/M	F
¾	75	06	F/M	F/M	F/M	F/M	F
1	10	08	F/M	F/M	F/M	F/M	F
1½	15						
2	20						
3	30						
4	40						
6	60						
8	80						
Diaphragm Materials							
316L stainless steel	S		100 & 200	101 & 201	•	•	•
304L stainless steel	C		100 & 200	101 & 201			
Monel 400	P		100 & 200	101 & 201	•	•	•
Nickel	N		100 & 200	101 & 201			
Carpenter 20	D		100 & 200	101 & 201			
Tantalum	U		100 & 200	101 & 201	•	•	•
Hastelloy B	G		100 & 200	101 & 201	•	•	•
Hastelloy C 22	J		100 & 200	101 & 201	•	•	•
Hastelloy C 276	H		100 & 200	101 & 201	•	•	•
Teflon	T		200 & 300	201 & 301			
Viton	Y		200 & 300	201 & 301			
Kalrez	K		200 & 300	201 & 301			
Titanium	TI		200	201	•	•	•
Halar Coated Monel	R		100	101			
Bottom Housing Materials							
Steel	B		•	•			•
304L stainless steel	C		•	•			
316L stainless steel	S		•	•	•	•	•
Hastelloy B	G		•	•	•	•	•
Hastelloy C 22	J		•	•	•	•	•
Hastelloy C 276	H		•	•	•	•	•
Carpenter 20	D		•	•			•
Monel 400	M		•	•	•	•	•
Inconel 600	W		•	•			
Nickel	N		•	•			
PVC	V		Only ¼ or ½ NPT				
Kynar	KY		Only ¼ or ½ NPT				
Titanium	TI		•	•	•	•	•
Pressure Ratings [1]							
500 psi			Viton or Kalrez diaph.	Viton or Kalrez diaph.		•	
2500 psi			Metal & Teflon® diaph.	Metal & Teflon® diaph.			750 psi
4400 psi					•		
5000 psi	HP		100 & 200 metal diaph.	101 & 201 metal diaph.	401		
9000 psi	HP				400		
Instrument Connection Size							
¼	02T		•	•	•	•	
½	04T		•	•	•	•	•
Filling Fluid							
Glycerin	CG		•	•	•	•	•[4]
Silicone (direct to 10´ capillary)	CK		•	•	•	•	•
Silicone (over 10´ capillary)	DJ		•	•	•	•	•
Halocarbon	CF		•	•	•	•	•
Syltherm	HA		•	•	•	•	•
Food Grade Silicone	CZ		•	•	•	•	•
Distilled Water	FJ		•	•	•	•	•
Ethylene Glycol & Water	CT		•	•	•	•	•
Propylene Glycol	CV		•	•	•	•	•

[1] See Table A on pages 170-171 for instrument compatibility. Minimum pressure is determined by the instrument that will be attached to the diaphram seal.

[4] Glycerin not recommended for vacuum, compound or inches of water.

ASHCROFT®

Quick Guide
Diaphragm Seals

THREADED

Specification Matrix

Ashcroft Diaphragm Seals & Pressure Instrument Isolators

F = Female
M = Male

● = AVAILABLE

Process Connection Type			Diaphragm Seal	Diaphragm Seal	Diaphragm Seal (w/Flushing Connection)	Diaphragm Seal (w/Flushing Connection)	Female & Male Threaded
Model No.	**Code.**		**510[1]**	**510HP[1]**	**511**	**511HP**	**311**
Process Connection Size	**Female**	**Male**					
¼	25	02					F/M
½	50	04	M	M	M	M	F/M
¾	75	06					F/M
1	10	08					F/M
1½	15						
2	20						
3	30						
4	40						
6	60						
8	80						
Diaphragm Materials							
316L stainless steel	S		•	•	•	•	•
304L stainless steel	C						
Monel 400	P		•	•	•	•	
Nickel	N						
Carpenter 20	D						
Tantalum	U						•
Hastelloy B	G						
Hastelloy C 22	J						
Hastelloy C 276	H		•	•	•	•	•
Teflon	T						
Viton	Y						
Kalrez	K						
Titanium	TI						
Halar Coated Monel	R						
Bottom Housing Materials							
Steel	B						
304L stainless steel	C						
316L stainless steel	S		•	•	•	•	•
Hastelloy B	G						
Hastelloy C 22	J						
Hastelloy C 276	H		•	•	•	•	•
Carpenter 20	D						
Monel 400	M		•	•	•	•	
Inconel 600	W						
Nickel	N						
PVC	V						
Kynar	KY						
Titanium	TI						
Pressure Ratings [1]							
500 psi							
1000 psi							•
1500 psi			•		•		
2500 psi							
5000 psi	HP			•		•	
9000 psi	HP						
Instrument Connection Size							
¼	02T						•
½	04T		•	•	•	•	•
Filling Fluid							
Glycerin	CG		•	•	•	•	•
Silicone (direct to 10´ capillary)	CK		•	•	•	•	•
Silicone (over 10´ capillary)	DJ		•	•	•	•	•
Halocarbon	CF		•	•	•	•	•
Syltherm	HA		•	•	•	•	•
Food Grade Silicone	CZ		•	•	•	•	•
Distilled Water	FJ		•	•	•	•	•
Ethylene Glycol & Water	CT		•	•	•	•	•
Propylene Glycol	CV		•	•	•	•	•

[1] See Table A on pages 170-171 for instrument compatibility.
Minimum pressure is determined by the instrument that will be attached to the diaphram seal.
[2] Type 300 series not available with metallic diaphragms.
[3] Type 302/303 not available with 1″ process size.

ASHCROFT®

Quick Guide
Diaphragm Seals

THREADED

Specification Matrix

Ashcroft Diaphragm Seals & Pressure Instrument Isolators

F = Female
M = Male
● = AVAILABLE

Process Connection Type			Female Threaded (w/Flushing Connection)	Male/Female Threaded Mini (w/Flushing Connection)	1″ Male Flush Mini	Quick Connect	In-line Threaded
Model No.	Code		312	310/315*	330	320/321	104/204
Process Connection Size	Female	Male					
¼	25	02	F	F/M			F
½	50	04	F	F/M			F
¾	75	06		M			
1	10	08		M	M		
1½	15					•	
2	20					•	
3	30						
4	40						
6	60						
8	80						
Diaphragm Materials							
316L stainless steel	S		•	•	•	•	•
304L stainless steel	C						•
Monel 400	P			•			•
Nickel	N						•
Carpenter 20	D						•
Tantalum	U		•				•
Hastelloy B	G			•			•
Hastelloy C 22	J						•
Hastelloy C 276	H		•	•			•
Teflon	T						204
Viton	Y						204
Kalrez	K						204
Titanium	TI						•
Halar Coated Monel	R						104
Bottom Housing Materials							
Steel	B						•
304L stainless steel	C						•
316L stainless steel	S		•	•	•	•	•
Hastelloy B	G			•			•
Hastelloy C 22	J						•
Hastelloy C 276	H		•	•			•
Carpenter 20	D						•
Monel 400	M			•			•
Inconel 600	W						•
Nickel	N						•
PVC	V						
Kynar	KY						
Titanium	TI						•
Pressure Ratings [1]							
500 psi							Viton or Kalrez diaph.
1000 psi			•			•	
2500 psi				•			Metal & Teflon® diaph.
3000 psi					•		
5000 psi	HP						
9000 psi	HP						
Instrument Connection Size							
¼	02T		•	•	•	•	•
½	04T		•	•	•	2″ only	•
Filling Fluid							
Glycerin	CG		•	•	•	•	•
Silicone (direct to 10′ capillary)	CK		•	•	•	•	•
Silicone (over 10′ capillary)	DJ		•	•	•	•	•
Halocarbon	CF		•	•	•	•	•
Syltherm	HA		•	•	•	•	•
Food Grade Silicone	CZ		•	•	•	•	•
Distilled Water	FJ		•	•	•	•	•
Ethylene Glycol & Water	CT		•	•	•	•	•
Propylene Glycol	CV		•	•	•	•	•

[1] See Table A on pages 170-171 for instrument compatibility.
Minimum pressure is determined by the instrument that will be attached to the diaphram seal.
[2] Type 300 series not available with metallic diaphragms.
[3] Type 302/303 not available with 1″ process size.

ASHCROFT®

FLANGED

Specification Matrix

Ashcroft Diaphragm Seals & Pressure Instrument Isolators

F = Female
M = Male

● = AVAILABLE

Process Connection Type		Raised Face Flange	Raised Face Flange w/Flushing Connection	In-Line Flanged	Raised Face Flange *w/Flushing Connection	Low Pressure Flanged *w/Flushing Connection
Model No.	Code	102/202/302[1,2]	103/203/303[1,2]	106/206	402/403*	702/703*
Process Connection Size						
¼	25					
½	50	•	•	•	•	•
¾	75	•	•	•	•	•
1	10	•	•	•	•	•
1½	15	•	•	•	•	•
2	20	•	•	•	•	•
3	30	•	•	•	•	•
4	40			•		
6	60			•		
8	80			•		
Diaphragm Materials						
316L stainless steel	S	102 & 202	103 & 203	•	•	•
304L stainless steel	C	102 & 202	103 & 203	•		
Monel 400	P	102 & 202	103 & 203	•	•	•
Nickel	N	102 & 202	103 & 203	•		
Carpenter 20	D	102 & 202	103 & 203	•		
Tantalum	U	102 & 202	103 & 203	•	•	•
Hastelloy B	G	102 & 202	103 & 203	•	•	•
Hastelloy C 22	J	102 & 202	103 & 203	•	•	
Hastelloy C 276	H	102 & 202	103 & 203	•	•	•
Teflon	T	202 & 302	203 & 303	206		
Viton	Y	202 & 302	203 & 303	206		
Kalrez	K	202 & 302	203 & 303	206		
Titanium	TI	202	203	206	•	•
Halar Coated Monel	R	102	103	106		
Bottom Housing Materials						
Steel	B	•	•	•		
304L stainless steel	C	•	•	•		
316L stainless steel	S	•	•	•	•	•
Hastelloy B	G	•	•	•	•	•
Hastelloy C 22	J	•	•	•	•	•
Hastelloy C 276	H	•	•	•	•	•
Carpenter 20	D	•	•	•		•
Monel 400	M	•	•	•	•	•
Inconel 600	W	•	•			
Nickel	N	•	•			
PVC	V	1, 1½, 2				
Kynar	KY	1, 1½, 2				
Titanium	TI	•	•		•	•
Pressure Ratings [1]						
500 psi						
2500 psi						
Flange Class						
150, 300, 600, 900 or 1500		•	•	150	•	150, 300, 600
Instrument Connection Size						
¼	02T	•	•	•	•	•
½	04T	•	•	•	•	•
Filling Fluid						
Glycerin	CG	•	•	•	•	•
Silicone (direct to 10´ capillary)	CK	•	•	•	•	•
Silicone (over 10´ capillary)	DJ	•	•	•	•	•
Halocarbon	CF	•	•	•	•	•
Syltherm	HA	•	•	•	•	•
Food Grade Silicone	CZ	•	•	•	•	•
Distilled Water	FJ	•	•	•	•	•
Ethylene Glycol & Water	CT	•	•	•	•	•
Propylene Glycol	CV	•	•	•	•	•

[1] See Table A on pages 170-171 for instrument compatibility.
Minimum pressure is determined by the instrument that will be attached to the diaphram seal.
[2] Type 300 series not available with metallic diaphragms.
[3] Type 302/303 not available with 1˝ process size.

ASHCROFT®

Quick Guide
Diaphragm Seals

IN-LINE

Specification Matrix

Ashcroft Diaphragm Seals & Pressure Instrument Isolators

F = Female
M = Male

● = AVAILABLE

		Saddle	In-line Socket Weld	In-line Butt Weld	Iso-Ring	Iso-Spool
		105/205	107/207	108/208	80/81	85/86
Process Connection Size					**Pipe Size (inches)**	**Pipe Size (inches)**
¼	25		•	•	2.0 **Type 80 only**	1.0
½	50		•	•	3.0 12.0	1.5
¾	75		•	•	4.0 14.0	**Type 86 only**
1	10		•	•	5.0 16.0	
1½	15		•	•	6.0 18.0	2.0
2	20		•	•	8.0 20.0	
3	30	3″			10.0	
4	40	4″ and larger				
6	60					
8	80					
Diaphragm Materials					**Inner Flexible Wall**	**Inner Flexible Wall**
316L stainless steel	S	•	•	•	Buna N (E)	Buna N (E)
304L stainless steel	C	•	•	•	Teflon (T)	Teflon (T)
Monel 400	P	•	•	•	Viton (Y)	Viton (Y)
Nickel	N	•	•	•	Natural Rubber (NP)	Natural Rubber (NP)
Carpenter 20	D	•	•	•	Silicone (S)	Silicone (S)
Tantalum	U	•	•	•		
Hastelloy B	G	•	•	•		
Hastelloy C 22	J	•	•	•		
Hastelloy C 276	H	•	•	•		
Teflon	T	205	207	208		
Viton	Y	205	207	208		
Kalrez	K	205	207	208		
Titanium	TI	205	207	208		
Halar Coated Monel	R	105	107	108		
Bottom Housing Materials					**Ass'y. Flanges / Code**	**Ass'y. Flanges / Code**
Steel	B	•	•	•	Carbon Steel (B)	Carbon Steel (B)
304L stainless steel	C	•	•	•	316 SS (S)	316 SS (S)
316L stainless steel	S	•	•	•	CPVC (CP)	CPVC (CP)
Hastelloy B	G	•	•	•	Teflon Enveloped (CT)	Teflon Enveloped (CT)
Hastelloy C 22	J	•	•	•	Polypropylene (P)	Polypropylene (P)
Hastelloy C 276	H	•	•	•		
Carpenter 20	D	•	•	•		
Monel 400	M	•	•	•		
Inconel 600	W	•	•	•		
Nickel	N	•	•	•		
PVC	V					
Kynar	KY					
Titanium	TI					
Pressure Ratings [1]						**Pressure Rating Type 85**
500 psi		Viton or Kalrez diaph. only	Viton or Kalrez diaph. only	Viton or Kalrez diaph. only		2000 psi
2500 psi		Metal & Teflon® diaph.	Metal & Teflon® diaph.	Metal & Teflon® diaph.		
Flange Class						
150, 300, 600, 900 or 1500					150 or 300	150 or 300
Instrument Connection Size						
¼	02T	•	•	•	1/4 NPT (02T)	1/4 NPT (02T)
½	04T	•	•	•	1/2 NPT (04T)	1/2 NPT (04T)
Filling Fluid						
Glycerin	CG	•	•	•	•	•
Silicone (direct to 10′ capillary)	CK	•	•	•	•	•
Silicone (over 10′ capillary)	DJ	•	•	•	•	•
Halocarbon	CF	•	•	•	•	•
Syltherm	HA	•	•	•	•	•
Food Grade Silicone	CZ	•	•	•	•	•
Distilled Water	FJ	•	•	•	•	•
Ethylene Glycol & Water	CT	•	•	•	•	•
Propylene Glycol	CV	•	•	•	•	•

[1] See Table A on pages 170-171 for instrument compatibility.
Minimum pressure is determined by the instrument that will be attached to the diaphram seal.
[2] Type 300 series not available with metallic diaphragms.
[3] Type 302/303 not available with 1″ process size.

ASHCROFT®

Quick Guide Transducers & Transmitters

MODEL GC31 ULTRA-COMPACT DIGITAL PRESSURE SENSOR

ACCURACY: ±1.0% Span

ANALOG OUTPUT: (1-5Vdc)

DISPLAY TYPE: 3½ digit, 10mm LED

STANDARD RANGES (Gauge):
50 to 1500 psig

STANDARD RANGES (Compound):
–15 to 15 psig thru –15 to 300 psig

Proof Pressure:
2X range: 500 psi & below
1.5X range: 1000 psi & above

Burst Pressure:
10X range

SWITCH CONTACTS:
(2) NPN or PNP open collector outputs

MEDIA: Fluids and gases compatible with 304SS (sensor housing) and 17-4 pH SS (sensor diaphragm)

ENVIRONMENTAL RATING: IP40

AGENCY APPROVALS: CE

CE LOOK FOR THIS MARK ON OUR PRODUCT

Refer to page no. 181

This ultra-compact pressure sensor is used on a wide variety of applications where consistent, reliable pressure measurement is essential. The GC31 features an integral display, user scalable analog ouput and two independent switches. Ideal for monitoring and control of pneumatic and hydraulic systems where high cycle life and functionality is required.

MODEL GC35 ULTRA-COMPACT DIGITAL PRESSURE SENSOR

ACCURACY: ±1.0% Span

ANALOG OUTPUT: (4-20mA)

DISPLAY TYPE: 4 digit, 8mm LED

STANDARD RANGES (Gauge):
50 to 7500 psig

STANDARD RANGES (Compound):
–15 to 75 psig thru –15 to 300 psig

Proof Pressure:
Ranges 1500 psig & below: 4X range
Ranges 3000 psig & above: 2.5X range

Burst Pressure:
Ranges 1500 psi & below: 10X range
Ranges 3000 psi & below: 5X range
Ranges 5000 psi & above: 3X range

SWITCH CONTACTS:
(2) NPN or PNP open collector outputs

MEDIA: Fluids and gases compatible with 304SS (sensor housing) and 17-4 pH SS (sensor diaphragm)

ENVIRONMENTAL RATING: IP40

AGENCY APPROVALS: CE

CE LOOK FOR THIS MARK ON OUR PRODUCT

Refer to page no. 182

Ultra-compact digital pressure sensor, ideal for monitoring pressures within hydraulic presses/stamping equipment and lifts, water/wastewater pressure control and cooling / lubrication systems. This versatile sensor offers a highly visible LED display for local indication. Product features allow the user to configure the analog scaling to any range within the full scale of the sensor range while integrated switches offer actuation and deadband to any points within the full scale range.

TYPE GC51 RANGEABLE PRESSURE TRANSMITTER

ACCURACY: ±0.25% Span (URL)0

ANALOG OUTPUT: 4-20mA (2-wire)

DISPLAY TYPE: 4 digit, 10mm LCD with LED backlight

STANDARD RANGES (Compound):
–15 to 15psi thru –15 to 50psi

STANDARD RANGES (Gauge):
50 to 7500 psig

Overpressure (Span):	Proof	Burst
1500psi and below	200%	500%
3000, 5000psi	150%	300%
7500psi	120%	150%

ENVIRONMENTAL RATING:
IP65 / NEMA 4X

MEDIA: Fluids and gases compatible with 316SS and pH17-4 stainless steel

AGENCY APPROVALS: CE

CE LOOK FOR THIS MARK ON OUR PRODUCT

Refer to page no. 183

Compact pressure transmitter used to monitor wet/dry media pressures within process automation, hydraulic systems, compressors, pumps and tank level applications.

TYPE GC55 WET/WET DIFFERENTIAL PRESSURE TRANSDUCER

ACCURACY: ± 0.5% Span

ANALOG OUTPUT: (4-20mA or 1-5Vdc)

DISPLAY TYPE: 3½ digits

STANDARD RANGES (Differential):
75 to 300 psid

Pressure Range

	Proof	Burst
All	2X Span (URL)	10X Span (URL)

Static (Line) Pressure Effects: None

Single Side (Differential Limits):

Pressure Range

	Proof	Burst
All	2X Span (URL)	10X Span (URL)

MEDIA: Fluids and gases compatible with 304SS (sensor housing) and 17-4 pH SS (sensor diaphragm)

ENVIRONMENTAL RATING: IP66

Refer to page no. 184

Compact high-differential pressure transducer for filter monitoring on HVAC hydronic cooling/heating systems and pump controls. Model contains two polysilicon thin film sensors with welded Stainless Steel wetted components to accommodate wet or dry pressure media. The product features a bright LED front panel display for local indication and button to allow the user to select between the dP value and line pressure readings from either sensor.

ASHCROFT®

Quick Guide Transducers & Transmitters

A2 HEAVY INDUSTRIAL AND EXPLOSION PROOF TRANSMITTERS

ACCURACY: ±0.25, ±0.5, ±1.0% Span

OUTPUT: 4-20mA, 0-5Vdc, 0-10Vdc, 1-5Vdc, 1-6Vdc, 0.5-4.5Vdc (ratiometric)

STANDARD RANGES:
15 to 7500 psi absolute, 1.5 to 10,000 psig, compound to 100 psig
Overpressure: (Varies w/pressure range)
Proof: up to 2 x Span
Burst: up to 4 x Span

ENVIRONMENTAL RATING:
IP65, IP67*, NEMA 4X, 6, 7, 9

AGENCY APPROVALS: CE

*varies with pressure range

LOOK FOR THIS MARK ON OUR PRODUCT

Refer to page no. 187

A highly configurable transmitter designed for hazardous location and heavy industrial applications. High performance accuracy and thermal capability over –20/85°C (–4/185°F) with additional option of zero and span pots. 316L SS wetted materials are standard.

A2X EXPLOSION/FLAME PROOF PRESSURE TRANSMITTER

ACCURACY: ±0.25, ±0.5, ±1.0% Span

OUTPUT: 4-20mA, 0-5Vdc, 0-10Vdc, 1-5Vdc, 1-6Vdc, 0.5-4.5Vdc (ratiometric)

STANDARD RANGES:
15 to 7500 psi absolute, 1.5 to 10,000 psig, compound to 100 psig
Overpressure: (Varies w/pressure range)
Proof: up to 2 x Span
Burst: up to 4 x Span

ENVIRONMENTAL RATING:
Ingress Protection Rating: IP65; NEMA 7,9

AGENCY APPROVALS:
Explosion Proof – cUL (USL/CNL):
Flame Proof – ATEX:
Intrinsically Safe – FM (4-20mA)
– CE

LOOK FOR THESE MARKS ON OUR PRODUCTS

Refer to page no. 188

The Ashcroft® A2X is ideal for a broad spectrum of pressure sensing applications where explosion/flameproof hazardous location ratings are required. The A2X pressure transmitter offers all 316L SS wetted materials and features excellent accuracy and stability for reliable measurements over the life of the instrument.

A4 INTRINSICALLY SAFE & NON-INCENDIVE PRESSURE TRANSMITTER

ACCURACY: ±.25, ±0.5, ±1.0% Span

OUTPUT: 4-20mA

STANDARD RANGES:
15 to 7500 psi absolute, 1.5 to 10,000 psig, compound to 100 psig
Overpressure: (Varies w/pressure range)
Proof: up to 2 x Span
Burst: up to 4 x Span

ENVIRONMENTAL RATING:
Basic IP65, NEMA 4X
All Welded* IP67, NEMA 6 (varies with pressure range)
*(w/o Z/S)

AGENCY APPROVALS: CE
Non-Incendive – FM/CSA:

LOOK FOR THESE MARKS ON OUR PRODUCTS

Refer to page no. 189

The Ashcroft® A4 pressure transmitter is ideal for a broad spectrum of pressure sensing requirements where Intrinsically Safe or Non-Incendive hazardous location ratings are required. Designed / manufactured to provide the user with accurate, reliable, and stable output data using an on-board microprocessor programmed during a unique digital compensation process; providing a product that supplies extremely linear and precise performance. 316L SS wetted materials are standard.

H2 PRECISION PRESSURE TRANSDUCER

ACCURACY: ±0.15, ±0.20% Span

OUTPUT: 4-20mA, 0-5Vdc, 0-10Vdc

STANDARD RANGES:
Gauge: 15 psig to 25,000 psig,
Vac/15 psig to Vac/300 psig,
Absolute: 15 psia to 150 psia

ENVIRONMENTAL RATING:
IP65: ≦300 psi
IP67: Ranges >300 psi

AGENCY APPROVALS:
CE Compliance: EN61326-1 2006,
EN61326-2-3 2006
EU RoHS Compliance

LOOK FOR THIS MARK ON OUR PRODUCT

Refer to page no. 190

The Ashcroft® H2 precision pressure transducer is ideal for measuring and controlling challenging hydraulic and pneumatic operations. The high accuracy and performance, combined with rugged construction, provides a highly reliable and safe sensor platform.

ASHCROFT®

Quick Guide Transducers & Transmitters

T2 HIGH PERFORMANCE PRESSURE TRANSDUCER

ACCURACY: ±0.25% of Span

OUTPUT: 4-20mA, 0-5Vdc, 0-10Vdc, 1-5Vdc, 1-6Vdc, 0.5-4.5Vdc (ratiometric)

STANDARD RANGES:
Pressure Ranges (Span): 30 to 20,000 psig, compound to 300 psig
Overpressure: (Varies w/pressure range)
Proof: up to 3 x Span
Burst: up to 10 x Span

ENVIRONMENTAL RATING:
NEMA 4X, IP65

AGENCY APPROVALS: CE

CE LOOK FOR THIS MARK ON OUR PRODUCT

Refer to page no. 185

A robust pressure transducer designed for industrial applications featuring Ashcroft's proven polysilicon thin film pressure sensing element. Product features include voltage and current outputs, a variety of pressure ports and electrical terminations to international standards with excellent accuracy and performance over –40 to 125°C, (–40 to 257°F).

TYPE G2 OEM PRESSURE TRANSDUCER

ACCURACY:
±1% Span: through –20/85°C (–4/185°F)
±1.5% Span: through –40/–20°C and (–40/–4°F) and 85/125°C (185/257°F).

OUTPUT: 4-20mA, 0-5Vdc, 0-10Vdc, 1-5Vdc, 1-6Vdc, 0.5-4.5Vdc (ratiometric)

ENVIRONMENTAL RATING:
NEMA 4X, IP65 and IP67

STANDARD RANGES:
Pressure Ranges (Span): 30 to 20,000 psig, compound to 300 psig
Overpressure: (Varies w/pressure range)
Proof: up to 3 x Span
Burst: up to 10 x Span

AGENCY APPROVALS: CE

CE LOOK FOR THIS MARK ON OUR PRODUCT

Refer to page no. 186

A robust pressure transducer designed for OEM applications featuring Ashcroft's proven polysilicon thin film pressure sensing element. Product features include voltage and current outputs, a variety of pressure ports and electrical terminations to international standards with excellent accuracy and performance over –40 to 125°C, (–40 to 257°F).

KM15 HIGH VOLUME OEM PRESSURE TRANSDUCER

ACCURACY:
±0.5% Span, 100 psig and above
±1.0% Span, 75 psig and below

OUTPUT: 1-5Vdc, 1-6Vdc, 0.5-4.5Vdc (ratiometric)

ENVIRONMENTAL RATING: IP67

STANDARD RANGES:
Pressure Ranges (Span): 15 to 7500 psig/s, compound to 300 psig

Overpressure (Span):	Proof	Burst
≤ 3000 psig	2 x Span	5 x Span
5000 psig	1.5 x Span	5 x Span
7500 tpsig	1.2 x Span	5 x Span

AGENCY APPROVALS: CE

CE LOOK FOR THIS MARK ON OUR PRODUCT

Refer to page no. 191

An economical transducer designed for the high volume OEM. Product features include voltage outputs, a variety of pressure ports and electrical terminations to international standards with excellent accuracy and performance over –30 to 120°C (–25 to 250°F). IP67 ingress rating and 100V/m EMC immunity.

K1/K2 SERIES INDUSTRIAL TRANSDUCER

ACCURACY: ±0.5%, ±1.0% Span

OUTPUT:
K1: 4-20mA, 1,5Vdc, 1-6Vdc, 1-11Vdc
K2: 2, 3, 10, 20 mV/V

ENVIRONMENTAL RATING:
NEMA 1, NEMA 4X

STANDARD RANGES:
Pressure Ranges (Span): 15 to 20,000 psig, compound to 60 psig

Overpressure (Span):	Proof	Burst
≤ 2000 psig	2 x Span	8 x Span
3000 to 5000 psig	1.5 x Span	3 x Span
7500 to 20,000 psig	1.2 x Span	1.5 x Span

AGENCY APPROVALS:
Intrinsically Safe – FM (consult factory)

FM LOOK FOR THIS MARK ON OUR PRODUCT

Refer to page no. 192/193

A versatile and proven industrial transducer with an extensive installed base. Wide range of pressure fittings and electrical terminations along with FM hazardous area approvals.

ASHCROFT®

Quick Guide Transducers & Transmitters

K8 SERIES TRANSDUCER w/mV SIGNAL

ACCURACY: ±0.5%, ±1.0% Span

OUTPUT: Varies from 6-18 mV/V at Span ratiometric

STANDARD RANGES:
Pressure Ranges (Span): 45 to 20,000 psig

Overpressure (Span):	Proof	Burst
≤ 2000 psig	2 x Span	2 x Span
3000 to 5000 psig	1.5 x Span	3 x Span
7500 to 20,000 psig	1.2 x Span	1.5 x Span

ENVIRONMENTAL RATING: NEMA 4X

Refer to page no. 194

A pressure transducer for applications that can incorporate an unconditioned mV/V output and require the proven benefits of the polysilicon thin film pressure sensing element. A broad range of pressure fittings allow the user design flexibility in packaging.

KX/KS SERIES SANITARY TRANSDUCERS

ACCURACY: ±1.0% Span

OUTPUT:
KS: 4-20mA, 1-5Vdc, 1-6Vdc; 2, 3, 10, 20 mV/V ratiometric
KX: 4-20mA, 1-5Vdc, 1-6Vdc

STANDARD RANGES:
Pressure Ranges (Span):
KS: 30 to 1000 psig, compound to 100 psig
Kx: 100 to 5000 psig

Overpressure (Span):	Proof	Burst
≤ 2000 psig	2 x Span	8 x Span
3000 to 5000 psig	1.5 x Span	3 x Span

ENVIRONMENTAL RATING: NEMA 4X

Refer to page no. 195/196

For use in sanitary, waste-water, food processing and pharmaceutical applications. The KS Series features a 316L stainless steel electropolished Tri-Clamp style diaphragm while the KX Series features several options designed for harsh applications – flush mounted diaphagm, PMC adapter or weldnuts. The polysilicon thin film pressure sensing element offers proven performance and stability.

MODEL GC30 ULTRA-COMPACT DIFFERENTIAL PRESSURE SENSOR

ACCURACY: ±1.5% Span

ANALOG OUTPUT: (1-5Vdc)

DISPLAY TYPE: 3½ digit, 10mm LED

STANDARD RANGES (Gauge):
0.25˝ I.W.C. to 25˝ I.W.C.

STANDARD RANGES (Compound):
±0.25˝ I.W.C. to ±25˝ I.W.C.

MEDIA: Clean, dry air/gases compatible with Aluminum, ABS, Ceramic, Silicon, and Silicone RTV

SWITCH CONTACTS:
(2) NPN or PNP open collector outputs

ENVIRONMENTAL RATING: IP40

AGENCY APPROVALS: CE

CE LOOK FOR THIS MARK ON OUR PRODUCT

Refer to page no. 197

Ultra-compact pressure sensor is exceptional when monitoring differential pressures in clean rooms, filters, fan speed control and vacuum/suction pressure sensing & control. Consistent, reliable pressure measurement is provided due to the highly reliable SiGlas™ Sensor. The GC30 offers an analog ouput with two independent, user configurable switches.

TYPE GC52 RANGEABLE WET/WET DIFFERENTIAL PRESSURE TRANSMITTER

ACCURACY: ±0.50% Span (URL)

OUPUT SIGNAL: 4-20mA (2 Wire)

DISPLAY TYPE: 4 digit, 10mm LCD with LED backlight

STANDARD RANGES (Bi-Directional, Inches W.C.):
±4 to ±200 i.w.c.

STANDARD RANGES (Uni-Directional, Inches W.C.):
0 to 4 thru 400 i.w.c.

STANDARD RANGES
Static (Line) Pressure:

Pressure Range	Proof	Burst
All	300 psi	800 psi

Static (Line) Pressure Effects:

Pressure Range	Effect
≥20˝W.C., ±8˝ W.C.	±0.3% Span/100psi
8˝W.C., ±4˝ W.C.	±0.7% Span/100psi
4˝W.C.	±1.5% Span/100psi

Single Side (Differential) Limits:

Pressure Range	Proof	Burst
≤8˝ W.C., ±4˝ W.C.	30 psid	130 psid
≥20˝ W.C., ±8˝ W.C.	100 psid	130 psid

MEDIA: Fluids and gases compatible with 316SS, Viton and Coramic

ENVIRONMENTAL RATING:
IP65 / NEMA 4X

AGENCY APPROVALS: CE

CE LOOK FOR THIS MARK ON OUR PRODUCT

Refer to page no. 198

Uniquely compact wet/wet differential pressure transmitter, ideal for flow and tank level applications where reliable, low dP measurements are required. This instrument can be adjusted to rearrange the transmitter and offers flow measurement/square root extraction where the flow rate can be displayed and analog signal can be output. Equipped with the patented SiGlas™ 316 Stainless Steel isolated sensor, it can monitor a wide variety of wet or dry media.

ASHCROFT®

Quick Guide Transducers & Transmitters

CXLdp SERIES DIN/PANEL/WALL MOUNT

ACCURACY: 0.8% or 0.4% Span

OUTPUT SIGNAL:
4-20mA, 0-5, 0-010Vdc (24Vac/Vdc)

PRESSURE RANGES (Inches W.C.)
Unidirectional: 0.10 to 0/25 I.W.C.
Bidirectional: ±0.10 to ±15 I.W.C.
Overpressure
Proof Pressure: 15 psi
Burst Pressure: 25 psi

ENVIRONMENTAL RATING: NEMA 1

MOUNTING: DIN rail or panel mount

MEDIA: Clean, dry and non-corrosive gas

ENVIRONMENTAL RATING: NEMA 1

AGENCY APPROVALS: CE

CE LOOK FOR THIS MARK ON OUR PRODUCT

Refer to page no. 199

Static or velocity pressure measurement for flow stations, ducts, building pressure, filter efficiency, van boxes or room pressurization.

DXLdp SERIES DIN MOUNT

ACCURACY: 0.25%, 0.50% or 1.00% Span

OUTPUT SIGNAL:
4-20mA, 1-5Vdc, 1-6Vdc, 0-5Vdc, 0-10Vdc

PRESSURE RANGES (Inches W.C.):
Unidirectional: 0.10 to 100 I.W.C.
Bidirectional: ±0.05 to ±100 I.W.C.
Overpressure
Proof Pressure: 15 psi
Burst Pressure: 25 psi
Max. static (line) pressure: 25 psi

MOUNTING: DIN rail mount:
EN50022
EN50035
EN50045

MEDIA
Clean, dry and non-corrosive gas
(consult factory for use on other media)

ENVIRONMENTAL RATING: NEMA 1

AGENCY APPROVALS: CE

CE LOOK FOR THIS MARK ON OUR PRODUCT

Refer to page no. 200

Designed for ease of installation and system calibration, the DXLdp is ideal for pharmaceutical plants and other installations where large numbers of air flow and dp measurements are being monitored.

RXLdp SERIES REDUCED SIZE

ACCURACY: 1.00% Span

OUTPUT SIGNAL:
4-20mA, 1-5Vdc, 1-6Vdc, 0-5Vdc, 0-10Vdc

PRESSURE RANGES (Inches W.C.):
Unidirectional: 0.10 to 50 I.W.C.
Bidirectional: ±0.05 to ±50 I.W.C.
Overpressure
Proof Pressure: 15 psi
Burst Pressure: 25 psi
Max. static (line) pressure: 25 psi

MEDIA
Clean, dry and non-corrosive gas
(consult factory for use on other media)

ENVIRONMENTAL RATING: NEMA 1

AGENCY APPROVALS: CE (optional)

CE LOOK FOR THIS MARK ON OUR PRODUCT

Refer to page no. 201

A compact transmitter for comfort control and other HVAC applications.

XLdp SERIES HIGH PERFORMANCEL

ACCURACY: 0.25% or 0.50% Span

OUTPUT SIGNAL:
4-20mA, 1-5Vdc, 1-6Vdc

PRESSURE RANGES (Inches W.C.):
Unidirectional: 0.10 to 100 I.W.C.
Bidirectional: ±0.05 to ±100 I.W.C.
Overpressure
Proof Pressure: 15 psi
Burst Pressure: 25 psi
Max. static (line) pressure: 25 psi

MEDIA
Clean, dry and non-corrosive gas
(consult factory for use on other media)

ENVIRONMENTAL RATING: NEMA 2

AGENCY APPROVALS: CE (optional)

CE LOOK FOR THIS MARK ON OUR PRODUCT

Refer to page no. 202

High performance dp transmitter with proven reliability and stability. Excellent for air handling applications including fume hood control and room pressurization.

ASHCROFT®

Quick Guide Transducers & Transmitters

IXLdp SERIES INDUSTRIAL

ACCURACY: 0.25% or 0.50% Span

OUTPUT SIGNAL:
4-20mA, 1-5Vdc, 1-6Vdc, ±5Vdc, ±2.5Vdc

PRESSURE RANGES (Inches W.C.):
Unidirectional: 0.10 to 200 I.W.C.
Bidirectional: ±0.05 to ±100 I.W.C.
Overpressure
Proof Pressure: 20 psi
Burst Pressure: 50 psi
Max. static (line) pressure: 100 psi

MEDIA
Clean, dry and non-corrosive gas (consult factory for use on other media)

NOT FOR USE ON LIQUIDS

ENVIRONMENTAL RATING: NEMA 4X

AGENCY APPROVALS: FM

FM LOOK FOR THIS MARK ON OUR PRODUCT

Refer to page no. 203

A rugged low pressure transmitter in cast 300 series stainless steel enclosure. A good choice for dp monitoring in pollution control, combustion control, and other applications where precision sensing is needed in a tough environment.

2279 DURATRAN PRESSURE TRANSMITTER

ACCURACY: ±0.50% of span

OUTPUT SIGNAL: 4-20mA

PRESSURE RANGES:
Vacuum and compound, 12 to 20,000 psi

DIAL SIZE: 4½″ analog

CASE MATERIAL: Phenolic

SENSING ELEMENT: Bourdon tube

WETTED MATERIAL: 316 SS, Monel

AGENCY APPROVALS: FM

FM LOOK FOR THIS MARK ON OUR PRODUCT

Refer to page no. 204

Product combines a reliable, local, analog pressure indication with 4-20mA transmitter. The wide selection of system materials and corrosion-proof housing meet a variety of demanding applications including those with vibration and pulsation.

TYPE DM61 DIGITAL PANEL METER

ACCURACY: 0.10% of span

DISPLAY: 6 Digit

POWER: 12 or 24 V Power Supply

INPUTS: Field Selectable: 0-20, 4-20mA, ±10 Vdc, 0-5 Vdc, 1-5 Vdc, 0-10 Vdc, Modbus PV (slave)

BUTTONS/DISPLAY & MIN/MAX VALUES:
User-Programmable and User-Defined

ENVIRONMENTAL:
Operating Temperature Range:
–40°C to 65°C (–40°F to 149°F)
Storage Temperature Range:
–40°C to 85°C (–40°F to 185°F)
Relative Humidity: 0-90% R.H. non-condensing

ENCLOSURE: 1/8 DIN, high impact plastic, UL 94V-0

CONNECTIONS:
Removable screw terminal blocks accept 12 to 22 AWG wire, RJ45 for external relays, digital I/O, and serial communication adapters

ALARM POINTS: 2 or 4 SPDT (Form C) internal and/or 4 SPST (Form A) external

ALARM DEADBAND: 0-100%, User-Selectable

OPTION:
Expansion Modules For Relays, Digital I/O and USB, RS-232 and RS-485 Communications Adapters

c UL us LISTED CE LOOK FOR THIS MARK ON OUR PRODUCT

Refer to page no. 205

The new Digital Panel Meter is a multi-purpose meter used to control and/or monitor transmitter applications involving level, flow or pressure. The user-friendly/field-programmable device offers a 6 digit LED display, min./max. capability, relay/alarm functions and password protection; all which complement the expanding Ashcroft transducer line.

TYPE 4080, 4480 PNEUMATIC TRANSMITTER

OUTPUT RANGES, PSI: 3-15 & 3-27 (see note below for vacuum application)

SUPPLY AIR REQUIREMENTS:
18-20 psi for 3-15 psi range;
30-35 psi for 3-27 psi range

AIR CONSUMPTION SCFM: 0.1

SPEED OF RESPONSE: Time constant of 4 seconds per 500 ft of tubing

AIR CONNECTION: ¼ NPT Female

ACCESSORIES: See optional features and accessories

TRANSMISSION DISTANCE: 1000 ft

MOUNTING WEIGHT:
Approximate weight 9 lb

REPEATABILITY % OF SPAN: 0.15

ACTUATION: Bourdon Tube

INPUT SENSING ELEMENT MATERIAL:
316 SS

AMBIENT TEMPERATURE EFFECT:
½% per 50°F

PROCESS CONNECTION:
½ NPT (ordering code 04L)

Note: Vacuum application: The transmitted air pressure increases as the measured vacuum approaches zero

Refer to page no. 206

The Ashcroft transmitter is a self-nulling motion- balance instrument, using a pneumatic relay operating on the nonbleed force balance principle for converting input pressures into proportional low air pressure signals for transmittal to remote indicators or controllers.

ASHCROFT®

Quick Guide
Temperature
Instruments

EI, CI & EL INDUSTRIAL BIMETAL THERMOMETERS

ACCURACY
ASME B 40.3 Grade A (±1% of span)

DIAL SIZE
EI, CI 2˝, 3˝, 5˝ (EL 3˝, 5˝)

STEM/BULB DESIGN
Rigid stem 0.250˝ dia.

RECALIBRATOR
(EI, EL external), (CI none)

SEALING DESIGN
Hermetically sealed; EL liquid filled

DAMPENING
Silicone-dampened bimetal coil;
EL liquid filled

CONNECTION LOCATION
EI rear, lower, Everyangle™ mount
CI rear, lower
EL rear, Everyangle mount

CONNECTION SIZES (NPT)
Plain
¼ (2˝ sizes only)
½ and ½ fixed or union (3˝, 5˝ sizes only)

STEM LENGTH
2½˝-60˝

RANGES
–80°F to 1000°F, –50°C to 500°C
EL –40°F to 550°F, –20°C to 300°C

CASE/RING MATERIAL
Stainless steel

CASE/BULB MATERIAL
Stainless steel

WINDOW
EI, CI glass (EL Polycarbonate)

Refer to page nos. 209-213

General industrial temperature applications including gases, liquids, and other processes. All stainless steel construction.

600A & 600B DURATEMP® THERMOMETERS

ACCURACY
ASME B 40.3 Grade A (±1% of span)

DIAL SIZE
600A – 4½˝, 6˝
600B – 4½˝

STEM/BULB DESIGN
Rigid stem 0.375˝ dia. (600B)
Bendable 0.375˝ dia. (600A)

RECALIBRATOR
Adjustable pointer

SEALING DESIGN
Weatherproof

DAMPENING
Silicone-encapsulated helical Bourdon tube

CONNECTION LOCATION
600A – rear, lower – remote mount
600B – Everyangle – direct mount

CONNECTION SIZES (NPT)
½˝ fixed or union

STEM LENGTH
6˝-36˝ – 600B

CAPILLARY LENGTH
5˝-80˝ – 600A

RANGES
–320°F to 1200°F
–200°C to 650°C

CASE/RING MATERIAL
Stainless steel, aluminum, phenol

CASE/BULB MATERIAL
Stainless steel

CAPILLARY MATERIAL
600A– 300 Series stainless steel

WINDOW
Glass

Refer to page nos. 217-223

Rugged applications including gases, liquids and other processes. Wide temperature ranges including remote monitoring.

ASHCROFT®

Quick Guide Pressure and Temperature Switches

SINGLE SETPOINT WATERTIGHT ENCLOSURES

B-SERIES

FEATURES

Enclosure:
Watertight epoxy-coated aluminum NEMA 4, 4X, IP66

Switch Function:
Single setpoint, fixed deadband, SPDT (or)
Single setpoint, fixed deadband, (2) SPDT (DPDT action)

Wetted Materials:
Stainless steel and Buna,*Teflon® or Viton® (or)
All-welded stainless steel (or)
All-welded Monel

Ranges:
Pressure: vac. thru 3000 psi
Temperature: –40°F thru 750°F
Differential Pressure: 30 in.H_2O diff. thru 600 psid
H-Series Pressure: 1000 – 7500 psi

U.L. and CSA LISTED

*Registered trademark of E. I. DuPont

LOOK FOR THESE MARKS ON OUR PRODUCTS

Refer to page nos. 239-240

General purpose switches for most industrial and process applications. Models are available for steam and fuel pressure-limit controls on boilers and burners. Ideal for compressors, turbines, filters, blowers, etc.

SINGLE SETPOINT EXPLOSION PROOF ENCLOSURES

B-SERIES

FEATURES

Enclosure:
Explosion proof, NEMA 7/9, IP66

Switch Function:
Single setpoint, fixed deadband, SPDT (or)
Single setpoint, fixed deadband, (2) SPDT (DPDT action)

Wetted Materials:
Stainless steel, Buna, Teflon® or Viton® (or)
All-welded stainless steel (or)
All-welded Monel

Ranges:
Pressure: vac. thru 3000 psi
Temperature: –40°F thru 750°F
Differential Pressure: 30 in.H_2O diff. thru 600 psid

U.L. or CSA LISTED, ATEX and IECEx models for Hazardous locations now available.

Dual Seal Rating now available

LOOK FOR THESE MARKS ON OUR PRODUCTS

Refer to page nos. 241-242

Ashcroft 700 series has been developed for most applications found in process plants U.L. or CSA LISTED.
All models have similar performance characteristics to the popular Ashcroft B400 Series switch line, which has been used throughout the world's plants and mills for over 25 years. They feature rugged, reliable diaphragm-sealed piston actuators, snap-acting contacts and all-popular wetted materials and process connections. Dual Seal Rating models available. Optional hermetically sealed contacts, Monel or fire-safe actuators and scores of options allow you to choose a model for any application.

DUAL SETPOINT WATERTIGHT ENCLOSURES

L-SERIES

FEATURES

Enclosure:
Watertight epoxy-coated aluminum NEMA 4, 4X, IP66

Switch Function:
Single setpoint, fixed deadband, SPDT contacts (or)
Single setpoint, fixed deadband,(2) SPDT contacts (DPDT action) (or)
Single setpoint, adjustable deadband, SPDT contacts (or)
Dual setpoint, fixed deadband, (2) SPDT contacts, (DPDT action)

Wetted Materials:
Stainless steel and Buna, Teflon® or Viton® (or)
All-welded stainless steel (or)
All-welded Monel

Ranges:
Pressure: vac. thru 3000 psi
Temperature: –40°F thru 750°F
Differential Pressure: 30 in.H_2O diff. thru 400 psid

U.L. and CSA LISTED

LOOK FOR THESE MARKS ON OUR PRODUCTS

Refer to page nos. 247-248

Easy-to-use L-Series switches are specifically suited for the OEM seeking more features in a snap-acting switch. Single or dual setpoints and fixed or adjustable deadband models with many wetted materials and electrical ratings are offered. This snap-acting switch also replaces older mercury models and is cost effective.
L-Series switches are ideal for blowers, generators, scrubbers, precipitators, compressors and turbines.

DUAL SETPOINT EXPLOSION PROOF ENCLOSURES

P-SERIES

FEATURES

Enclosure:
Watertight epoxy-coated aluminum explosion-proof NEMA 7/9, IP66

Switch Function:
Single setpoint, fixed deadband, SPDT contacts (or)
Single setpoint, fixed deadband (2) SPDT contacts (DPDT action) (or)
Single setpoint, adjustable deadband, SPDT contacts (or)
Dual setpoint, fixed deadband (2) SPDT contacts, (DPDT action)

Wetted Materials:
Stainless steel and Buna,Teflon® or Viton® (or)
All-welded stainless steel (or)
All-welded Monel

Ranges:
Pressure: vac. thru 3000 psi
Temperature: –40°F thru 750°F
Differential Pressure: 30 in.H_2O diff. thru 400 psid

U.L. or CSA LISTED

Dual Seal Rating now available

LOOK FOR THESE MARKS ON OUR PRODUCTS

Refer to page nos. 251-252

More varieties and more features are available in the highly reliable P-Series switch which is especially suited for process and refinery applications. Dual chamber design allows setpoint changes to be made safely, even with power connected. Features include NEMA 4X/ NEMA 7/9 enclosure, with single or dual setpoints, fixed or adjustable deadbands, with many wetted materials and electrical ratings. Dual Seal Rating models available. Optional, all-welded stainless steel or Monel actuators are ideal for applications requiring NACE or fire-safe conformance. Optional UL listed, hermetically sealed switch contacts improve safety and reliability.

ASHCROFT®

Quick Guide Pressure and Temperature Switches

WATERTIGHT STAINLESS STEEL ENCLOSURES

G-SERIES

FEATURES

Enclosure:
Watertight 316 stainless steel NEMA 4, 4X, IP65

Switch Function:
Single setpoint, fixed deadband, SPDT contacts (or)
Single setpoint, fixed deadband (2) SPDT contacts (DPDT action) (or)
Single setpoint, adjustable deadband, SPDT contacts (or)
Dual setpoint, fixed deadband (2) SPDT contacts (DPDT action)

Wetted Materials:
Stainless steel and Buna, Teflon® or Viton® (or)
All-welded stainless steel (or)
All-welded Monel

Ranges:
Pressure: vac. thru 3000 psi
Temperature: –40°F thru 750°F
Differential Pressure: 30 in.H_2O diff. thru 400 psid

U.L. and CSA LISTED

LOOK FOR THESE MARKS ON OUR PRODUCTS

Refer to page nos. 244-245

The stainless steel enclosure offers greater corrosion protection for this high-performance switch in breweries, dairies, chemical and petrochemical plants, offshore rigs and pulp and paper mills. Our standard diaphragm-sealed piston actuators and a variety of wetted materials are available in these pressure, temperature and differential pressure switches.

COMPACT EXPLOSION PROOF PRESSURE

F-SERIES

FEATURES

Enclosure (Body):
Explosion-proof, anodized aluminum NEMA 7/9, IP66

Switch Function:
Single setpoint, field-adjustable fixed deadband, SPDT contacts (or)
Single setpoint, field-adjustable fixed deadband, (2) SPDT contacts (DPDT action)

Wetted Materials:
316 stainless steel pressure connection and choice of:
Buna N, Teflon® or Viton® diaphragm and O-ring (or)
All-welded 316 stainless steel diaphragm

Ranges:
Pressure: vac. thru 4000 psi

U.L. and CSA LISTED

LOOK FOR THESE MARKS ON OUR PRODUCTS

Refer to page no. 243

Compact size facilitates mounting in panels and other installations where space is a premium.
Standard hermetically sealed switch element and sealed conduit connection eliminate the possibility of condensation entering the enclosure from the conduit. Standard 1/2 NPTF pressure connection makes retrofit on existing installations quick and easy.

MINIATURE WATERTIGHT PRESSURE SWITCHES

A-SERIES

FEATURES

Enclosure:
NEMA 4X watertight, IP67

Switch Function:
Single setpoint, fixed deadband, factory set SPDT or DPDT contacts, not field adjustable (or)
Single setpoint, fixed deadband, field-adjustable SPDT or DPDT contacts

Wetted Material:
316 stainless steel piston w/Buna N or Viton® or 316 stainless steel welded diaphragm actuator)
Single Switch – SPDT
Dual Switch DPDT (not available with "S" actuator) with <100 psi range

Ranges:
Vac thru 7500 psi.

U.L. and CSA LISTED

SIL 3 capable

LOOK FOR THESE MARKS ON OUR PRODUCTS

CRN (Stainless Steel Enclosure)

Refer to page no. 237

You should consider Ashcroft A-Series pressure switches for use on heavy vehicles, engines and compressors, electronics processing and medical equipment, food and beverage processing equipment, garbage compactors, machine tools, or any equipment where space is a consideration. This series is especially suitable for OEM configuration.

MINIATURE EXPLOSION PROOF PRESSURE SWITCHES

A-SERIES

FEATURES

Enclosure:
NEMA 7/9 explosion proof, IP66

Switch Function:
Single setpoint, fixed deadband, factory set SPDT or DPDT contacts, not field adjustable (or) Single setpoint, fixed deadband, field-adjustable SPDT or DPDT contacts

Wetted Material:
Stainless steel
(Buna N, Viton® or welded diaphragm actuator)
Single Switch – SPDT
Dual Switch DPDT (not available with "S" actuator) with <100 psi range

Ranges:
Vac thru 7500 psi.

U.L. and CSA LISTED

AM, ATEX, IECE, SIL 3 capable

LOOK FOR THESE MARKS ON OUR PRODUCTS

CRN (Stainless Steel Enclosure)

Refer to page no. 238

You should consider Ashcroft A-Series pressure switches for use on heavy vehicles, engines and compressors, electronics processing and medical equipment, food and beverage processing equipment, garbage compactors, machine tools, or any equipment where space is a consideration. This series is especially suitable for OEM configuration.

ASHCROFT®

Quick Guide Pressure and Temperature Switches

ELECTRONIC PRESSURE SWITCHES

N-SERIES

FEATURES

Enclosure:
NEMA 4X watertight or NEMA 7/9 explosion proof, IP66

Switch Function:
Single setpoint with adjustable deadband

Wetted Material:
Stainless steel

Ranges:
60 thru 20,000 psi. Deadbands as low as 0.1% of range.

Optional process and setpoint indication and 4-20mA transmitter ouput now available.

Refer to page no. 249-250

The Ashcroft N-Series electronic pressure switch combines the popular K-Series polysilicon thin film pressure transducer sensor and rugged, epoxy-coated enclosures. The result is a highly reliable pressure switch that is ideal for high cycle, high pressure, or difficult deadband applications.

Typical applications include: machine tools, injection molding machines, presses, pumps, hydraulic systems, turbines, and compressors.

STANDARD DIFFERENTIAL PRESSURE SWITCH

Small size and high overpressure capability make our differential pressure switch ideal for most process and industrial applications. Minimum static working pressures of 500 psi allow use on the most difficult filter applications.

We use a unique combination of diaphragm-sealed piston actuators to get our high static pressure performance in 12 ranges.

For inches of water ranges, we use a large diaphragm for sensitivity which results in lower, more conventional working pressure. Consult the factory for application assistance on differential pressure switch selection.

Refer to page nos. 239

ATEX APPROVAL FOR HAZARDOUS LOCATONS

ATEX is a European designation that deals with standards for equipment and protective systems intended for use in potentially explosive atmospheres. This approval is required for switches intended for use in hazardous locations, especially important to OEMs who export to Europe and contractors specifying or purchasing products for European applications.
XCN option adds special features to Ashcroft 700-Series switch enclosures that meet the requirements for the highest levels of security and danger, such as:

- Special locking device requiring an Allen wrench to remove cover
- Special vents that blow out should the diaphragm rupture, thus preventing pressure build-up in the enclosure
- Special conduit plug requiring an Allen wrench for removal
- Available on pressure, temperature and d/p models
- Meets explosion class Ex d IIC T6
- IECEx models available
- Dual Seal Rating models available

LOOK FOR THIS MARK ON OUR PRODUCTS

Refer to page nos. 241-242

U.L. LISTED STEAM LIMIT CONTROL

The Ashcroft steam-limit control switch is designed for use on boilers equipped with electrically operated burners. The limit control is an adjustable pressure-operated switch set to stop burner operation when the recommended safe boiler working pressure is exceeded.

We recommend a stainless steel diaphragm for steam service. A pigtail siphon should also be used to reduce the possibility of high temperature affecting switch performance. This listing is available for setpoints up to 300 psi.

LISTED

LOOK FOR THIS MARK ON OUR PRODUCTS

Refer to page nos. 239-240

ASHCROFT®

Quick Guide
Pressure and
Temperature Switches

U.L. LISTED PRESSURE LIMIT CONTROL

The Ashcroft medium-pressure gas and oil limit control switch is designed for use with air, LP gas, natural gas, #1 and #2 fuel oil and #6 oil preheated to 240˚F. This limit control is an adjustable pressure-operated switch with a secondary chamber to prevent fuel from entering the switch enclosure in the unlikely event that the diaphragm develops a leak. The control shuts down a fuel pump in high or low pressure conditions.

LOOK FOR THIS MARK ON OUR PRODUCTS

Refer to page nos. 239-240

DDS-SERIES DIFFERENTIAL PRESSURE SWITCH DIAPHRAGM SENSING ELEMENT

250 psi DDS-Series Differential Pressure Switch

15000 psi DDS-Series Differential Pressure Switch

FEATURES

Ranges:
0-6 IWD TO 0-150 IWD

Static Pressure Ranges:
250 PSI or 1500 PSI

Rugged:
NEMA 4X & 12 Housing Std.
Class I, Div. I, Gr. C & D Available SPDT or DPDT Contacts

Maximum Ambient Temperature:
180°F

Minimum Ambient Temperature:
–20°F

Pressure Connection:
1/4 NPT Female

Electrical Connection:
3/4 NPT Female

Housing:
Cast Aluminum

Deadband:
Fixed

Sensitivity:
1% of range

Drift:
<1% of range (100,000 operations)

Weight:
Approximately 6 lbs.

Contact Ratings:
15A-125, 250, 480 VAC (general purpose other micro switches available)

Contact Listings:
UL Listed

Port Material:
Aluminum or Stainless Steel

Diaphragm Material:
Buna N, Viton or Teflon

Setpoint Adjustment:
Screw type, field adjustable

LOOK FOR THIS MARK ON OUR PRODUCTS

Refer to page no. 258

The Ashcroft DDS-Series differential pressure switch is designed to sense low differential pressures between high pressure sources.

DIGITAL GAUGES

ASME B 40.1 Grade 2A (±0.5% of span), ASME B40.7

Type 2030 Series
Digital Sanitary Gauge 53

Type 2089, 2086, 2084 Digital Test Gauge ... 54

Type 2074, 2174, 2274
Digital Industrial Gauge 55

Type DG25 General Purpose
Digital Gauge 56

ASHCROFT®

Type 2030 Series
Digital Sanitary Gauge 3˝

AT LAST, A MULTI-FUNCTIONAL SANITARY GAUGE FROM THE EXPERTS IN PRESSURE MEASUREMENT

The Ashcroft® sanitary digital gauge saves money, time and space. Now, one digital pressure gauge can replace three instruments . . . a mechanical pressure gauge, a transducer and a switch! Save space, installation costs and the cost of additional instruments and pipe cut-outs.

Features

- 4/20mA Output (optional)
- (1) or (2) SPDT Switches (optional)
- .25% F.S. Terminal Point Accuracy
- IP 65 Weatherproof Case Suitable For Wash Downs
- Large Display
- Easy-to-Use Password Protected Menu With:
  - 5 Backlite Display Options
  - 12 Engineering Units
  - Menu Configure Feature
  - Update Rate
  - Dampen Rate
  - Auto-Off
- Material Traceability Certification to EN 10204: 2004 3.1†

†Excludes 2036 Series

SPECIFICATION

Type:
Conventional Tri-clamp: 2032 (battery), 2132[1] loop (4-20mA, 12-36 Vdc) 2232[1] line (12-36 Vdc)
In-line Tri-clamp: 2036 (battery), 2136 (12-36 Vdc), 2232 line (12-36 Vdc)
Accuracy: Terminal point
Full Scale: .25% F.S. accuracy
Case Size: 3˝
Case Material/Finish: (3˝) 300 series SS, Electropolished
Case Enclosure Rating: Weatherproof, IP65, NEMA 4
Wetted Parts: 316 SS
Fill Fluid: Glycerine standard, Food Grade Silicone (XCZ), Food Grade Mineral Oil (XMY)
Tri-Clamp Connection: Direct, in-line 1½ ˝, 2 ˝, Ashcroft remote in-line (XRE),
Seal Surface Finish: 12-20Ra
Connection Location: Lower
Ranges: 15 psi thru 1,000 psi including metric, compound & vac
Process Temp. Limits(2): 14°F / 275°F (–10°C / 135°C) to withstand clean in place (CIP) & steam in place (SIP)
Ambient Temp. Limits(3): 14°F / 140°F (–10°C / 60°C)
Temperature Error: ±.22% per 10°F, (12°F) (Span and Zero shift can be eliminated by rezeroing the gauge at operating temperatures. Temperatures must be within process temperature limits)
Storage Temperature: –4°F / 158°F (–20°C / 70°C)
Overrange Pressure: 2x range of gauge

DISPLAY

Type: LCD
Display Digits: 5 digits
Character Height: .60˝
Backlite: Off by default (optional)
Bar Graph: Yes
Battery Life: 500 Hrs., Battery Life Indicator – standard
Agency Approvals: CE (excludes XRE variation)Material Traceability Certification to EN 10204: 2004 3.1 standard ASME B40.7

KEYBOARD FUNCTIONS

On/Off: Manually turns unit on & off (auto off options in menu)
Zero/Clear: Zeros display or clears min/max values when displayed
Min/Max Arrow Key: Stores min & max values, arrow key allows for scrolling thru menu items
Menu: Allows for changes to default settings (see below)
Backlite (optional) Arrow Key: Manually turns backlite on & off (auto off options in menu), arrow key allows for scrolling thru menu items
Enter: Selects items in the menu

MENU MODE

Engineering Units (Units): 10 units of measurement are available; psi, inH_2O with 3 temp. options: 20°C, 60°F, 4°C*, mmHg, ftH_2O, mPa, kPa, kg/cm^2 & bar
Configuration Mode (Config): Allows for changes to default settings of gauge
Bar Graph (Graph): Allows for adjustment of bar-graph & 4-20mA output
Auto Off (Off): Allows for changes to auto off of gauge: 5 options:, 30 min., 10 min., 5 min., 2 min., never
Update Rate (Update): 4 options: 100mili-sec, 1 sec, 500mili-sec, 200mili-sec,
Dampening (Damp): 6 options: none, average 8, 6, 4, 2 times per 100ms
Backlite Lit (optional): 5 options: NEVER, 10 sec, 30, sec, 1 min, 5 min.
Zero Disable: Zero "lockout" feature
Field Recalibration: Zero, span & midscale (password protected)
Calibration: Allows for recalibration of zero & span (includes factory default calibration)

OPTIONS

4-20mA Output
Line Powered: 12-36 Vdc
Switching: (XU1 code) (1) or (XU@ code) (2) SPDT switches, (requires line power), (max. contact 30Vdc, 1 amp, 125Vac, .5 Amp) switches adjustable to 100% of range
Remote Mount Seal: (RE code) standard with 10˝ shielded cable

NOTES

(1) 3˝ shielded cable standard.
(2) Rezero gauge often after exposure to elevated temperatures and use.
(3) The 2030 Series Digital Gauge is not suitable for an autoclave.

RANGES

psi	in. Hg (Vacuum)	Comp. (psi)	mmHg (pressure)	in. Hg (pressure)	in. H_2O
15	30*	–15/0/15*	800	30	400
30		–15/0/30*	1000	60	800
60		–15/0/60*	2000	100	1000
100		–15/0/100*	3000	160	
160			5000	200	
200			10,000	300	
300				400	
600				600	
800				800	
1000					

mBar	ft. H_2O	mPa	kPa	Bar/ KSC
1000	60	1	100	1
1500	160	1.6	160	1.6
2000	200	2.5	250	2.5
2500	300	4	400	4
4000	400	6	600	6
5000	600	10	1000	10
8000	1000	16	1600	16
10,000		25	2500	25
15,000		40	4000	40
20,000		60	6000	60

*Note all compound and vacuum ranges require mineral oil fill (XMY option)

HOW TO ORDER

30	2032	SD	15L	RE	160#

Dial Size: 3˝
Case Type Number:
2032 Battery
2132 4-20mA loop powered
2232 12-36 Vdc
2036 In-line battery
2136 In-line 4-20mA loop powered
2236 In-line 12-36Vdc
Wetted Parts: 316L SS
Process Connection: 1.5,˝2.0˝ Tri-Clamp
Variations: RE remote mount in-line design
Range: 160 psi

Consult factory for guidance in product selection
Phone (203) 378-8281 or visit our
web site at www.ashcroft.com

ASHCROFT®

Precision Digital Test Gauge
Types 2089, 2086 and 2084

- *Unmatched accuracy of ±.05% total error band*
  - *Temperature corrected from 0/150°F*
- *Breakthrough readability and portability*
  - *5 digit LCD display*
  - *Display height of .66˝*
- *Rugged portable design*
  - *Weatherproof NEMA IV, IP65 case*
  - *CE, FM, CSA*
  - *Stainless steel case-to-socket weld for strength*
  - *Stainless steel cover protects keypad*
- *Global/highly configurable*
  - *Nine options including 12 units of measure, 7 languages and password protected calibration and disable function*
- *Safety features include*
  - *Pressure range on keypad to reduce accidental overpressure*
  - *Proof pressure 2 x gauge range*
  - *Meets ASME B40.7*
- *% of reading bar graph*

LOOK FOR THESE AGENCY MARKS ON OUR PRODUCTS

PRODUCT SPECIFICATIONS

Type:	2089 (0.05% F.S. accuracy), 2086 (0.10% F.S. accuracy), 2084 (0.25% F.S. accuracy)
Accuracy:	0.05%, 0.10% or 0.25% all Full Scale, Terminal Point, Total Error Band (TEB) Including Hysteresis, Linearity, Repeatablilty and Temperature (0/150°F)
Case Size:	3˝
Case Material:	300 Series Stainless Steel
Case Finish:	Electropolished/Tumbled
Case Rating:	Weatherproof, IP65, NEMA 4
Wetted Parts:	316 Stainless Steel
Inlet Fittings:	¼ NPT Male, JIS, DIN, SAE, (others on application)
Connection:	Lower (6 o'clock), top, side
Ranges:	Vac. thru 7000 psi (see engineering units below for other units of measurement)
Units:	psi =**#** bar=**BR** kPa=**KP** mPa=**MP** inHg=**IM** inH_2O=**IW** mmH_2O=**MMW** cmH_2O=**CMW** millibar=**MB** kg/cm^2=**KSC**
Operating Temp.:	0/150°F (–18/65°C)
Storage Temp.:	–40/180°F (–40/82°C)
Temp. Corrected:	Yes
DISPLAY	
Type:	LCD
Display Digits:	5, 99999 display counts
Character Height:	.66˝
Backlite:	Off by default
Bar Graph:	Yes
Battery Life:	<1000 hrs. (3 AAA alkaline batteries)
Agency Approvals:	CE EN 50082-1 (1997), FM, CSA Note: FM/CSA approval not valid on vac. and 15# & vac. ranges
KEYPAD FUNCTIONS	
On/Off:	Manually turns unit on and off (auto off options in configuration menu
Backlite:	Manually turns backlite on and off (auto off options in configuration menu)
Min/Max:	Stores min. and max. values when displayed
Zero/Clear:	Zeros display or clears min. and max. values when displayed

Enter:	Selects items in configuration menu
Configuration Mode:	Allows scrolling through configuration menus to select available options
Engineering Units:	psi,˝Hg, ˝H_2O*, ftSW, Bar, mBar, kPa, mPa, mmHg, cmH_2O, mmH_2O, kg/cm^2 (*Allows choice of reference temperatures 4°C, 20°C or 60°F)
Update Rate:	Four Selections: 10x/sec, 5x/sec, 2x/sec, 1x/sec
Auto Off:	Five Options: Never, 2 min., 5 min., 15 min., 30 min.
Dampening:	Five Selections: None, average 2, 4, 6, 8 readings
Language:	Seven Languages: English, Spanish, French, Italian, German, Portuguese, Dutch
Backlite:	Five Selections: On/off, 10 sec., 30 sec., 1 min., 5 min.

Calibrate:	Zero and Span (password protected)
Contrast:	Seven available options
Disable:	Locks in current configuration settings.
Calibration Chart:	10 point individual calibration chart, standard for Type 3089, others optional (XC4)
Accessories:	300 Series SS Protective Cover, Protective Carrying Pouch
Optional Features:	Flange for Panel Mounting = **FF,** Metal Tag Wired to Case = **NH,** Paper Tag Wired to Case = **NN,** Protective Rubber Boot = **B1,** Certificate of Conformance = **C1,** Calibration Certificate (2084 & 2086 only. Standard w/2089) = **C4,** Weatherproof ABS Carrying Case = **S7,** Clean for Gaseous Oxygen Service = **6B,** Clean for Liquid Oxygen Service = **6D**

DIGITAL PRECISION TEST GAUGE RANGES:

psi Gauge	psi Compound	psi Absolute	bar/kb/cm^2 Gauge	bar Compound	mmH_2O Gauge	mPa Gauge	mBar/cmH_2O Gauge	kPa Gauge	Temp. Options
vac.	15 & vac.	15	1	–1 to 0	3000	1	250	25	4°C
5	30 & vac.	25	1.6	–1 to 1	5000	1.6	300	40	20°C
10	60 & vac.	50	2.5	–1 to 2	10,000	2.5	400	60	60°F
15	100 & vac.		4	–1 to 30		6	500	160	
30			6	–1 to 30		10	600	250	
60			10			40	1000	400	
100			16				1600	600	
160			25				2000	1000	
200			40				2500		
300			60				4000		
500			160				5000		
600			250				6000		
800			400				10,000		
1000			500						
2000									
2500									
3000									
5000									
700									

TO ORDER THIS DIGITAL TEST GAUGE:

Select:	Example:	30	2089	SD	02L	100#	B1, 6B
1. Dial Size: 3˝ = **30**							
2. Model: **2084, 2086, 2089**							
3. Case: 316 SS = **SD**							
4. Connections: ¼ NPT Male Lower = **02L**							
5. Range Value: (see range chart)							
Unit of Measurement: (see "Units" list)							
6. Options: (see "Optional Features" list)							

Consult factory for guidance in product selection
Phone (203) 378-8281 or visit our
web site at www.ashcroft.com

ASHCROFT®

Digital Industrial Gauge
Types 2074, 2174 and 2274

- *A Multi-Functional Digital Gauge with Optional:*
  - *4/20mA Output*
  - *(1) or (2) SPDT Switches*
- *±.25% of Span Terminal Point Accuracy*
- *IP 65 Weatherproof Case*
- *Three Case Options: Stainless Steel, Fiberglass Reinforced Thermoplastic or Aluminum*
- *Extra Large Display*
- *Intrinsically Safe, Class I, Div. 1 (optional)*
- *Easy-to-Use Menu Options: (all*
  - *Five Backlite Display Options*
  - *Twelve Engineering Units*
  - *Menu Configure Feature*
  - *Update Rate*
  - *Dampen Rate*
  - *Auto-Off*

LOOK FOR THESE AGENCY MARKS ON OUR PRODUCTS

PRODUCT SPECIFICATIONS

Type:	2074 (battery) 2174 (loop) 4-20mA (12-36Vdc) 2274 (line) (12-36Vdc)
Accuracy:	±.25% of span, terminal point
Case Size:	3″, 4½″
Case Material:	3″ stainless steel, 4½″ fiberglass reinforced thermoplastic or black epoxy coated aluminum
Case Encl. Rating:	Weatherproof, IP65
Wetted Materials:	17-4 stainless steel (sensor), 316 stainless steel (socket)
Socket Size:	¼ or ½ NPT, JIS, DIN, SAE, (½ NPT only with 4½″ case, others on application)
Socket Location:	Lower (6 o'clock), top, side
Ranges:	15 psi/Vac. thru 20,000 psi (see engineering units below for other units)
Operating Temp.:	14/140°F (10/60°C)
Temp. Error:	(Zero & Span) .04%/°F Reference temp. 70°F
Storage Temp.:	–4/158° (–20°/70°C)

DISPLAY

Type:	LCD
Display Digits:	Five (5)
Character Height:	3″ case: .60″, 4½″ case: .88″
Backlite:	Optional
Bar Graph:	Yes
Battery Life:	3″ <500 hrs., 4½″ <2500 hrs.
Agency Approvals:	CE, FM (Intrinsically Safe Class I, Div 1) (optional)

KEYPAD FUNCTIONS

On/Off:	Manually turns unit on and off
Zero/Clear:	Zeros display or clears min. and max. values when displayed
Min/Max ▼ (down) Arrow Key:	Stores min & max values, arrow key allows for scrolling thru menu items
Menu Key:	Provides access to menu options
Backlite ▲ (up) Arrow Key: (Backlite optional)	Manually turns backlite on and off, arrow key allows for five menu options. ▲ (up) arrow key allows for scrolling thru menu options
Enter:	Selects items in the menu

MENU MODE

Engineering Units:	10 units of measurement are available; psi, In. H_2O (with three temp. options: 20°C, 60°F, 4°C*), Ft. H_2O, mPa, mBar, kPa, kg/cm2, Bar, inHg and mmHg
Configuration Mode: (Config):	Allows for changes to default settings of gauge Including zero disable feaure
Bar Graph (Graph):	Allows for adjustment of bargraph and 4-20
Auto Off (Off):	Allows for changes to auto off of gauge, five options: Never, 2 min., 5 min., 15 min., 30 min.
Update Rate:	Four options: 100 ms, 200 ms, 500 ms, 1 sec
Dampening:	Six options: None, average, 2, 4, 6, 8 times per 100ms
Backlite:	Five options: Never, 10 sec., 30 sec., 1 min., 5 min.
Field Recalibration:	Allows for recalibration of zero, mid-scale and span (password protected)

OPTIONS

Description	Code	Case Size
Case Options		
Aluminum Case (black epoxy coated) (Glass reinforced thermoplastic case standard)	AY	4½″ only
Switch Options		
(1) SPDT Switch (12-36Vdc)	U1	3″, 4½″
(2) SPDT Switch (12-36Vdc)	U2	3″, 4½″
Line Power with 4-20mA output (Line power (Type 2274) required for switching options) (Terminal blocks standard with 4½″ case) (3′ shielded cable standard)	AO	3″, 4½″
Wiring Options		
(3′ shielded cable standard) (Terminal blocks standard with 4½″ case.)	EN	4½″
Keypad Options		
Backlite	BL	3″, 4½″
Miscellaneous Options		
Battery Backup (Battery standard with Type 2074) (Available with Types 2174 & 2274)	BK	3″, 4½″
Weatherproof ABS Gauge Carrying Case	S7	3″ only
Protective Rubber Boot (black)	B1	3″ only
Protective Rubber Boot (orange)	B2	3″ only
Protective Front Cover	PP	3″ only
Individual Certified Calibration Chart	C4	
Cleaned for Gaseous Oxygen Service	6B	

DIGITAL INDUSTRIAL GAUGE RANGES (Units In horizontal rows not equivalent ranges):

psi	in.Hg (vacuum)	Comp. (psi)	mmHg (pressure)	in.Hg (pressure)	in. H_2O	mBar	ft. H_2O	mPa	kPa	Bar/ KSC
15	30	15#&Vac	800	30	400	1000	60	1	100	1
30		30#&Vac	1000	60	800	1500	160	1.6	160	1.6
60		60#&Vac	2000	100	1000	2000	200	2.5	250	2.5
100		100#&Vac	3000	160		2500	300	4	400	4
160			5000	200		4000	400	6	600	6
200			10,000	300		5000	600	10	1000	10
300				400		6000	1000	16	1600	16
600				600		10,000		25	2500	25
800				800		15,000		40	4000	40
1000						20,000		60	6000	60
1500								100	10,000	100
2000								140	16,000	160
3000									25,000	250
5000									40,000	400
8000									60,000	600
10,000									100,000	1000
15,000									140,000	1400
20,000										

TO ORDER THIS DIGITAL INDUSTRIAL GAUGE:

Select: **30 2074 SD 02 L 100# XXX**

1. Dial Size: 3″ — 30
2. Type: 2074 — 2074
3. Wetted parts: 316 SS — SD
4. Connections: ¼ NPT — 02
5. Lower: — L
6. Range: 100 psi — 100#
7. Optional Characters: — XXX

Consult factory for guidance in product selection
Phone (203) 378-8281 or visit our
web site at www.ashcroft.com

ASHCROFT®

General Purpose Digital Gauge Type DG25, ±½% of Span Terminal Point Accuracy

- ***0.5% terminal point accuracy (0.25% optional)***
- ***Five-digit LCD display with large .48˝ character size***
- ***Bar graph display (20 segment)***
- ***Nine engineering units of measure plus one user programmable unit***
- ***Capable of measuring gauge, vacuum and compound ranges from –14.7 psi through 25,000 psi***
- ***IP67 weatherproof enclosure***
- ***CE compliant, RoHs compliant, UL and cUL 61010-1***
- ***The versatile and economical choice for a wide variety of applications***

The Ashcroft® DG25 series offers 0.5% of span accuracy. Laser-welded stainless steel sensor and socket make this product suitable for use with a wide variety of pressure media in demanding industrial applications. This series is also available with enhanced accuracy of 0.25% of span making it suitable for many test and measurement uses.

IP67 ingress protection rating means the DG25 is suitable for demanding applications such as equipment wash down.

The DG25 comes standard with many features such as: tare, min and max memory, programmable custom engineering units, and pressure ranges from vacuum to 25,000 psi.

*Shown with Optional Protective Boot & Back Light

PRODUCT SPECIFICATIONS

Accuracy:	0.5% F.S. standard, 0.25% optional includes effects of linearity, hysteresis and repeatability
LCD Display:	Five-digit numeric top line, five-character alphanumeric lower line, 20 segment vertical bar graph, four-segment battery life indicator, dedicated icons for gauge timer, back light timer, tare, min and max
Character Height:	Upper line 0.48˝ (12.19mm,) Lower line 0.24˝ (6.10mm)
View Angle:	12 o'clock
Backlight:	Optional
Engineering Units:	psi, bar, inHg, cmHg, mmHg, kPa, mPa, kg/cm2, ftH2O, and customer defined unit
Ranges:	45 standard psi and bar ranges from –14.7 to 25000 psi, gauge, vacuum and compound ranges available.
Enclosure Matl.:	Case & Back: Polycarbonate/ABS Window: Polycarbonate
Enclosure Rating:	IP67
Protective Boot:	Optional (Black or Orange)
Serial No.:	Yes
Nominal Size:	2.73˝ (70mm) dia.; 1.61˝ (40.9mm) deep; 2.64˝ (67mm) centerline to end of ¼ NPT thread height
Wetted Matl.:	17-4 ph sensor & 316L socket, laser welded
Connection:	¼ NPT lower standard, Options ⅛ NPT, G ¼ B, others consult factory; 6 o'clock (lower) position standard
Battery:	Two AA alkaline batteries
Battery Life:	2000 hours minimum
Battery Indicator:	4 levels
Cycle Life:	10 million cycles
Vibration:	MIL-STD-202G, Method 201A
Shock:	MIL-STD-202G, Method 213B, Test Condition K
Operating Temp:	–4°F to 140°F, (–20°C to 60°C) ambient temp.; –4°F to 176°F, (–20°C to 80°C) process media temp
Storage Temp:	Batteries Installed: –4°F to 140°F, (–20°C to 60°C) Batteries Removed: –4°F to 176°F, (–20°C to 80°C)
Temp. Coef.:	0.04%/°F (–20°F to 180°F) zero and span. Reference Temp. 70°F
Leak Integrity:	10-7 std. cc/sec.
Update Rate:	1Hz, 2Hz, 4Hz,
Keypad Functions:	Three key; available with multi press functionality
Hard Keys:	on/off; Power Symbol and Enter zero; Zero, Tare, and Up Arrow menu Access, Backlight, Down Arrow
Agency Approvals:	CE (heavy industrial), ASME B40.7, RoHs, UL 61010/ cUL
Proof Pressure: % of Span	Vac – 2000: 200% 3000 – 5000: 150% 7500 – 25,000: 120%
Burst Pressure: % of Span	Vac – 2000: 800% 3000 – 5000: 500% 7500 – 25,000: 300%
Options:	**XB3** Pouch with Logo **X6B** Cleaned for Oxygen Service **XC4** Individual Calibration Chart **XNH** Wired SS Tag

TO ORDER THIS TYPE DG25 GAUGE:

Select:	25	DG25	5	1	L	1	N/A	M02	L	3000#	–	XB3

1. Dial Size: 2½˝
2. Case Type Number: DG25
3. Accuracy: (3) 0.25%, (5) 0.50%
4. Type: (1) Battery
5. Backlight: (L), (N) Not Applicable
4. Protective Boot: (0) None, (1) Black, (2) Orange
5. Electrical Connection: (N/A)
6. Connection Size: (M01), (M02), (MG2), (MGA), (F09),
7. Connection Location: (L)
8. Range: 15 psi-25,000 psi
9. Options: (XB3), (X6B), (XC4), (XNH)

Consult factory for guidance in product selection
Phone (203) 378-8281 or visit our
web site at www.ashcroft.com

TEST GAUGES & EQUIPMENT

ASME B 40.100 Grade 3A (±0.25% of span)
ASME B 40.100 Grade 2A (±0.5% of span)
ASME B 40.100 Grade 4A (±0.1% of span)

Type A4A Dial Pressure Gauge 59
±0.25% Type 1082 Analog Test Gauge..... 60
±0.5% Type 1084 Pocket Test Gauge..... 61
Types 2089, 2086 & 2084
Precision Digital Test Gauges
(±.05%, ±.10%, ±.25%) 62
ATE-2 Handheld Calibrator..... 63-64
ST-2A Digital Indicator 65-66
Type 1305D Deadweight Tester 67
Type 1327D/1327CM
Pressure Gauge Comparator 68
PT Digital Pressure Indicator..... 69-70
Type AVC1000/3000
Volume Controller 71

ASHCROFT®

Ashcroft Precision Dial Pressure Gauge Type A4A

- ***±0.1% F.S. accuracy – ASME B40.100, Grade 4A***
- ***Ranges from 15-100,000 psi***
- ***Solid front protective case***
- ***High and low pressure limit stops***
- ***Mirror band dial to eliminate parallax reading error***
- ***Optional temperature compensation maintains 0.1% accuracy from –25 to +125°F***

The Ashcroft precision pressure gauge yields consistent, reliable accuracy through the use of state-of-the-art precision machining and the world's most refined Bourdon tube technology. This eliminates the need for a power source and precludes the associated problems such as susceptibility to electronic line noise, power outage or potential fire hazard. In addition, this mechanical instrument is simple to operate, easy to troubleshoot, and can be readily flushed or purged to remove foreign matter or trapped gas. Accurate and reliable, the Ashcroft A4A sets a new standard for precision test gauges.

STANDARD FEATURES & SPECIFICATIONS

Total Accuracy
±0.1% F.S. Includes Certificate of NIST traceability

Repeatability
±0.02% F.S.

Hysteresis
±0.1% F.S.

Dial
White, high resolution with mirror band

Pointer
Knife edge pointer to eliminate parallax errors

Bourdon Tube
Bleeder tipped for easy flushing or purging

Case
Cast aluminum solid front

Blowout rear cover

Integral panel mounting flange

Ranges
Available in Gauge, Compound, Vacuum and Absolute (requires manual barometric compensation)

A4A

Pointer Travel
350° (15-30,000 psi)
300° (40,000-50,000 psi)
270° (60,000-100,000 psi)

Ranges
0/15-0/100,000 psi

Dial Sizes
6˝ 8½˝ 12˝ & 16˝

INLETS AND BOURDON TUBES (STANDARD VS. OPTIONS)

STANDARD	OPTIONAL
Inlet Location	
Back Fittings	**Bottom or Back Fittings**
• ¼ NPT female fitting (ranges up to and including 10,000 psi)	• ¼ NPT female fitting (standard with back location)
• 9/16-18 UNF-2B high pressure for ¼˝ O.D. high pressure tubing (ranges over 10,000 psi)	• ¼ NPT male
	• ⅛ NPT male or female
	• 9/16-18 UNF-2B high pressure for ¼˝ O.D. high pressure tubing
	•MS33656-4 ma le (7/16-20, 37° flare for ¼˝ flare tubing)
	•AND10050-4/MS33649-4 fe male (7/16-20, 37° flare for ¼˝ flare tubing)
Material and Range	
• Beryllium copper (through 40 psi)	• Beryllium copper (50-10,000 psi)
•403 S S (50 psi and above)	•403 SS (be low 50 psi)

OPTIONAL FEATURES (PROVIDED ONLY WHEN SPECIFIED)

- Custom scales/units of measure
- •The rmal compensation (maintains 0.1% accuracy from –25 to +125°F)
- •Sl otted link (protects movement during sudden pressure release)
- •W all mounting brackets
- •Pe ak load indicator
- •Dua l scale dial

psi

STANDARD BOURDON TUBE MATERIAL**	STANDARD RANGE psi
BERYLLIUM COPPER	0-15
	0-20
	0-25
	0-30
	0-40
403 STAINLESS STEEL	0-50
	0-60
	0-75
	0-100
	0-150
	0-200
	0-250
	0-300
	0-400
	0-500
	0-600
	0-750
	0-1000
	0-1500
	0-2000
	0-2500
	0-3000
	0-4000
	0-5000
	0-6000
	0-7500
	0-10,000
	0-15,000
	0-20,000
	0-25,000
	0-30,000
	0-40,000
	0-50,000
	0-60,000*
	0-75,000*
	0-100,000*

*Available in 8½˝ 12˝ 16˝. Dial face diameters only.
**For optional Bourdon Tube Materials consult factory.

INCHES MERCURY

STANDARD BOURDON TUBE MATERIAL**	STANDARD RANGE INCHES MERCURY
BERYLLIUM COPPER	0-30
	0-40
	0-50
	0-60
	0-75
403 STAINLESS STEEL	0-100
	0-125
	0-150
	0-200
	0-250
	0-300
	0-400
	0-500
	0-600
	0-750
	0-1000
VACUUM	
BERYLLIUM COPPER	–30 to 0
COMPOUND	
	VACUUM-PRESSURE
BERYLLIUM COPPER	15 in.Hg - 15 in.Hg
	30 in.Hg - 30 in.Hg
	30 in.Hg - 60 in.Hg
403 STAINLESS STEEL	30 in.Hg - 100 in.Hg
	30 in.Hg - 150 in.Hg
BERYLLIUM COPPER	30 in.Hg - 15 psi
	30 in.Hg - 30 psi
403 STAINLESS STEEL	30 in.Hg - 60 psi
	30 in.Hg - 100 psi
	30 in.Hg - 150 psi
	30 in.Hg - 300 psi
INCHES WATER	
BERYLLIUM COPPER	0-450
	0-500
	0-600
	0-750
	0-800
	0-1000

MILLIMETERS MERCURY

STANDARD BOURDON TUBE MATERIAL**	STANDARD RANGE MILLIMETERS MERCURY		
BERYLLIUM COPPER	0-760		
	0-1000		
	0-1250		
	0-1500		
	0-2000		
403 STAINLESS STEEL	0-2500		
	0-3000		
	0-4000		
	0-5000		
	bar kg/cm² kp/cm²	kPa	MPa
BERYLLIUM COPPER	0-1	0-100	–
	0-1.6	0-160	–
	0-2	0-200	–
	0-2.5	0-250	–
	0-3	0-300	–
403 STAINLESS STEEL	0-4	0-400	–
	0-5	0-500	–
	0-6	0-600	–
	0-7.5	0-750	–
	0-10	0-1000	0-1
	0-12	0-1200	0-1.5
	0-16	0-1600	0-1.6
	0-20	0-2000	0-2
	0-25	0-2600	0-2.5
	0-30	0-3000	0-3
	0-40	0-4000	0-4
	0-50	0-5000	0-5
	0-60	0-6000	0-6
	0-75	0-7500	0-7.5
	0-100	0-10,000	0-10
	0-125	–	0-12.5
	0-160	–	0-16
	0-200	–	0-20
	0-250	–	0-25
	0-400	–	0-40
	0-500	–	0-50
	0-600	–	0-60
	0-750	–	0-75
	0-1000	–	0-100
	0-1250	–	0-125
	0-1600	–	0-160
	0-2500	–	0-250
	0-4000	*–	0-400
	0-6000	*–	0-600
	0-7000	*–	0-700
VACUUM			
BERYLLIUM COPPER	–1 to 0	–	–

*Available in 8½˝ 12˝ 16˝. Dial face diameters only.

ASHCROFT®

Test Gauge
Type 1082, ASME B 40.100
Grade 3A (±0.25% of span)

- ***Temperature-compensated movement that significantly reduces temperature error***
- ***MicroSpan™ adjustment for ease in span calibration***
- ***Hydraulically staked movement with Teflon-coated gears and bearings improves stability***
- ***Externally adjustable dial on standard model***
- ***White aluminum dial, black numbers with polished mirror band***
- ***High and low pressure movement stops are standard***

The standard Ashcroft® test gauge case style features a solid-front aluminum case with a hinged ring.

The dial has a polished mirror band for pointer reflection to prevent parallax error and is available in 4½″, 6″ and 8½″ dial sizes in both lower and back connection. Pointer is a balanced-friction adjustable design with red knife edge tip for easy reading.

STANDARD RANGES

Pressure psi	kg/cm² - bar	kPa
0/15	0/1	0/100
0/30	0/1.6	0/160
0/60	0/2.5	0/250
0/100	0/4	0/400
0/150	0/6	0/600
0/200	0/10	0/1000
0/300	0/16	0/1600
0/400	0/25	0/2500
0/600	0/40	0/4000
0/800	0/60	0/6000
0/1000	0/100	0/10,000
0/1500	0/160	0/16,000
0/2000	0/250	0/25,000
0/3000	0/400	0/40,000
0/5000	0/600	0/60,000
0/10,000		
Vacuum		
30 in.Hg/0	–1/0	–100/0
Compound		
30 in.Hg/15 psi	–1/1.5	–100/150
30 in.Hg/30 psi	–1/3	–100/300
30 in.Hg/60 psi	–1/5	–100/500
30 in.Hg/100 psi	–1/9	–100/900
30 in.Hg/150 psi		
30 in.Hg/200 psi		
30 in.Hg/300 psi		
30 in.Hg/400 psi		

BOURDON SYSTEM SELECTION

Ordering Code	Bourdon Tube & Tip Material(1) (all joints TIG welded except "A")	Socket Material	Tube Type	Range Selection Limits (psi)	NPT Conn.
A	Phosphor Bronze Tube-Brass Tip, Silver Brazed	Brass	C-Tube	vac/400 psi	¼, ½
P	K Monel	Monel 400	(2)	vac/10,000 psi	¼, ½

(1) For selection of the correct bourdon system material, see the media application table on page 265.
(2) vac through 1500 psi–C-Tube
2000 through 10,000 psi–Helical
See page 260 for optional test gauge carrying case and handle.

TO ORDER THIS 1082 TEST GAUGE:

Select: **45** **1082** **PS** **02L** **2000#**

1. Dial size–4½″, 6″, 8½″
2. Case type–1082
3. Bourdon system selection ordering code
4. Connection size–¼ (02)
5. Connection location–Lower (L), Back (B)
6. Standard pressure range–2000 psi

(★) "S" denotes solid-front case design

Consult factory for guidance in product selection
Phone (203) 378-8281 or visit our
web site at www.ashcroft.com

ASHCROFT®

Pocket Test Gauge
Type 1084, ASME B 40.100
Grade 2A (±0.5% of span)

- ***Available in a 3˝ dial size***
- ***Stainless steel movement with Teflon-coated bearings and pinion gear***
- ***Black, adjustable pointer with red-painted knife-edge tip***
- ***Stainless steel construction***
- ***Zero-adjustable white aluminum dial with polished mirror band***
- ***¼ NPT lower connection only***

With an accuracy of ±0.5%, Grade 2A, plus rugged stainless steel construction, the Ashcroft® Type 1084 more than exceeds the requirements for on-the-spot inspections. To improve accuracy, stability and socket thread life, the Bourdon tube and socket assembly is made of type 316 stainless steel with all-welded construction; this system is standard for all ranges.

To make reading easier and faster, each unit is provided with a new, highly readable dial. Reading error caused by parallax is eliminated by aligning the knife-edge tip pointer with its reflection in the mirror band on the dial. Also available is a stainless steel cover that fits securely over the window and protects the gauge from damage while being carried in a tool box or pocket. An attractive, cushioned Nylon fabric pouch with carrying strap is offered as standard equipment.

STANDARD RANGES

Pressure psi	kg/cm² - bar	kPa
0/15	0/1	0/100
0/30	0/2	0/200
0/60	0/3	0/300
0/100	0/4	0/400
0/150	0/7	0/700
0/200	0/11	0/1100
0/300	0/14	0/1400
0/400	0/20	0/2000
0/600	0/28	0/2800
0/1000	0/40	0/4000
	0/70	0/7000
Vacuum		
30 in.Hg/0	–1/0	–100/0
Compound		
30 in.Hg/15 psi	–1/1	–100/100
30 in.Hg/30 psi	–1/3	–100/300
30 in.Hg/60 psi	–1/6	–100/600
30 in.Hg/100 psi	–1/10	–100/1000
30 in.Hg/150 psi		
30 in.Hg/300 psi		

BOURDON SYSTEM SELECTION

Ordering Code	Bourdon Tube & Tip Material[1] (all joints TIG welded)	Socket Material	Tube Type	Range Selection Limits (psi)	NPT Conn.
S	316 stainless steel	316 stainless steel	C-Tube	vac/1000 psi	¼

TO ORDER THIS 1084 POCKET TEST GAUGE:

Select:	30	1084	S	02L	0/1000#
1. Dial size–3˝					
2. Case type–1084					
3. Bourdon system selection ordering code					
4. Connection size–¼ (02)					
5. Connection location–Lower (L)					
6. Standard pressure range–1000 psi					

Consult factory for guidance in product selection
Phone (203) 378-8281 or visit our
web site at www.ashcroft.com

ASHCROFT®

Precision Digital Test Gauge
Types 2089, 2086 and 2084

- *Unmatched accuracy of ±.05% total error band*
  - *Temperature corrected from 0/150°F*
- *Breakthrough readability and portability*
  - *5 digit LCD display*
  - *Display height of .66˝*
- *Rugged portable design*
  - *Weatherproof NEMA IV, IP65 case*
  - *CE, FM, CSA*
  - *Stainless steel case-to-socket weld for strength*
  - *Stainless steel cover protects keypad*
- *Global/highly configurable*
  - *Nine options including 12 units of measure, 7 languages and password protected calibration and disable function*
- *Safety features include*
  - *Pressure range on keypad to reduce accidental overpressure*
  - *Proof pressure 2 x gauge range*
  - *Meets ASME B40.7*
- *% of reading bar graph*

LOOK FOR THESE AGENCY MARKS ON OUR PRODUCTS

PRODUCT SPECIFICATIONS

Type:	2089 (0.05% F.S. accuracy), 2086 (0.10% F.S. accuracy), 2084 (0.25% F.S. accuracy)
Accuracy:	0.05%, 0.10% or 0.25% all Full Scale, Terminal Point, Total Error Band (TEB) Including Hysteresis, Linearity, Repeatablilty and Temperature (0/150°F)
Case Size:	3˝
Case Material:	300 Series Stainless Steel
Case Finish:	Electropolished/Tumbled
Case Rating:	Weatherproof, IP65, NEMA 4
Wetted Parts:	316 Stainless Steel
Inlet Fittings:	¼ NPT Male, JIS, DIN, SAE, (others on application)
Connection:	Lower (6 o'clock), top, side
Ranges:	Vac. thru 7000 psi (see engineering units below for other units of measurement)
Units:	psi =**#** bar=**BR** kPa=**KP** mPa=**MP** inHg=**IM** inH_2O=**IW** mmH_2O=**MMW** cmH_2O=**CMW** millibar=**MB** kg/cm^2=**KSC**
Operating Temp.:	0/150°F (–18/65°C)
Storage Temp.:	–40/180°F (–40/82°C)
Temp. Corrected:	Yes
DISPLAY	
Type:	LCD
Display Digits:	5, 99999 display counts
Character Height:	.66˝
Backlite:	Off by default
Bar Graph:	Yes
Battery Life:	<1000 hrs. (3 AAA alkaline batteries)
Agency Approvals:	CE EN 50082-1 (1997), FM, CSA Note: FM/CSA approval not valid on vac. and 15# & vac. ranges
KEYPAD FUNCTIONS	
On/Off:	Manually turns unit on and off (auto off options in configuration menu
Backlite:	Manually turns backlite on and off (auto off options in configuration menu)
Min/Max:	Stores min. and max. values when displayed
Zero/Clear:	Zeros display or clears min. and max. values when displayed

Enter:	Selects items in configuration menu
Configuration Mode:	Allows scrolling through configuration menus to select available options
Engineering Units:	psi,˝Hg, ˝H_2O*, ftSW, Bar, mBar, kPa, mPa, mmHg, cmH_2O, mmH_2O, kg/cm^2 (*Allows choice of reference temperatures 4°C, 20°C or 60°F)
Update Rate:	Four Selections: 10x/sec, 5x/sec, 2x/sec, 1x/sec
Auto Off:	Five Options: Never, 2 min., 5 min., 15 min., 30 min.
Dampening:	Five Selections: None, average 2, 4, 6, 8 readings
Language:	Seven Languages: English, Spanish, French, Italian, German, Portuguese, Dutch
Backlite:	Five Selections: On/off, 10 sec., 30 sec., 1 min., 5 min.

Calibrate:	Zero and Span (password protected)
Contrast:	Seven available options
Disable:	Locks in current configuration settings.
Calibration Chart:	10 point individual calibration chart, standard for Type 3089, others optional (XC4)
Accessories:	300 Series SS Protective Cover, Protective Carrying Pouch
Optional Features:	Flange for Panel Mounting = **FF,** Metal Tag Wired to Case = **NH,** Paper Tag Wired to Case = **NN,** Protective Rubber Boot = **B1,** Certificate of Conformance = **C1,** Calibration Certificate (2084 & 2086 only. Standard w/2089) = **C4,** Weatherproof ABS Carrying Case = **S7,** Clean for Gaseous Oxygen Service = **6B,** Clean for Liquid Oxygen Service = **6D**

DIGITAL PRECISION TEST GAUGE RANGES:

psi Gauge	psi Compound	psi Absolute	bar/kb/cm^2 Gauge	bar Compound	mmH_2O Gauge	mPa Gauge	mBar/cmH_2O Gauge	kPa Gauge	Temp. Options
vac.	15 & vac.	15	1	–1 to 0	3000	1	250	25	4°C
5	30 & vac.	25	1.6	–1 to 1	5000	1.6	300	40	20°C
10	60 & vac.	50	2.5	–1 to 2	10,000	2.5	400	60	60°F
15	100 & vac.		4	–1 to 30		6	500	160	
30			6	–1 to 30		10	600	250	
60			10			40	1000	400	
100			16				1600	600	
160			25				2000	1000	
200			40				2500		
300			60				4000		
500			160				5000		
600			250				6000		
800			400				10,000		
1000			500						
2000									
2500									
3000									
5000									
700									

TO ORDER THIS DIGITAL TEST GAUGE:

Select:	Example:	30	2089	SD	02L	100#	B1, 6B
1. Dial Size: 3˝ = **30**							
2. Model: **2084, 2086, 2089**							
3. Case: 316 SS = **SD**							
4. Connections: ¼ NPT Male Lower = **02L**							
5. Range Value: (see range chart)							
Unit of Measurement: (see "Units" list)							
6. Options: (see "Optional Features" list)							

Consult factory for guidance in product selection
Phone (203) 378-8281 or visit our
web site at www.ashcroft.com

ASHCROFT®

Handheld LCD Digital Calibrator Type ATE-2 Pressure, Temperature, Voltage and Current Measurement

- ***Standard features on ATE-2 units now include Datalogging, USB interface, onboard 24VDC Loop Power Supply and IP65 Enclosure***
- ***Interchangeable pressure and temperature modules***
- ***Pressure measurement accuracies of ±0.025%, 0.05% and 0.10%, or .06/.07%***
- ***Pressure ranges from 0.25 in.H_2O to 10000 psi***
- ***Push-button zero adjust***
- ***Supports most standard RTD probes and thermocouples***
- ***Min/max, tare, programmable damping, percent function, trip detect, all standard***
- ***Optional Intrinsically Safe version available (no 24Vdc loop supply)***

The Ashcroft® ATE-2 is a next generation handheld calibrator with extensive data logging and communications capabilities. Onboard data logging can be transferred to a standard SD card or serial interface via the USB connection, thus offering the operator flexibility and convenience. Optional intrinsically safe version is suitable for use on gas, oil and in chemical processing environments. Interchangeable pressure and temperature modules mean that one base unit can be used in many applications. Existing pressure and temperature modules can be upgraded by the factory to work with the new base unit, saving the operator money.

BASE UNIT PHYSICAL SPECIFICATIONS

Dimensions
8.7 in. (L) x 5.1 in. (W) x 3.8 in. (H)

Weight
Max. 2.4 lbs. w/2 pressure modules installed

Case Material
High impact PC-ABS

Sensor Module Capacity
2 bays for Ashcroft AM2 sensor modules

Display
1.5˝ x 2.5˝ graphic LCD display with backlight. Flip-screen capability with bar-graph indication of % span. Can display 2 simultaneous modules in addition to one electronic reading (mA/V)

Electrical Connection
4mm banana jacks (one set of test leads provided with each ATE-2)

BASE UNIT OPERATING SPECIFICATIONS

Operating Temperature Range
Standard: –4 to 120°F

Storage Temperature
–4° to 158°F

Update Rate
100 ms with one pressure module installed. 200 ms with two pressure modules installed

Resolution
±0.0015% of span, 66,000 counts (max)

Warm-Up
5 minutes for rated accuracy

Damping
Programmable filtering, levels one through 16

Electrical Measurements
0-20 mA or 0-30 Vdc

Input (volts)	Accuracy
0/10 Vdc	±0.025% FS
0/30 Vdc	±0.10% FS
0/20mA	±0.03% FS

Enclosure
IP65/NEMA 4X (includes modules)

Temperature Effect; Electrical Measurement
±.001% of Span per °F over compensated range

Serial Interface
USB (Micro-B connector type)

Field Calibration
Both pressure modules and base unit electronics can be calibrated in the field via prompted keypad commands

Datalogging
- Internal storage up to 15,700 records that is transferrable to a removable SD card
- Manual and automatic datalogging capability
- Data interval programmable from 0.1 to 3600 sec

Agency Approvals (with modules)
CE Mark (EMI/RFI), FCC (CFR47) and UL 61010-1 are standard

Optional hazardous location version (for use with batteries only) includes:
FM Intrinsic Safety CL I, Div I, Gr A,B,C,D
CSA Intrinsic Safety CL I, Div I, Gr A,B,C,D
ATEX Ex ia ii c T4 Ga –20°C <Ta < +50°C

Power Requirements
(4) AA Batteries (provides up to 40 hours battery life with 2 modules installed) or
USB Universal AC Adapter (100-240 VAC, 50/60 Hz)

Certification
N.I.S.T. Traceable certification document provided for base display unit and sensor modules

PRESSURE SENSOR MODULE SPECIFICATIONS

AM2-1 Low Pressure Modules

Pressure Types
Gauge, differential & compound

Available Ranges
0-25 in. H_2O – 200 in. H_2O (See Chart)

Available Accuracies
±0.06% (0/1-0/200 in. H_2O), ±0.07% (0/0.25-0/.5 in. H_2O) or 0.1% of Span

Compensated Temperature Range
20°F to 120°F

Temperature Effect
±.004% of Span per °F over compensated range (from reference temperature range of 70° ±3°)

Repeatability
±0.01% of span (range 0/1 in. H_2O or higher)
±0.02% of span (ranges below 0/1 in. H_2O)

Sensitivity
±0.002% of span (typical)

Media Compatibility
Clean, dry, non-conductive, non-corrosive gas

Under/Overpressure Capability
–15 to 50 psi

Maximum Static (line) Pressure
100 psi

Process Connection
Standard: 1/8 NPT female

AM2-2 High Pressure Modules

Pressure Types
Gauge, absolute, compound & vacuum

Available Ranges
5 psi-10,000 psi (See Chart)

Available Accuracies
±0.025, 0.05 or 0.1 % of Span (0-10,000 psi range only available as psig and 0.1% accuracy)

Compensated Temperature Range
20°F to 120°F

Temperature Effect
Standard: ±.004% of Span per °F over the compensated range (from reference temperature range of 70° ±3°)
Optional: No additional error due to temperature over the compensated range

Repeatability
±0.01% of span

Sensitivity
±0.002% of span (typical)

Consult factory for guidance in product selection
Phone (203) 378-8281 or visit our
web site at www.ashcroft.com

MADE IN U.S.A.

ASHCROFT®

Handheld LCD Digital Calibrator Type ATE-2, Pressure, Temperature, Voltage and Current Measurement

AM2-2 High Pressure Modules (cont.)

Media Compatibility
0/5-0/10,000 psi ranges: Any medium compatible with 316 stainless steel isolation.
Optional: Cleaned for Oxygen Service

Overpressure Capability
200% for ranges up to 1000 psi
150% for ranges over 1000 psi

Process Connection
Standard: 1/8 NPT female
Optional: 1/8 NPT female with flush port
Welded VCR fitting with standard finish (ranges up to and including 5000 psi)

TEMPERATURE INTERFACE MODULES

AM2-RT Series (RTD)

AM2-RT1 and AM2-RT2 interface modules allow the ATE-2 to measure temperature with an RTD

AM2-RT1: Accommodates Pt100, Ni120, Cu120 and other common 2, 3 or 4 wire probes with resistance outputs of 400 ohms or less.
AM2-RT2: Accommodates Pt1000 and other common 2, 3 or 4 wire probes with resistance outputs of 4000 ohms or less.

Selectable Units of Measure
°C, °F, °K, °R and ohms

Input Receptacle
Accepts TA4F type RTD connector

Model ATE-2 with AM2 Modules

RTD Probes Available
Pt-100 probes, 6″ or 12″ length, with or without handle. DIN Class A accuracy. Includes mating TA4F connector. Consult factory for details and availability.

AM2-TC1 (Thermocouple)

The AM2-TC1 interface module allows the ATE-2 to measure temperature with a thermocouple

Compatibility
Programmed to provide direct temperature readout from types J, K, T, E, R, S, B & N thermocouples or direct millivolt readout from any thermocouple.

Reference Junction
Automatic internal or manual external

Resolution
Automatic or manually selectable, up to .01°

Units of Measure
Selectable; °C, °F, °K, °R and millivolts

Receptacle
Accepts "miniature thermocouple connector", Omega® type SMP

ACCESSORIES

Contoured protective case with shoulder strap
Hard carrying case

STANDARD RANGES

AM2-2 psi (gauge and absolute pressure)	AM2-1 in.H_2O (gauge/ differential pressure)	Other Engineering Units**
5	0.25*	psi
10	0.5*	in.H_2O
15	1.0*	in.Hg
20	2.0*	ftSW
25	3.0*	bar
30	5.0*	mbar
50	10*	kPa
60	15*	MPa
100	25*	mmHg
150	50*	cmH_2O
200	100*	mmH_2O
250	150*	kg/cm^2
300	200*	User Selectable
500		
600		
1000		
1500		
2000		
2500		
3000		
5000		
6000		
7500		
10,000†		
vacuum		
5		
10		
15		
compound		
±5	±0.125*	
±10	±0.25*	
±15	±0.5*	
–15/+30	±1.0*	
–15/+60	±1.5*	
	±2.5*	
	±5.0*	
	±7.5*	
	±12.5*	
	±25*	
	±50*	
	±75*	
	±100*	

**Note: Engineering units identified above are accessible through the unit select feature. However, readout will default to the primary unit of measure on start-up. Sensor modules scaled in primary units other than in. H_2O (AM2-1) or psi (AM2-2) are also available. Consult factory.

†psig only for this range.

* Non-isolated, for clean dry gas only

TO ORDER

Base Display Unit
1) Specify Model: ATE-2
2) Specify Version: Standard (ST) or Intrinsically Safe (IS) for hazardous locations (includes FM (IS), CSA (IS) and ATEX)

Sensor Modules
3) Type (AM2-1 or AM2-2)
4) Pressure Range and Unit of Measure (see range chart)
5) Pressure Type (see specifications)
6) Accuracy (see specifications)
7) Specify Options
   a) "zero temperature error over compensated range" (AM2-2 only)
   b) Optional fitting (see specifications)
   c) Clean for Oxygen Service (AM2-2 only)

Temperature Interface Module
8) Type (AM2-RT1, AM2-RT2 or AM2-TC1)
9) RTD Probe Type (when required.)

Accessories
10) Specify required accessories

Consult factory for guidance in product selection
Phone (203) 378-8281 or visit our web site at www.ashcroft.com

MADE IN U.S.A.

ASHCROFT®

LCD Digital Indicator, Type ST-2A Pressure, Temperature, Voltage and Current Measurement

Standard Features

- ***Dual display – simultaneous measurement and display of pressure, temperature, voltage or current in any combination***
- ***Accuracy ratings of ±0.1%, ±0.05% and ±0.025 of span (pressure)***
- ***Pressure ranges from 0.25 inches of water to 10,000 psi***
- ***Interchangeable pressure and temperature modules***
- ***Multiple engineering units – 12***
- ***High static DP measurement capability***
- ***Temperature measurement with most common RTDs and thermocouples***
- ***Programmable damping***
- ***Tare capability***
- ***Display hold***
- ***RS232 two way communications***
- ***Standard NIST traceable certificate of calibration***

Optional Features

- ***24 Vdc power supply***
- ***Data logging – Automatic, manual and delayed actuation***
- ***Relays – hi/lo programmable configurations – N/O and N/C***
- ***Battery power – 5 AA NiCads with built-in charger***

The ST-2A is the perfect bench companion product to the Ashcroft® ATE-100 field handheld calibrator. This bench top (or panel mounting) package shares the same pressure and temperature modules and interfaces with the same software package as the Ashcroft ATE-100. An intuitive, menu-driven user interface puts all of the ST-2A's power at the simple press of a key. It uses the AQS (Ashcroft Quick-Select™) modular sensor system to provide the ultimate in measurement flexibility.

PRODUCT SPECIFICATIONS

PHYSICAL SPECIFICATIONS

Dimensions
10.9 in. (L) x 6.74 in. (W) x 4.0 in. (H)

Panel Cutout
6.56 in. x 3.53 in.

Weight
Max. 4.08 lbs. w/2 pressure modules installed

Case Material
High impact ABS

Sensor Module Capacity
2 bays for Ashcroft AQS "Quick Select®" sensor modules

Display
2 line LCD, 0.37 in. height per line. Can display simultaneous readings from 2 modules.

Electrical Connection
Standard banana jacks

BASE UNIT OPERATING SPECIFICATIONS

Operating Temperature Range
32° to 120°F

Storage Temperature
–4° to 158°F

Update Rate
130 ms (nominal) with one sensor installed

Resolution
±0.002% of span, 60,000 counts (max)

Warm-Up
5 minutes for rated accuracy

Electrical Measurements
0-20 mA or 0-30 Vdc

Options
Datalogging with Hi-Lo Relay Feature – Datalogging manually or automatically stores up to 643 measured values for upload to PC. Includes upload utility software. Hi-Lo relay feature allows programming of setpoints for activation of alarms or control valves.
Backlit Display
Built-in NiCad Rechargeable Battery Pack
Built-in 24Vdc Loop Power Supply
Handle
Panel Mounting Brackets

Power Requirements
Standard: ac adapter provided for 110Vac/60 Hz
Available: ac adapter provided for 220Vac/50 Hz
ac adapter provided for 100Vac/60 Hz
Optional: Built-in rechargeable NiCad Battery Pack*
*(Life: 20 hours nominal without backlit LCD, 2 hours nominal with backlit LCD. Activating RS232 results in approximately 30% reduction in battery life.)

Certification
N.I.S.T. Traceable certification document provided for base display unit and sensor modules

PRESSURE SENSOR MODULE SPECIFICATIONS

AQS-1

Pressure Types
Gauge, differential & compound

Available Ranges
(See Chart)

Available Accuracies
±0.06 (0/1-0/200 in. H_2O), ±0.07 (0/0.25-0/0.5 in. H_2O) or 0.1% of Span

Compensated Temperature Range
20°F to 120°F

Temperature Effect
±.004% of Span per °F over compensated range (from reference temperature range of 70° ±3°)

Repeatability
±0.01% of span (range 0/1 in. H_2O or higher)
±0.02% of span (ranges below 0/1 in. H_2O)

Sensitivity
±0.002% of span (typical)

Media Compatibility
Clean, dry, non-conductive, non-corrosive gas

Under/Overpressure Capability
–15 to 50 psi

Maximum Static (line) Pressure
100 psi

Process Connection
Standard: 1/8 NPT female

AQS-2

Pressure Types
Gauge, absolute, compound and vacuum

Available Ranges
(See Chart)

Available Accuracies
±0.025, 0.05 or 0.1 % of Span (±0.025 & 0.05% not available on 0/10,000 psi range)

Compensated Temperature Range
20°F to 120°F

Temperature Effect
Standard: ±.004% of Span per °F over the compensated range (from reference temperature range of 70° ±3°)
Optional: No additional error due to temperature over the compensated range

Repeatability
±0.01% of span

Sensitivity
±0.002% of span (typical)

Media Compatibility
0/5 -0/10,000 psi ranges: Any medium compatible with 316 SS isolation.
Optional: Cleaned for Oxygen Service

Consult factory for guidance in product selection
Phone (203) 378-8281 or visit our
web site at www.ashcroft.com

MADE IN U.S.A.

ASHCROFT®

LCD Digital Indicator, Type ST-2A Pressure, Temperature, Voltage and Current Measurement

Overpressure Capability
200% for ranges up to 1000 psi
150% for ranges over 1000 psi

Process Connection
Standard: 1/8 NPT female
Optional: 1/8 NPT female with flush port Welded VCR fitting with standard finish (ranges up to and including 5000 psi).

TEMPERATURE INTERFACE MODULES

AQS-RT1 and AQS-RT2 interface modules allow the ST-2A to measure temperature with an RTD:

AQS-RT1: Accommodates Pt100, Ni120, Cu120 and other common 2, 3 or 4 wire probes with resistance outputs of 400 ohms or less.
AQS-RT2: Accommodates Pt1000 and other common 2, 3 or 4 wire probes with resistance outputs of 4000 ohms or less.

Selectable Units of Measure
°C, °F, °K, °R and ohms

Input Receptacle
Accepts TA4F type RTD connector

RTD Probes Available
Pt-100 probes, 6˝ or 12˝ length, with or without handle. DIN Class A accuracy. Includes mating TA4F connector. Consult factory for details and availability.

The AQS-TC1 interface module allows the ST-2A to measure temperature with a thermocouple:

AQS-TC1

Compatibility
Programmed to provide direct temperature readout from types J, K, T, E, R, S, B & N thermocouples or direct millivolt readout from any thermocouple.

Reference Junction
Automatic internal or manual external

Resolution
Automatic or manually selectable, up to .01°

Units of Measure
Selectable; °C, °F, °K, °R and millivolts

Receptacle
Accepts "miniature thermocouple connector", Omega® type SMP

ACCESSORIES

110Vac/60 Hz ac Adapter
220Vac/50 Hz ac Adapter

STANDARD RANGES

AQS-2 psi (gauge and absolute pressure)	AQS-1 in.H_2O (gauge/ differential pressure)	Other Engineering Units**
5		
10	0.25*	psi
15	0.5*	in.H_2O
30	1.0*	in.Hg
50	2.0*	ftSW
60	3.0*	bar
100	5.0*	mbar
150	10*	kPa
200	15*	MPa
250	25*	mmHg
300	50*	cmH_2O
500	100*	mmH_2O
600	150*	kg/cm^2
1000	200*	User Selectable
1500		
2000		
2500		
3000		
5000		
6000		
7500		
10,000		
vacuum		
5		
10		
15		
compound		
±5		
±10	±0.125*	
±15	±0.25*	
–15/+30	±0.5*	
–15/+60	±1.0*	
	±1.5*	
	±2.5*	
	±5.0*	
	±7.5*	
	±12.5*	
	±25*	
	±50*	
	±75*	
	±100*	

**Note: Engineering units identified above are accessible through the unit select feature. However, readout will default to the primary unit of measure on start-up. Sensor modules scaled in primary units other than in. H_2O (AQS-1) or psi (AQS-2) are also available. Consult factory.

* Non-isolated, for clean dry gas only

TO ORDER

Base Unit
1) Specify Model: ST-2A
2) Specify Power Requirements: 110, 220 or 100Vac
3) Specify Options: (Datalogging, Backlit Display, etc.)

Sensor Modules
4) Type (AQS-1 or AQS-2)
5) Pressure Range and Unit of Measure (see range chart)
6) Pressure Type (see specifications)
7) Accuracy (see specifications)
8) Specify Options
   a) "zero temperature error over compensated range" (AQS-2 only)
   b) Optional fitting (see specifications)
   c) Clean for Oxygen Service (AQS-2 only)

Temperature Interface Module
9) Type (AQS-RT1, AQS-RT2 or AQS-TC1)
10) RTD Probe Type (when required. Consult factory for probe P/N)

Accessories
11) Specify required accessories

ASHCROFT®

Deadweight Tester Type 1305D, Accuracy (±0.1% of reading)

- ***Accuracy: 0.1% of reading***
- ***Operating Pressure: 15 psi to 10,000 psi***
- ***Operating Media: 1305D: SAE 20 weight automotive or machine oil***

  1305DH: Phosphate-based or glycol fluids
- ***O-ring Material: 1305D: Buna-N (D series)***
- ***1305DH: Ethylene Propylene (DH Series)***
- ***Piston and Cylinder Material: Stainless steel***
- ***Weight Material: Non-magnetic die cast zinc***
- ***Reservoir Volume: Approximately 1.5 pints (0.7 liter)***
- ***Special "CD-5" Certification package available (see Price Sheet TE/PS-1)***

Ashcroft® Type 1305D deadweight testers provide an easy means of precisely generating pressure to an accuracy of 0.1% of reading. Ashcroft 1305D units are available for operating ranges up to 10,000 psi. They are ideal for use in calibrating, setting, testing and repairing pressure measurement and control devices. Each 1305D unit is traceable to the National Institute of Standards and Technology, assuring instrument accuracy.

These pressure systems are designed to be field portable. A single carrying case holds the pressure generation pump as well as all the necessary tools and accessories. A second box contains the weights used for pressure generation (10,000 psi units require two boxes of weights). Ashcroft deadweight testers qualify as primary standards for pressure calibration.

The pump is a two-stage hydraulic pressure generator. A built-in shuttle valve allows for rapid pressure increase at low pressures. The rate of increase per pump cycle can be reduced at higher pressures to minimize resistance. This is accomplished by simply repositioning the two-position shuttle valve. With the shuttle valve in the high-pressure position, increasing pressure even when near the 10,000 psi upper limit can be accomplished quickly and easily. Final, precise adjustment is accomplished through the use of an integral vernier-adjustment knob.

The 1305D is provided with two-piston cylinder assemblies. A low-pressure

piston for pressure ranges from 15 to 2000 psi and a high-pressure unit for pressures from 75 to 10,000 psi. The high-pressure piston has an area of 1/80th of a square inch while the low pressure piston has an area of 1/16th of a square inch. Weights are provided for pressure increments of 5, 10, 20, 25, 40, 50, 100, 200 and 500 psi (depending on piston in use). Ashcroft 1305D testers can be used anywhere within their operational range without any change in accuracy. The same weights are used with both piston and cylinder assemblies.

Ashcroft 1305 units are available for psi ranges. Each unit comes complete with a hand jack set (for removal of pointers on gauges being calibrated), spare O-rings and all tools, accessories and fittings required for normal use.

1305D STANDARD PRESSURE RANGES

	Piston Assembly Pressure Range		Piston Value		Number of Weights by Value					Net Weight	
psi Type	Low	High	Low	High	L-5 H-25	L-10 H-50	L-20 H-100	L-40 H-200	L-100 H-500	lb	kg
1305D-10	15/200	75/1000	5	25	1	3	2	3	-	60	27
1305D-20	15/400	75/2000	5	25	1	3	2	3	2	70	32
1305D-30	15/600	75/3000	5	25	1	3	2	3	4	85	39
1305D-50	15/1000	75/5000	5	25	1	3	2	3	8	105	48
1305D-100	15/2000	75/10,000	5	25	1	3	2	3	18	175	80

ASHCROFT®

Pressure Gauge Comparator
Type 1327D, Accuracy (±0.25%)
Type 1327CM, Accuracy (±0.1%)

- ***Operating Pressure: 0-10,000 psi (maximum) (0-60,000 kPa)***
- ***Operating Media:***
  Standard:
  SAE 20 weight automotive or machine oil
  Optional:
  Phosphate-based or glycol fluids
  Distilled water for oxygen service
- ***O-ring Material:***
  Standard: Buna N (D Series)
  Optional: Ethylene Propylene (DH Series)
- ***Reservoir Volume: Approximately 1.5 pints (0.7 liter)***

SPECIFICATIONS TYPE 1327DG

- ***Accuracy: ±0.25% F.S.***
- ***Gauge Type: Ashcroft 4½ inch Type 1082 gauges with temperature compensation***
- ***Special "CD-4" Certification package available (see Price Sheet TE/PS-1)***

SPECIFICATIONS TYPE 1327CM

- ***Accuracy: ±0.1% F.S.***
- ***Gauge Type: Ashcroft 6-inch Type A4A with temperature compensation***
- ***Temperature Compensation: –25°F to +125°F (will maintain ±0.1% F.S. accuracy)***

Ashcroft® Types 1327D and 1327CM are designed to be field-portable pressure generation and test systems. A single carrying case holds the pump used to generate pressure as well as the gauges selected as the test standard.

Both units include an Ashcroft two-stage hydraulic pressure pump. A built-in shuttle valve allows for rapid pressure increase at low pressures. The rate of increase per pump cycle can be reduced at higher pressures in order to minimize resistance. This is accomplished by simply repositioning the two-position shuttle valve. With the shuttle valve in the high-pressure position, increasing pressure even when near 10,000 psi can be accomplished quickly and easily. Final adjustment is accomplished through the use of an integral vernier-adjustment knob.

Type 1327CM

The Ashcroft Type 1327CM is a precision gauge comparator which is provided with 6-inch Ashcroft ±0.1% F.S. accuracy Type A4A gauges. The gauges provided include temperature compensation which maintains the ±0.1% F.S. accuracy over an operating range of –25°F to +125°F. Available ranges include 30, 100, 500, 1000, 5000 and 10,000 psi.

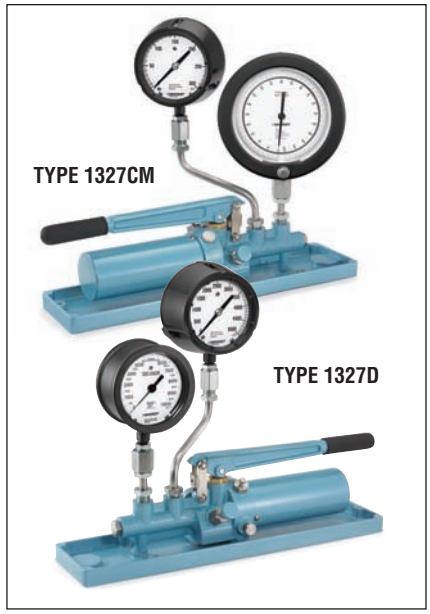

Type 1327D

The Ashcroft 1327D is available with between one and four Ashcroft gauges covering the operating range of 0 through 10,000 psi. Metric range models are also available.

The 1327DG is provided with 4½″ Ashcroft Type 1082 test gauges. These gauges provide an accuracy of ±0.25% F.S. The Ashcroft test gauges include temperature compensation and have a maximum thermal error of 0.005% F.S. per degree F.

Ashcroft Types 1327CM and 1327D are ideally suited for use as in-field pressure standards. Both come with temperature-compensated gauges, further enhancing their field worthiness. A single carrying case holds everything needed to take full advantage of the capabilities of the test set. psi and metric ranges are available for either system. Both systems are traceable to NIST with the 1327CM provided with calibration certificates for each gauge selected.

1327D STANDARD PRESSURE RANGES

Unit of Measure	Type	Gauge Range(s) Included				Net Weight	
						lb	kg
psig	1327DG-2	0/150	—	—	—	36	16
	1327DG-6	0/150	0/600	—	—	38	17
	1327DG-50	0/150	0/600	0/5000	—	40	18
	1327DG-100	0/150	0/600	0/5000	0/10000	42	19
kg/cm²	1327DMG-10	0/10	—	—	—	36	16
	1327DMG-40	0/10	0/40	—	—	38	17
	1327DMG-250	0/10	0/40	0/250	—	40	18
	1327DMG-600	0/10	0/40	0/250	0/600	42	19
bar	1327DBG-10	0/10	—	—	—	36	16
	1327DBG-40	0/10	0/40	—	—	38	17
	1327DBG-250	0/10	0/40	0/250	—	40	18
	1327DBG-600	0/10	0/40	0/250	0/600	42	19
kPa	1327DAG-1000	0/1000	—	—	—	36	16
	1327DAG-4000	0/1000	0/4000	—	—	38	17
	1327DAG-25000	0/1000	0/4000	0/25000	—	40	18
	1327DAG-60000	0/1000	0/4000	0/25000	0/60000	42	19

For hydraulic fluid service (phosphate base and glycols) specify 1327DH, DMGH, DBGH or DAGH.
For oxygen service (distilled water) specify 1327DGO, DMGO, DBGO or DAGO.

ASHCROFT®

Pressure Tester
Model PT, Dual Display
LCD Digital Pressure Indicator

STANDARD FEATURES

- ***Push-button zero adjust***
- ***Max/min memory***
- ***Selectable engineering units***
- ***Variable damping***
- ***Tare***
- ***Port select***
- ***Push-to-print***
- ***RS232 I/O***
- ***High static DP capability***

OPTIONAL FEATURES

- ***Backlit display***
- ***Rechargeable battery pack***

The Ashcroft® PT indicator is an extremely versatile pressure measurement and test instrument. It can simultaneously display the output of two pressure sensors, two RTD's or one of each. It offers 12 standard user selectable engineering units and one custom value. Other dedicated front panel buttons make it easy to set zero, check max/min values, adjust measurement damping, select either or both ports for standard display, additive or differential display, print the display and configure the RS232 output. All front panel features are accessible via the RS232 port for remote configuration or data acquisition.

PRODUCT SPECIFICATIONS

PHYSICAL SPECIFICATIONS

Dimensions
7.72 in. (L) x 6 in. (W) x 2.95 in. (H)

Panel Cutout
5.4 in. x 2.68 in.

Weight
Depending on configuration
Max. <4 lbs. w/2 sensors and battery pack

Case Material
High impact ABS

Sensor Capacity
2 bays for Ashcroft PPT sensors

Display
2 line LCD, 0.38 in. height per line. Can display simultaneous readings from 2 modules.

Options
Backlit Display
Built-in NiCad Rechargeable Battery Pack
Handle
Panel Mounting Brackets

OPERATING SPECIFICATIONS

Operating Temperature Range
32° to 120°F

Storage Temperature
–4° to 158°F

Update Rate
130 ms (nominal) with one sensor installed

Resolution
±0.002% of span, 60,000 counts (max)

Power Requirements
Standard: ac adapter provided for 110Vac/60 Hz
Available: ac adapter provided for 220Vac/50 Hz
ac adapter provided for 100Vac/60 Hz
Optional: Built-in rechargeable NiCad Battery Pack*

*(Life: 25 hours nominal without backlit LCD, 5 hours nominal with backlit LCD. Activating RS232 results in approximately 30% reduction in battery life.)

Certification
N.I.S.T. Traceable certification document provided for base display unit and sensor modules

PRESSURE SENSOR SPECIFICATIONS

PPT-1

Pressure Types
Gauge, differential and compound

Available Ranges
(See Chart)

Available Accuracies
±0.06 (0/1-0/200 in. H_2O), ±0.07 (0/0.25-0/0.5 in. H_2O) or 0.1% of Span

Compensated Temperature Range
20°F to 120°F

Temperature Effect
±.004% of Span per °F over compensated range (from reference temperature range of 70° ±3°)

Repeatability
±0.01% of span (range 0/1 in. H_2O or higher)
±0.02% of span (ranges below 0/1 in. H_2O)

Sensitivity
±0.002% of span (typical)

Media Compatibility
Clean, dry, non-conductive, non-corrosive gas

Under/Overpressure Capability
–15 to 50 psi

Maximum Static (line) Pressure
100 psi

Process Connection
Standard: 1/8 NPT female

PPT-2

Pressure Types
Gauge, absolute, compound and vacuum

Available Ranges
(See Chart)

Available Accuracies
±0.025, 0.05 or 0.1 % of Span (±0.025 & 0.05% not available on 0/10,000 psi range)

Compensated Temperature Range
20°F to 120°F

Temperature Effect
Standard: ±.004% of Span per °F over the compensated range (from reference temperature range of 70° ±3°)
Optional: No additional error due to temperature over the compensated range

Repeatability
±0.01% of span

Sensitivity
±0.002% of span (typical)

Media Compatibility
0/5-0/10,000 psi ranges: Any medium compatible with 316 SS isolation.
Optional: Cleaned for Oxygen Service

Overpressure Capability
200% for ranges up to 1000 psi
150% for ranges over 1000 psi

Process Connection
Standard: 1/8 NPT female
Optional: 1/8 NPT female with flush port
Welded VCR fitting with standard finish (for ranges up to and including 5000 psi)

Consult factory for guidance in product selection
Phone (203) 378-8281 or visit our
web site at www.ashcroft.com

MADE IN U.S.A.

ASHCROFT®

Pressure Tester
Model PT, Dual Display
LCD Digital Pressure Indicator

RTD INTERFACE ASSEMBLY

PPT-RT1: Accommodates Pt100, Ni120, Cu120 and other common 2, 3 or 4 wire probes with resistance outputs of 400 ohms or less.
PPT-RT2: Accommodates Pt1000 and other common 2, 3 or 4 wire probes with resistance outputs of 4000 ohms or less.

Input Receptacle
Accepts TA4F type RTD connector

RTD Probes Available
Pt-100 probes, 6˝ or 12˝ length, with or without handle. DIN Class A accuracy. Includes mating TA4F connector. Consult factory for details and availability.

Rear view of Model PT with 2 pressure sensors installed

STANDARD RANGES

PPT-2 psi (gauge and absolute pressure)	PPT-1 in.H_2O (gauge/ differential pressure)	Other Engineering Units**
5	0.25*	psi
10	0.5*	in.H_2O
15	1.0*	in.Hg
30	2.0*	ftSW
50	3.0*	bar
60	5.0*	mbar
100	10*	kPa
150	15*	MPa
200	25*	mmHg
250	50*	cmH_2O
300	100*	mmH_2O
500	150*	kg/cm^2
600	200*	User Selectable
1000		
1500		
2000		
2500		
3000		
5000		
6000		
7500		
10,000		
vacuum		
5		
10		
15		
compound		
±5	±0.125*	
±10	±0.25*	
±15	±0.5*	
–15/+30	±1.0*	
–15/+60	±1.5*	
	±2.5*	
	±5.0*	
	±7.5*	
	±12.5*	
	±25*	
	±50*	
	±75*	
	±100*	

**Note: Engineering units identified above are accessible through the unit select feature. However, readout will default to the primary unit of measure on start-up. Sensor modules scaled in primary units other than in. H_2O (PPT-1) or psi (PPT-2) are also available. Consult factory.

* Non-isolated, for clean dry gas only

TO ORDER

Base Display Unit
1) Specify Model: PT
2) Specify Power Requirements: 110, 220 or 100Vac
3) Specify Options: (Backlit, NiCad Battery Pack, Handle, Panel Mounting Brackets)

Sensors
(Base Display Unit can hold a total of 1 or 2 pressure sensors or RTD interface assemblies simultaneously. Sensors and interface assemblies will be installed into the base display unit at the factory.)

4) Type (PPT-1 or PPT-2)
5) Pressure Range and Unit of Measure (see range chart)
6) Pressure Type (see specifications)
7) Accuracy (see specifications)
8) Specify Options
   a) "zero temperature error over compensated range" (PPT-2 only)
   b) Optional fitting (see specifications)
   c) Clean for Oxygen Service (PPT-2 only)

RTD Interface Assembly
9) Type (PPT-RT1 or PPT-RT2)
10) Probe Type (when required. Consult factory for probe P/N)

ASHCROFT®

Volume Controller
Type AVC-1000 & 3000

Ashcroft® precision-pressure volume controllers provide a quick-and-easy method for precisely setting a pressure in a closed pneumatic system. They are ideal for use with Ashcroft test gauges for the calibration of other pressure-measurement and control devices.

The AVC unit consists of a volume chamber with an internal piston assembly. The piston seals across the diameter of the chamber. Once the AVC unit is connected to a pneumatic system, the volume of the chamber becomes part of the volume of the system. The pressure-adjust knob at the front of the unit repositions the piston within the chamber through interaction with a precision-machined lead screw. Piston movement within the chamber increases or decreases the volume of the system, depending on the direction of movement. In a closed system where gas cannot leak out upon compression or be drawn in upon expansion, this volume change results in a change in the internal pressure. Increasing the volume by moving the piston toward the front of the AVC unit will decrease the pressure. Conversely, decreasing the volume by moving the piston to-ward the rear of the unit will increase the pressure. The pressure change generated by a given amount of piston travel is proportional to the change in volume as compared to the total system volume.

AVC units are available for pressures up to 3000 psi. The AVC-1000 can be used to set pressures from vacuum through 1000 psi while the AVC-3000 can be used for pressures from vacuum through 3000 psi.

An integral balance valve provides a means for equalizing pressure on both sides of the piston prior to making the final adjustments when setting the pressure. This minimizes the resistance encountered when repositioning the piston and assures ease of pressure setting, even at 3000 psi. The balance valve also serves as a pressure-relief valve, assuring that the differential pressure across the piston does not reach unsafe levels.

AVC units can also be used without a compressed air source for the generation of moderate levels of positive pressure and vacuum. The high resolution of the AVC, combined with the ability to generate pressure and vacuum, make it an ideal tool for low-pressure (below 1 psi) calibration and test as well as higher pressure calibration and test activities.

GENERAL SPECIFICATIONS

Type	AVC-1000	AVC-3000
Range (psi)	vacuum-1000	vacuum-3000
Resolution (psi)	0.00025	0.0005
Volume Change (cubic inches)	3.5	2.5
Mechanical Rotation (turns)	31	61
Proof Pressure (psi)	3000	6000
Burst Pressure (psi)	6000 min	12,000 min
Operating Temperature Range	20-120°F	20-120°F
Operating Media	Clean, dry noncorrosive gas such as compressed air or nitrogen	
Construction	Aluminum body, stainless steel, brass Teflon, Delrin and Buna N	

Consult factory for guidance in product selection
Phone (203) 378-8281 or visit our
web site at www.ashcroft.com

PROCESS GAUGES

Product Selection Information 75
Type 1279 Duragauge® Pressure Gauge..... 76
Type 1377 Duragauge® Pressure Gauge..... 77
Type 1379 Duragauge® Pressure Gauge..... 78
Type 2462 Duragauge® Pressure Gauge..... 79
Type 1259 Process Pressure Gauge..... 80
Type 1279, 1379, 1377, 2462
Receiver Gauges 81
Range Tables 82-83

ASHCROFT®

Product Selection Information
Process Pressure Gauges
Consult ASME B40.100 for guidance in gauge selection

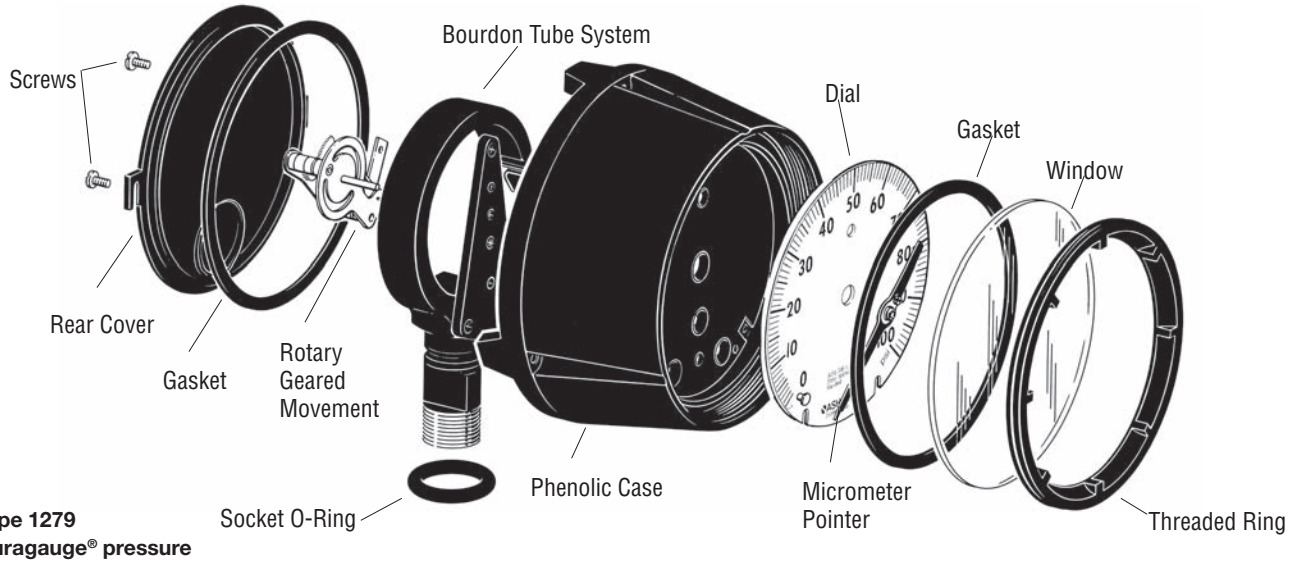

Type 1279 Duragauge® pressure gauge shown

WARNING: Pressure gauges should be selected considering media and ambient operating conditions to prevent misapplication. Improper application can be detrimental to the gauge, causing failure and possible personal injury or property damage. The information in this catalog is offered as a guide to assist in making the proper selection of a pressure gauge. For additional information contact the factory.

Pressure Ranges: Select a gauge with a full-scale pressure range of approximately twice the normal operating pressure. The maximum operating pressure should not exceed 75% of the full-scale range. Failure to select a gauge within these criteria may ultimately result in fatigue failure of the Bourdon tube.

Operating Conditions: The operating conditions to which a gauge will be subjected must be considered. If the gauge will be subjected to severe vibrations or pressure pulsation, liquid-filling the gauge or the ***PLUS!™*** option may be necessary to obtain normal product life. Other than discoloration of the dial and hardening of the gasketing that may occur as process temperatures exceed 150°F, non liquid-filled gauges with glass or acrylic windows, can withstand continous operating temperatures up to 250°F (121°C). Liquid-filled gauges can withstand 200°F (93°C) but glycerin fill and acrylic window will tend to yellow. Accuracy at temperatures above or below the reference ambient temperature of 68°F (20°C) will be affected by approximately .4% per 25°F (4°C). Gauges with welded joints will withstand 750°F (399°C) (450°F (232°C) with silver brazed joints) for short times without rupture, although other parts of the gauge will be destroyed and calibration will be lost. For continuous use and for process or ambient tempratures above 250°F (121°C), a diaphragm seal and or capillary or siphon is recommended. Proper selection of the Bourdon system material is dependent on the process fluid to which the system will be subjected. If the correct material is not available, the use of a diaphragm seal may be necessary to protect the system from the process fluid. Liquid-filled gauges are recommended for the discharge side of positive displacement pumps.

Cases: Various styles and materials are offered. All Duragauge and Type 1259 gauges are offered standard with solid front cases. Solid front cases have a solid wall between the Bourdon tube and the window.

Rings: The ring, which retains the window, is threaded, bayonet (cam), or hinged, depending upon case type.

Pressure Elements: Available in a wide variety of materials, including: brass, phosphor bronze, alloy steel, 316 stainless steel, Monel and Inconel. Proper selection of the Bourdon system material depends upon the process fluid to which the system will be subjected. If the correct material is not available, the use of a diaphragm seal is recommended to protect the system from the process fluid. If the gauge is subject to severe vibration or pressure pulsation, a liquid-filled gauge or Duragauge® ***PLUS!™*** is recommended.

Duragauge® *PLUS!™* Pressure Gauge: An exclusive, optional feature provides virtually liquid-filled performance in a dry gauge. The ***PLUS!™*** Performance feature is a patented design incorporated into the industry-standard Ashcroft pressure gauge. ***PLUS!™*** is available in any Duragauge® gauge case style material or range. Historically, pulsation and vibration have reduced gauge life and made gauges difficult to read. Customers have had no alternative to liquid-filled gauges to solve vibration and pulsation problems, until now!

Movements: Movements are designed and materials of construction selected to reduce friction and extend wear life. The stainless steel movement of the Duragauge® gauge is a rotary-geared design with Teflon-coated wear parts.

Dials: Dials are uniformly graduated and have highly legible black markings. Standard dials have a white epoxy coated aluminum background. Custom dials are available.

Windows: The standard is glass (dry gauge) or acrylic (liquid-filled gauge). Options are laminated safety glass, nonglare glass or acrylic.

Pointers: Ashcroft process gauges have micrometer adjustable pointers which can be repositioned without removal.

ASHCROFT®

Duragauge® Pressure Gauge
Type 1279, ASME B 40.100
Grade 2A (±0.5% of span)

- *4½˝ full-size Bourdon tube*
- *Patented Duratube™ with as-welded-tube construction controls stress for longer life*
- *"Round Cap Tip" construction lowers stresses for longer life*
- *Easily adjustable, self-locking micrometer pointer*
- *Burn-resistant phenol turret case*
- *Exclusive Teflon coated 400 series stainless steel rotary movement for longer life*
- ***PLUS!™** Performance Option:*
  - *Liquid-filled performance in a dry gauge*
  - *Minimizes wear from vibration and pulsations without liquid-filled headaches*
  - *See pages 6-7 for details*
  - *Order as option XLL*
- *Liquid filled case option (Code L)*
- *Epoxy-coated system for superior corrosion resistance*

Type 1279 Duragauge® pressure gauge is offered in 4½˝ phenolic case for superior chemical and heat resistance. Solid-front case design with blow-out back for safety. Dry, liquid-filled, hermetically sealed, weatherproof or ***PLUS!™*** options available. Field convertible to liquid-fill with conversion kit (detailed on page 247). All case styles provide full temperature compensation.

BOURDON SYSTEM SELECTION

Ordering Code	Bourdon Tube & Tip Material(1) (all joints TIG welded except "A")	Socket Material	Tube Type	Range Selection Limits (psi)	NPT Conn.(2)
A	Phosphor Bronze Tube-Brass Tip, Silver Brazed	Brass	C-Tube	12/1000	¼, ½
R	316L stainless steel	1019 steel	C-Tube	12/1500	¼,½
			Helical	2000/20,000	¼,½
S(4)	316L stainless steel	316L stainless steel	C-Tube	12/1500	¼,½
			Helical	2000/20,000	¼,½
P	K Monel	Monel 400	C-Tube	15/1500	¼,½
			Helical	2000/30,000	¼,½(3)

(1) For selection of the correct Bourdon system material, see the media application table on page 271.
(2) Other connections available on application.
(3) 30,000 psi range supplied with ¼ high pressure connection, ½ NPT optional.
(4) See Ashcroft product information page ASH/PI-60C for NACE compliance.

STANDARD RANGES

Pressure psi	Compound psi
0/15	30 in.Hg/15 psi
0/30	30 in.Hg/30 psi
0/60	30 in.Hg/60 psi
0/100	30 in.Hg/100 psi
0/160	30 in.Hg/150 psi
0/200	30 in.Hg/300 psi
0/300	
0/400	**Vacuum**
0/600	30/0 in.Hg
0/800	34/0 ftH₂O
0/1000	
0/1500	
0/2000	
0/3000	
0/5000	**NOTE:**
0/10,000	**Equivalent standard kg/cm², and kPa metric ranges are available.**
0/20,000	
0/30,000	

See pages 82 and 83 for additional ranges.

TO ORDER THIS 1279 DURAGAUGE:

Select: 45 — 1279 — SS* — 04L — XXX — 2000#

1. Dial size–4½˝
2. Case type–1279
   Ring–threaded reinforced polypropylene
3. Bourdon system selection ordering code
4. Connection–¼ NPT (02), ½ NPT (04), Lower (L), Back (B)
5. Optional features–see page 267-268 (See pages 82 and 83 for additional ranges)
6. Standard pressure range
7. Accessories–see pages 261-266

(*) "S" denotes solid front case design

Consult factory for guidance in product selection
Phone (203) 378-8281 or visit our
web site at www.ashcroft.com

ASHCROFT®

Duragauge® Pressure Gauge
Type 1377, ASME B 40.100
Grade 2A (±0.5% of span)

- *4½″ full-size Bourdon tube*
- *Patented Duratube™ with as-welded-tube construction controls stress for longer life*
- *"Round Cap Tip" construction lowers stresses for longer life*
- *Easily adjustable, self-locking micrometer pointer*
- *Exclusive Teflon coated 400 series stainless steel rotary movement for longer life*
- *PLUS!™ Performance Option:*
  - *Liquid-filled performance in a dry gauge*
  - *Minimizes wear from vibration and pulsations without liquid-filled headaches*
  - *Order as option XLL*
- *Epoxy-coated system for superior corrosion resistance*

Type 1377 Duragauge® pressure gauge is offered in 4½″, 6″ and 8½″ dial sizes.

Designed for flush mounting, this solid-front gauge is ideal for panel board applications. Its black epoxy coating and its tough aluminum weatherproof case easily allow application in a variety of climatic conditions.

BOURDON SYSTEM SELECTION

Ordering Code	Bourdon Tube & Tip Material(1) (all joints TIG welded except "A")	Socket Material	Tube Type	Range Selection Limits (psi)	NPT Conn.(2)
A	Phosphor Bronze Tube-Brass Tip, Silver Brazed	Brass	C-Tube	12/1000	¼, ½
R(4)	316L stainless steel	1018 steel	C-Tube	12/1500	¼, ½
			Helical	2000/20,000	¼, ½
S	316L stainless steel	316 stainless steel	C-Tube	12/1500	¼, ½
			Helical	2000/20,000	¼, ½
P(3)	K Monel	Monel 400	C-Tube	15/1500	¼, ½
			Helical	2000/30,000	¼, ½(5)

(1) For selection of the correct Bourdon system material, see the media application table on page 271.
(2) Other connections available on application.
(3) See Ashcroft product information page ASH/PI-60C for compliance to NACE.
(4) "R" Bourdon system not available in 8½″ dial size.
(5) 30,000 psi range supplied with ¼ high pressure connection, ½ NPT optional.

STANDARD RANGES

Pressure psi	Compound psi
0/15	30 in.Hg/15 psi
0/30	30 in.Hg/30 psi
0/60	30 in.Hg/60 psi
0/100	30 in.Hg/100 psi
0/160	30 in.Hg/150 psi
0/200	30 in.Hg/300 psi
0/300	
0/400	**Vacuum**
0/600	30/0 in.Hg
0/800	34/0 ftH$_2$O
0/1000	
0/1500	
0/2000	
0/3000	
0/5000	**NOTE:**
0/10,000	**Equivalent standard kg/cm², and kPa metric ranges are available.**
0/20,000	
0/30,000	

See pages 82 and 83 for additional ranges.

TO ORDER THIS 1377 DURAGAUGE:

Select: 45 1377 AS* 04B XXX 2000#

1. Dial size–4½″
2. Case type–1377
   Ring–steel, black enamel finish
3. Bourdon system selection ordering code
4. Connection–¼ NPT (02), ½ NPT (04), Lower (L), Back (B)
5. Optional features–see page 267-268 (See pages 82 and 83 for additional ranges)
6. Standard pressure range
7. Accessories–see pages 261-266

(*) "S" denotes solid front case design

Consult factory for guidance in product selection
Phone (203) 378-8281 or visit our
web site at www.ashcroft.com

ASHCROFT®

Duragauge® Pressure Gauge
Type 1379, ASME B 40.100
Grade 2A (±0.5% of span)

- *4½″ full-size Bourdon tube*
- *Patented Duratube™ with as-welded-tube construction controls stress for longer life*
- *"Round Cap Tip" construction lowers stresses for longer life*
- *Easily adjustable, self-locking micrometer pointer*
- *Exclusive Teflon coated 400 series stainless steel rotary movement for longer life*
- *PLUS!™ Performance Option:*
  - *Liquid-filled performance in a dry gauge*
  - *Minimizes wear from vibration and pulsations without liquid-filled headaches*
  - *Order as option XLL*
- *Liquid filled case option (Code L)*
- *Epoxy-coated system for superior corrosion resistance*

Type 1379 Duragauge® pressure gauge is offered in 4½″, 6″ and 8½″ dials sizes.

This rugged, solid-front aluminum case gauge is tops in its field. It is available as a weatherproof hermetically sealed or liquid-filled version in 4½″ and 6″ sizes in pressures to 30,000 psi. Like the 1279, it can be easily field converted from the weatherproof version to either the sealed or liquid-filled version using an optional kit. Ranges 50,000, 80,000 and 100,000 psi are available in 6″ hermetically sealed and liquid-filled cases. All size cases are coated with black epoxy which will withstand most environmental conditions.

BOURDON SYSTEM SELECTION

Ordering Code	Bourdon Tube & Tip Material(1) (all joints TIG welded except "A")	Socket Material	Tube Type	Range Selection Limits (psi)	NPT Conn.(2)
A	Phosphor Bronze Tube-Brass Tip, Silver Brazed	Brass	C-Tube	12/1000	¼, ½
R	316L stainless steel(6)	1019 steel	C-Tube	12/1500	¼, ½
			Helical	2000/20,000	¼, ½
S	316L stainless steel(7)	316 stainless steel	C-Tube	12/1500	¼, ½
			Helical	2000/20,000	¼, ½
P	K Monel	Monel 400	C-Tube	15/1500	¼, ½
			Helical	2000/30,000	¼, ½(4)
WW	Inconel 718	316 stainless steel	Helical	50/80/100,000(3)(5)	¼ high press.

(1) For selection of the correct Bourdon system material, see the media application table on page 271.
(2) Other connections available on application.
(3) 50,000-100,000 psi available in 6″ 1379 lower and back connection only.
(4) 30,000 psi offered with ¼ high pressure connection, ½ NPT optional.
(5) Offered hermetically sealed as standard. Liquid fillable optional.
(6) See Ashcroft product information page ASH/PI-60C for NACE compliance.
(7) See Ashcroft product information page ASH/PI-60C for NACE compliance.

STANDARD RANGES

Pressure psi	Compound psi
0/15	30 in.Hg/15 psi
0/30	30 in.Hg/30 psi
0/60	30 in.Hg/60 psi
0/100	30 in.Hg/100 psi
0/160	30 in.Hg/150 psi
0/200	30 in.Hg/300 psi
0/300	
0/400	**Vacuum**
0/600	30/0 in.Hg
0/800	34/0 ftH$_2$O
0/1000	
0/1500	
0/2000	
0/3000	
0/5000	
0/10,000	
0/20,000	
0/30,000	
0/50,000	
0/80,000	
0/100,000	

NOTE:
Equivalent standard kg/cm², and kPa metric ranges are available.

See pages 82 and 83 for additional ranges.

TO ORDER THIS 1379 DURAGAUGE:

Select:	45	1379	SS*	04L	XXX	100#

1. Dial size–4½″, 6″, or 8½″
2. Case type–1379
   Ring–threaded reinforced polypropylene
3. Bourdon system selection ordering code
4. Connection–¼ NPT (02), ½ NPT (04), Lower (L), Back (B)
5. Optional features–see page 267-268 (See pages 82 and 83 for additional ranges)
6. Standard pressure range
7. Accessories–see pages 261-266

(★) "S" denotes solid front case design

Consult factory for guidance in product selection
Phone (203) 378-8281 or visit our
web site at www.ashcroft.com

ASHCROFT®

Duragauge® Pressure Gauge
Type 2462, ASME B 40.100
Grade 2A (±0.5% of span)

- *4½˝ full-size Bourdon tube*
- *Patented Duratube™ with as-welded-tube construction controls stress for longer life*
- *"Round Cap Tip" construction lowers stresses for longer life*
- *Easily adjustable, self-locking micrometer pointer*
- *Exclusive Teflon coated 400 series stainless steel rotary movement for longer life*
- ***PLUS!™** Performance Option:*
  - *Liquid-filled performance in a dry gauge*
  - *Minimizes wear from vibration and pulsations without liquid-filled headaches*
  - *Order as option XLL*
- *Epoxy-coated system for superior corrosion resistance*

This solid-front gauge is designed for greater readability by using a large 6˝ dial and a durable 4½˝ system. Viewed from the front, it appears to be a 6˝ gauge. Its glass-filled polypropylene case is highly impact resistant and holds up well in most environments. This general-purpose gauge offers truly functional styling and economy. The result is a gauge that will fit most applications at a price that represents outstanding value.

BOURDON SYSTEM SELECTION

Ordering Code	Bourdon Tube & Tip Material[1] (all joints TIG welded except "A")	Socket Material	Tube Type	Range Selection Limits (psi)	NPT Conn.[2]
A	Phosphor Bronze Tube-Brass Tip, Silver Brazed	Brass	C-Tube	12/1000	¼, ½
R	316L stainless steel	1018 steel	C-Tube	12/1500	¼, ½
			Helical	2000/20,000	¼, ½
S	316L stainless steel[4]	316 stainless steel	C-Tube	12/1500	¼, ½
			Helical	2000/20,000	¼, ½
P	K Monel	Monel 400	C-Tube	15/1500	¼, ½
			Helical	2000/30,000	¼, ½[3]

(1) For selection of the correct Bourdon system material, see the media application table on page 271.
(2) Other connections available on application.
(3) 30,000 psi range supplied with ¼ high pressure connection, ½ NPT optional.
(4) See Ashcroft product information page ASH/PI-60C for NACE compliance.

STANDARD RANGES

Pressure psi	Compound psi
0/15	30 in.Hg/15 psi
0/30	30 in.Hg/30 psi
0/60	30 in.Hg/60 psi
0/100	30 in.Hg/100 psi
0/160	30 in.Hg/150 psi
0/200	30 in.Hg/300 psi
0/300	
0/400	**Vacuum**
0/600	30/0 in.Hg
0/800	34/0 ftH₂O
0/1000	
0/1500	
0/2000	
0/3000	
0/5000	**NOTE:**
0/10,000	**Equivalent standard kg/cm², and kPa metric ranges are available.**
0/20,000	
0/30,000	

See pages 82 and 83 for additional ranges.

TO ORDER THIS 2462 DURAGAUGE:

Select: 45 2462 RS* 04L XXX 1000#

1. Dial size–4½˝
2. Case type–2462
   Ring–threaded reinforced polypropylene
3. Bourdon system selection ordering code
4. Connection–¼ NPT (02), ½ NPT (04), Lower (L), Back (B)
5. Optional features–see page 267-268 (See pages 82 and 83 for additional ranges)
6. Standard pressure range
7. Accessories–see pages 261-266

(*) "S" denotes solid front case design

Consult factory for guidance in product selection
Phone (203) 378-8281 or visit our
web site at www.ashcroft.com

ASHCROFT®

Process Pressure Gauge
Type 1259, ASME B 40.100
Grade 2A (±0.5% of span)

- ***Solid front safety case***
- ***Accuracy complies with ASME B 40.100 Grade 2A (±0.5% of span)***
- ***As-welded Bourdon Tube for safety and longer life***
- ***Easily adjustable, self-locking micrometer pointer***
- ***Adjustable movement***
- ***Ranges: vac to 20,000 psi***
- ***Date coded socket to ensure pedigree***
- ***Wetted part material printed on dial***
- ***Liquid filled case option (Code L)***

The Type 1259 process gauge is offered with an as-welded Bourdon tube to ensure safety and a longer life than competitive gauges. Meeting ASME B40.100, the Type 1259 process gauge has been engineered to meet marketplace requirements.

BOURDON SYSTEM SELECTION

Ordering Code	Bourdon Tube & Tip Material[1] (all joints TIG welded except "A")	Socket Material	Tube Type	Range Selection Limits (psi)	NPT Conn.[2]
S	316L stainless steel	316 stainless steel	C-Tube	12/1500	¼, ½
			Helical	2000/20,000	¼, ½
P	Monel	Monel	C-Tube	12/1000	¼, ½
			Helical	1500/20,000	¼, ½

(1) For selection of the correct Bourdon system material, see the media application table on page 271.
(2) Other connections available on application.
(3) See Ashcroft product information page ASH/PI-60C for compliance to NACE.

STANDARD RANGES

Pressure psi	Compound psi
0/15	30 in.Hg/15 psi
0/30	30 in.Hg/30 psi
0/60	30 in.Hg/60 psi
0/100	30 in.Hg/100 psi
0/160	30 in.Hg/150 psi
0/200	30 in.Hg/300 psi
0/300	
0/400	**Vacuum**
0/600	30/0 in.Hg
0/800	34/0 ftH_2O
0/1000	
0/1500	
0/2000	
0/3000	**NOTE:**
0/5000	**Equivalent standard kg/cm², and kPa metric ranges are available.**
0/10,000	
0/20,000	

TO ORDER THIS 1259 PROCESS GAUGE:

Select: **45** **1259** **SD** **04L** **XXX** **1000#**

1. Dial size–4½″
2. Case type–1259
   Ring–threaded reinforced polypropylene
3. Bourdon system selection ordering code
4. Connection–¼ NPT (02), ½ NPT (04), Lower (L)
5. Optional features–see page 267-268
6. Standard pressure range
7. Accessories–see pages 261-266

Consult factory for guidance in product selection
Phone (203) 378-8281 or visit our
web site at www.ashcroft.com

ASHCROFT®

Receiver Gauge Types 1279, 1379, 1377 & 2462, ASME B 40.100 Grade 2A (±0.5% of span)

- ***4½˝ full-size Bourdon tube***
- ***Patented Duratube™ with as-welded-tube construction controls stress for longer life***
- ***"Round Cap Tip" construction lowers stresses for longer life***
- ***Easily adjustable, self-locking micrometer pointer***
- ***Exclusive Teflon coated 400 series stainless steel rotary movement for longer life***
- ***Epoxy-coated system for superior corrosion resistance***

Ashcroft® receiver gauges are used in conjuction with pneumatic transmitters to indicate pressure, temperature, flow or other process parameters that can be transmitted by proportional variations in air pressure.

Available in standard transmitter-output air pressure ranges of 3-15 and 3-27 psi.

Type 1279

GAUGE TYPE NUMBER	DIAL SIZES	CASE/RING MATERIAL	SYSTEM ASSEMBLY	RANGE psi	POINTER	MOVEMENT	NPT CONN.	ACCURACY
1279AS-XPR	4½	**Case** Phenolic, black **Ring** Polypropylene, threaded, black	Phosphor bronze Bourdon tube, brass socket; (316 stainless steel optional)	3-15 and 3-27	Black, micrometer adjustable	Rotary geared, stainless steel, Teflon® coated pinion gear and segment shaft	½ (¼ Opt)	ASME B 40.1 Grade 2A (±0.5% of span)
1377AS-XPR	4½, 6, 8½	**Case** Aluminum, black epoxy **Ring** Hinged, steel, black						
1379AS-XPR	4½, 6, 8½	**Case** Aluminum, black epoxy **Ring** Threaded polypropylene 4½, 6 Hinged, steel, black 8½						
2462AS-XPR	6	**Case** Polypropylene, black **Ring** Polypropylene, bayonet lock, black						

GAUGE TYPE NUMBER	DIAL SIZES	CONNECTION LOCATION	MOUNTING TYPE	MOUNTING METHOD	MOUNTING METHOD CODE
1279AS-XPR	4½	Lower/Back	Stem/Surface	—	—
		Back	Flush	1278M Ring	—
1377AS-XPR	4½, 6, 8½	Back	Flush	—	—
		Lower/Back	Stem/Surface	—	—
1379AS-XPR	4½, 6, 8½	Back	Flush	4½ & 6, 1278M Ring – 8½, Wide Ring std.	—
		Lower/Back	Stem	—	—
2462AS-XPR	6	Lower/Back	Surface	Surface mounting ring	XBF
		Back	Flush	Flush mounting bracket	XBQ

TO ORDER THESE TYPES 1279/1379/1377/2462 RECEIVER GAUGES:

Select: **45** **1279** **AS** **04** **L** **XPR** **3-15 psi**

1. Dial size
2. Case type
3. Tube & socket material
4. Connection size, ¼ (02), or ½ (04)
5. Connection location, (L–Lower), (B–Back)
6. Optional features (XPR always appears in code for receiver gauge)
7. Range of transmitted signal (also specify the scale to be shown on the dial face)

Consult factory for guidance in product selection
Phone (203) 378-8281 or visit our
web site at www.ashcroft.com

MADE IN U.S.A.

ASHCROFT®

Range Tables
Duragauge® Pressure Gauge

STANDARD RANGES

Pressure – psi

Range	Figure interval	Minor graduation
0/15	1	0.1
0/30	5	0.2
0/60	5	0.5
0/100	10	1
0/160	20	2
0/200	20	2
0/300	50	2
0/400	50	5
0/600	50	5
0/800	100	10
0/1000	100	10
0/1500	200	20
0/2000	200	20
0/3000	500	20
0/5000	500	50
0/6000	500	50
0/10,000	1000	100
0/20,000	2000	200
0/30,000	5000	200
0/50,000	5000	500
0/80,000	10,000	1000
0/100,000	10,000	1000

Compound

Range	Figure interval		Minor graduation	
	in Hg	psi	in Hg	psi
30˝Hg/15 psi	5	3	0.5	0.2
30˝Hg/30 psi	10	5	1	0.5
30˝Hg/60 psi	10	10	1	1
30˝Hg/100 psi	10	10	2	1
30˝Hg/150 psi	10	20	5	2
30˝Hg/200 psi	30	20	5	2
30˝Hg/300 psi	30	50	5	2
30˝Hg/400 psi	30	50	5	5
30˝Hg/500 psi	30	50	5	5
30˝Hg/600 psi	30	50	10	5

Combination

Range		Figure interval		Minor graduation	
inner–psi	outer–ft H_2O	psi	ft H_2O	psi	ft H_2O
0/15	0/34	3	5	0.5	0.5
0/30	0/70	5	10	0.5	1
0/60	0/140	5	20	0.5	5
0/100	0/230	10	20	1	2
0/160	0/370	20	50	2	5
0/200	0/460	20	50	5	5
0/300	0/690	25	100	5	10

Vacuum

Range	Figure interval	Minor graduation
30/0 in. Hg 34/0 ft H_2O	5 in 5 ft	0.2 in 0.5 ft

Retard

Range	Figure interval	Minor graduation
0/15 psi retard to 30 psi	1 psi-30 psi	0.25 psi-5 psi
0/30 psi retard to 60 psi	2 psi-60 psi	0.2 psi-10 psi
0/60 psi retard to 100 psi	2 psi-100 psi	0.5 psi-10 psi
30˝Hg vac/75 psi retard to 150 psi	5˝Hg/15 psi-150 psi	1˝Hg/1 psi-5psi
10˝Hg vac/5 psi retard to 30˝Hg vac retard to 30 psi	2˝Hg/1 psi 30˝Hg 30 psi	0.2˝Hg/0.1 psi 5˝Hg 5 psi

METRIC RANGES

Pressure –kg/cm² and bar

Range	Figure interval	Minor graduation	Outer scale in psi
0/1	0.1	0.01	0/14
0/1.6	0.2	0.02	0/22
0/2.5	0.5	0.02	0/35
0/4	0.5	0.05	0/55
0/6	0.5	0.05	0/85
0/10	1	0.1	0/140
0/16	2	0.2	0/220
0/25	5	0.2	0/350
0/40	5	0.5	0/550
0/60	5	0.5	0/850
0/100	10	1	0/1400
0/160	20	2	0/2200
0/250	50	2	0/3500
0/400	50	5	0/5500
0/600	50	5	0/8500
0/1000	100	10	0/14,000
0/1600	200	20	0/22,000
0/2500	500	20	0/35,000
0/4000	500	50	0/55,000
0/6000	1000	50	0/85,000

Compound – kg/cm² and bar

Range	Figure interval	Minor graduation	Outer scale in psi
–1/0/1.5	0.2	0.02	30˝Hg/20
–1/0/3	0.5	0.05	30˝Hg/40
–1/0/5	0.5	0.05	30˝Hg/70
–1/0/9	1	0.01	30˝Hg/125
–1/0/15	2	0.02	30˝Hg/215
–1/0/24	5	0.02	30˝Hg/340

Vacuum – kg/cm² and bar

Range	Figure interval	Minor graduation	Outer scale
–1/0	0.1	0.01	30˝Hg

Graduations and figure intervals

All Ashcroft® dials have various total graduation marks, figure intervals and minor graduations. Standard dual scale metric ranges have a dominant metric inner scale. The outer scale is specified in psi. Some examples are shown. Duragauge gauges are made in accordance with ASME B40.1 entitled, “Gauges, Pressure, Indicating Dial Type – Elastic Element,” Accuracy grade 2A (±0.5% of span).

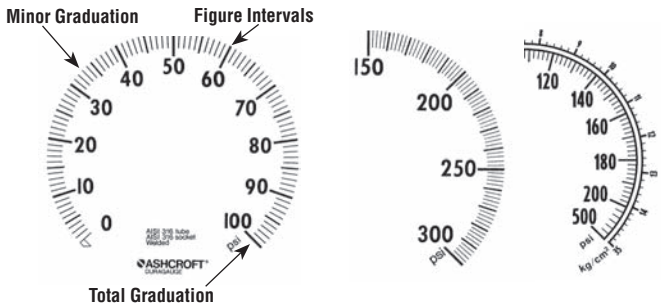

ASHCROFT®

Range Tables
Duragauge® Pressure Gauge

METRIC RANGES

Pressure – (kPa) kilopascal			
Range	**Figure interval**	**Minor graduation**	**Outer scale in psi**
0/100	10	1	0/14
0/160	20	2	0/22
0/250	50	2	0/35
0/400	50	5	0/55
0/600	50	5	0/85
0/1000	100	10	0/140
0/1600	200	20	0/220
0/2500	500	20	0/350
0/4000	500	50	0/550
0/6000	500	50	0/850
0/10,000	1000	100	0/1400
0/16,000	2000	200	0/2200
0/25,000	5000	200	0/3500
0/40,000	5000	500	0/5500
0/60,000	5000	500	0/8500
0/100,000	10,000	1000	0/14,000
0/160,000	20,000	2000	0/22,000
0/250,000	50,000	2000	0/35,000*
0/400,000	50,000	5000	0/55,000*

Compound – (kPa) kilopascal			
Range	**Figure interval**	**Minor graduation**	**Outer scale in psi**
–100/0/150	50	5	30˝Hg/20
–100/0/300	50	5	30˝Hg/40
–100/0/500	50	10	30˝Hg/70
–100/0/900	100	10	30˝Hg/125
–100/0/1500	200	20	30˝Hg/215
–100/0/2400	500	20	30˝Hg/340

Vacuum – (kPa) kilopascal			
Range	**Figure interval**	**Minor graduation**	**Outer scale**
–100/0	10	1	30˝Hg

The accuracy of a retard range gauge applies only to the expanded portion of the scale. The error in the compressed portion is –10% to +20% of the span. Maximum pressure at which a gauge is continually operated should not exceed 75% of full scale range. Consult inside sales in Stratford, CT for non-standard dials.

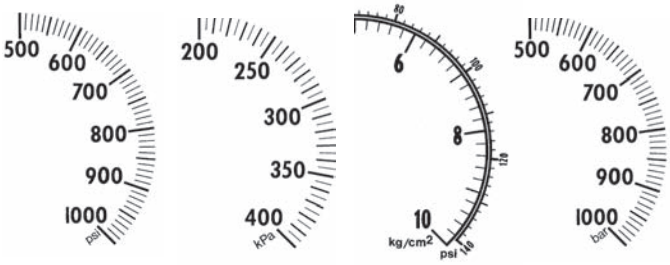

RECEIVER GAUGE

These ranges apply to any unit of pressure, temperature, liquid level, flow, or other value specified. Units in psi pressure will be denoted on the dial unless specified. Available with input ranges of 3-15 psi or 3-27 psi.

Receiver Gauge Ranges			
0/1	0/75	30/80	100/600
0/2	0/80	5/110	200/700
0/3	0/85	20/120	100/800
0/4	0/90	40/120	200/800
0/5	0/95	20/150	300/800
0/6	0/100	30/150	400/800
0/7	0/120	40/150	450/800
0/8	0/140	50/150	500/800
0/9	0/160	30/180	650/800
0/10	0/180	130/180	200/900
0/11	0/200	100/200	400/900
0/12	0/250	20/220	700/900
0/14	0/300	40/220	200/1000
0/15	0/350	30/240	400/1000
0/16	0/400	100/240	500/1000
0/17	0/500	30/250	600/1000
0/18	0/600	50/250	800/1000
0/19	0/700	100/250	200/1100
0/20	0/760	30/300	400/1200
0/21	0/800	50/300	500/1200
0/25	0/900	80/300	600/1200
0/26	0/1000	100/300	1000/1500
0/28	0/1500	50/350	300/1600
0/30	0/2000	80/350	1000/1600
0/35	0/3000	150/350	600/1800
0/40	0/4000	100/400	900/1800
0/45	0/5000	150/400	1200/1800
0/50	0/10,000	50/500	700/2000
0/55	0/15,000	100/500	1000/2500
0/60	0/20,000	200/500	1500/2500
0/65	0/30,000	300/500	900/3000
0/70	0/50,000	200/700	1500/3000

Square Root Ranges			
0/5	0/70	0/300	0/1500
0/10	0/80	0/350	0/2000
0/15	0/90	0/400	0/3000
0/20	0/100	0/500	0/4000
0/25	0/125	0/600	0/5000
0/30	0/150	0/700	0/10,000
0/40	0/175	0/800	
0/50	0/200	0/900	
0/60	0/250	0/1000	

Compound Ranges
30˝Hg/0/15 psi
30˝Hg/0/30 psi
30˝Hg/0/60 psi
30˝Hg/0/100 psi
30˝Hg/0/150 psi
30˝Hg/0/500 psi
30˝Hg/0/800 psi

STAINLESS STEEL CASE GAUGES & INDUSTRIAL GAUGES

ASME B40.100 Grade 1A (±1.0% of span)
ASME B40.100 Grade 2A (±0.5% of span)
ASME B40.100 Grade A (±2-1-2% of span)
ASME B40.100 Grade B (±3-2-3% of span)

Product Selection 87
Type 5500 & 6500 Stainless Steel Case 88
Type 1008 40/50 mm Gauges..... 89
Type 1008S 63/100 mm Gauges 90
Type 1008S/SL 63/100 mm Back Connect Gauges..... 91
Type 2008S/SL 63 mm Back Connect Gauges 92
Type 1009 Center Back Connect Duralife® Gauges 93
Type 1009 4½˝ and 6˝ Gauges 94
Type 1109 4½˝ Gauges 95
Type 1009, 1010, 1017 & 1220 Hydraulic Gauges..... 96
Type 1009, 1010, 1017 & 1220 Receiver Gauges..... 97
Type 1009, 1010, 1017 & 1220 Refrigeration and Ammonia Gauges 98
Type 2074, 2174, 2274 Digital Industrial Gauges 99
Type 1010 General Service Gauge 100
Type 1017 General Service Gauge 101
Type 1220 General Service Gauge 102
Type 1020S Christmas Tree Gauge 103
Type 1038, 1339 Duplex Gauges.....104
Type 1125, 1125A DP Gauges 105
Type 1127/1128 DP Gauges.....106
Type 1130 DP Gauges 107
Type 1131 DP Gauges 108
Type 1132 DP Gauges 109
Type 1133 DP Gauges 110
Type 1134 DP Gauges 111
Type 5503 DP Gauges 112
Type 5509 DP Gauges 113
Type 1150H, 1122 Special Application Gauges.....114
Type 1187, 1188 & 1189 Low Pressure Bellows Gauges.....115
Type 1490 Low Pressure Diaphragm Gauge.....116
Type 1495 Receiver Diaphragm Gauge.....117
Type DG25 All Purpose Digital Gauge.....118

ASHCROFT®

Product Selection Information
Stainless Steel Case Pressure Gauges

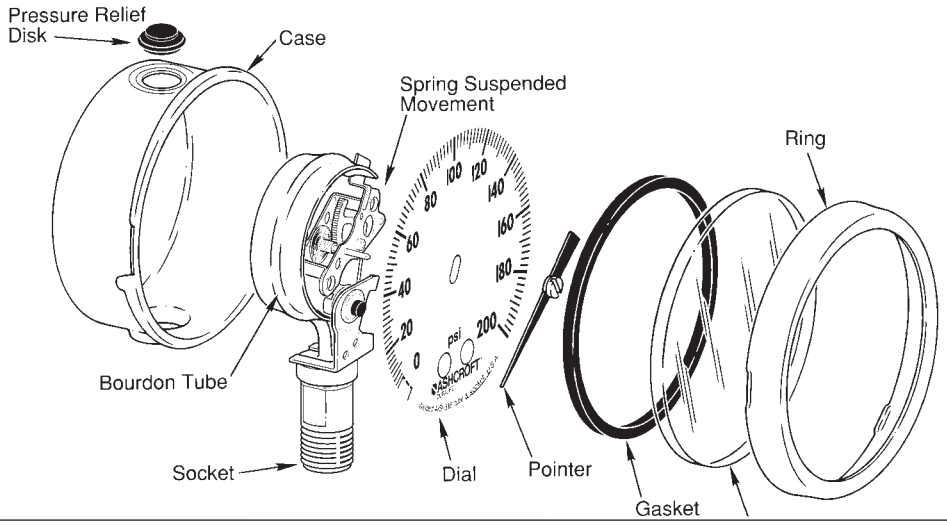

2½˝ 1009SW Shown

Consult ASME B40.100 for guidance in gauge selection

WARNING: To prevent misapplication, pressure gauges should be selected considering media and ambient operating conditions. Improper application can be detrimental to the gauge, causing failure and possible personal injury or property damage. The information contained in this catalog is offered as a guide to assist in making the proper selection of a pressure gauge. Additional information is available from Ashcroft Inc. or www.ashcroft.com.

Pressure Ranges:
As recommended by ASME B40.100, select a gauge with a full scale pressure range of approximately twice the normal operating pressure. The maximum operating pressure should not exceed approximately 75% of the full scale range. Failure to select a gauge range within these criteria may ultimately result in fatigue failure of the Bourdon tube.

Operating Conditions:
The operating conditions to which a gauge will be subjected must be considered. If the gauge will be subjected to severe vibration or pressure pulsation, liquid filling the gauge or selecting the patented Ashcroft Performance ***PLUS!™*** as well as various throttling and pulsation devices will be necessary to obtain normal product life.

Other than discoloration of the window and dial and hardening of the gasketing that may occur as process temperatures exceed 150°F, non liquid-filled gauges with polycarbonate windows, can withstand continuous operating temperatures up to 200°F (93°C). Liquid-filled gauges can withstand 150°F (65°C) but glycerin fill or polycarbonate window will tend to yellow. Accuracy at temperatures above or below the reference ambient temperature of 68°F (20°C) will be affected by approximately .4% per 25°F (4°C). Gauges with welded joints will withstand 750°F (450°F (232°C) with silver brazed joints) for short times without rupture, although other parts of the gauge will be destroyed and calibration will be lost. For continuous use and for process or ambient temperatures above 250°F (121°C), a diaphragm seal and or capillary or siphon is recommended.

Proper selection of the Bourdon system material is dependent on the process fluid to which the system will be subjected. If the correct material is not available, the use of a diaphragm seal may be necessary to protect the system from the process fluid. Liquid filled gauges with throttle plugs are recommended for the discharge side of positive displacement pumps.

Pressure Elements:
Available in a wide variety of materials, depending on dial size, including: brass, Phosphor bronze, alloy steel, 316 stainless steel, Monel. Proper selection of the Bourdon system material depends upon the process fluid to which the system will be subjected. If the correct material is not available, the use of a diaphragm seal is recommended to protect the system from the process fluid. If The gauge is subject to severe vibration or pressure pulsation, a liquid-filled gauge or ***PLUS!™*** is recommended.

Cases:
Ashcroft® stainless steel case gauges have 304 stainless steel cases. The 2½˝, 3½˝, 1009 and the 63mm and 100mm 1008 are field liquid fillable. The plug used on these gauges allows the user to vent a gauge should it be necessary.

Rings:
The ring, (bezel) is either a crimped design (1008) or bayonet (cam) design (1009).

Movements:
Movements are designed and materials of construction selected to reduce friction and extend wear life.

Dials:
Dials are uniformly graduated and have highly legible black markings. All gauges have a white epoxy coated background dial with black markings.

Windows:
Depending on the size and type, Ashcroft® stainless steel case gauges are available with polycarbonate, acrylic, shatterproof glass or glass windows. In the 2½ and 3½ 63 and 100mm 1009/1008 gauge the windows have a design that uses an O-ring in a groove in the window to seal the gauge. This prevents leaks for liquid filled gauges.

Pointers:
Depending on the type, Ashcroft® stainless steel gauges are available with adjustable or fixed pointers.

ASHCROFT®

Stainless Steel-Case Gauges
Type T5500 & T6500
EN 837-1 Class 1

- ***Meets EN 837-1***
- ***Open or solid front design***
- ***Dry, liquid filled or PLUS!™ Performance option.***
- ***100mm or 160mm case size***
- ***Protection IP65.***
- ***Optional ATEX approval CE Ex II 2 GDc.***
- ***Monel wetted system optional***
- ***Overload protection 130%***
- ***Optional electrical contacts***

The Ashcroft® T5500 and T6500 product line offers either open or solid front design depending on your safety requirements.

Available are 100 or 160mm case sizes, stainless steel or Monel wetted sytems, psi or metric pressure ranges. Industries served include chemical, petrochemical, power, machine, pulp, paper, food and beverage applications.

SPECIFICATIONS

Model No.:	T5500/T6500
Accuracy:	Standard: Class 1, EN B37-1 1% full scale Optional: 1⁄2% full scale
Ranges:	Vacuum, compound, pressure psi: –30in. Hg–0, 0-36,000 bar: –1-0, 0-2500
Dial Size:	100mm or 160mm diameter
Case Material:	304 stainless steel, 316 stainless steel optional
Case Style:	T5500: open front, cylindrical case, rear blowout disk T6500: solid front, cylindrical case, rear blowout back
Ring:	304 stainless steel 316 stainless steel optional
Window:	T5500: Standard: glass, Optional: laminated-safety glass or acrylic T6500: Standard: laminated safety glass Optional: acrylic
Dial:	Aluminum, white background, black figures and intervals.
Pointer:	Standard: aluminum black Optional: adjustable micrometer, red set hand, maximum pointer
Movement:	304/303 stainless steel
Bourdon Tube and Socket:	Standard: 316L stainless steel Optional: Monel
Connection Size:	¼ NPT male, ½ NPT male G ¼ B male, G ½ B male
Connection Location:	T5500: Lower or back T6500: Lower only
Weather Protection:	IP54: Dry case IP65: Liquid filled or hermetically sealed case
Temperature:	Ambient: –40-200°F Process: Max. 200°F dry Max. 100°C liquid filled Storage: –40-60°C
Weight (dry/filled) kg:	T5500: 100mm 2 lbs 160mm 4 lbs T6500: 100mm 2 lbs 160mm 4 lbs
Mounting:	Standard: stem Optional: flush or surface

OPTIONAL FEATURES

Fill:	L-Glycerin-Standard XGV-Silicone-Optional XGX-Halocarbon-Optional
***PLUS!* Performance:**	XLL
Shatter Proof Glass Window:	XSG
Acrylic Window:	XPD
Set Hand:	XSH
Maximum Pointer:	XEP

TO ORDER THIS T5500/T6500 PRESSURE GAUGE:

Dial Size
10 100mm
16 160mm

Type
T5500
T6500

System Material
(S) 316L SS
(P) Monel 400

Case Type
(D) Dry
(L) Liquid

Process Connection
(02) ¼ NPT male
(04) ½ NPT male
(13) G ¼ NPT B male
(15) G ½ NPT B male

Connection Location
(L) Lower
(B) Back

Range psi
0/15
0/30
0/60
0/100
0/160
0/200
0/300
0/400
0/600
0/800
0/1000
0/1500
0/2000
0/3000
0/5000
0/6000
0/10,000
0/20,000

Engineering Unit[1]
psi
BAR

Fill[2]
(GV) Silicone
(GX) Halocarbon

Options
(YW) Case Material 316L
(NH) Wire Tag
(TU) Throttle Plug SS
(6B) Oxygen Cleaned
(MP) Micrometer Pointer
(PD) Acrylic Glass
(SG) Safety Glass
(FX) Front Flange
(FW) Back Flange
(UF) U-Clamp
(LJ) Field Fillable
(AJ) Calibration 0.5% F.S.
(LL) *PLUS!* Performance Silicone Free
(AT4) Atex Listed, T4
(AT5) Atex Listed, T5
(AT6) Atex Listed, T6

(1) Others on application

(2) Glycerin fill standard when liquid filled gauge is specified.

Consult factory for guidance in product selection
Phone (203) 378-8281 or visit our
web site at www.ashcroft.com

ASHCROFT®

Stainless Steel-Case Gauges
Type 1008, ASME B40.100
Grade B (±3-2-3% of span)

- ***40mm and 50mm sizes***
- ***All-stainless steel construction***
- ***Dry or liquid-filled versions***
- ***Lower or centerback connections***
- ***Glass window standard***
- ***Front flange or U-clamp available for panel mounting***
- ***FlutterGuard™ liquid free performance available***
- ***RoHS compliant***

Ashcroft® 40mm and 50mm all stainless steel pressure gauges help to complete our full-line product offering of stainless steel gauges with dial sizes from 40mm to 100mm. These smaller size gauges are used whenever space limitations and atmospheric and process corrosion exist.

STANDARD RANGES

Pressure Ranges – Single Scale

psi	kg/cm²	kPa
0/15	0-1	0-100
0/30	0-2	0-200
0/60	0-2.5	0-250
0/100	0-4	0-400
0/160	0-6	0-600
0/200	0-10	0-1000
0/300	0-16	0-2000
0/400	0-25	0-2500
0/600	0-40	0-4000
0/800	0-60	0-6000
0/1000	0-100	0-10,000
0/1500	0-160	0-20,000
0/2000	0-250	0-25,000
0/3000		
0/5000		
0/10,000		
0/15,000		

Compound Ranges – Single Scale

psi	kg/cm²	kPa
30 in.Hg/15 psi	–1/0/1	–100/0/100
30 in.Hg/30 psi	–1/0/3	–100/0/300
30 in.Hg/60 psi	–1/0/5	–100/0/500
30 in.Hg/100 psi	–1/0/9	–100/0/900
30 in.Hg/150 psi	–1/0/15	–100/0/1500
30 in.Hg/300 psi	–1/0/25	–100/0/2500

Vacuum Ranges – Single Scale

psi	kg/cm²	
30/0 in.Hg	–1/0	

SPECIFICATIONS

Dial size:	40mm (1½″) and 50mm (2″)
Accuracy:	ASME B40.100 Grade B (±3-2-3% of span)
Case:	304 stainless steel with 304 stainless steel polished ring
Bourdon Tube and Socket:	316 stainless steel
Movement:	Stainless steel
Standard connections:	⅛ NPT standard for 40mm, ¼ NPT standard for 50mm
Non-Standard connections:	⅛ NPT for 50mm ¼ NPT for 40mm dry lower only
Dial:	Aluminum, white background with black markings. Pressure range: Vac. through 15,000 psi including compound
Pointer:	Aluminum
Window:	Glass (dry and liquid filled)

TO ORDER THIS 1008 PRESSURE GAUGE:

Select: **40** **1008** **S** **(L)** **01L** **1000#**

1. Dial size–40mm or 50mm
2. Case type–1008
3. Tube and socket material
4. Liquid filled (glycerin), leave blank if dry
5. Connection size–⅛ (01), ¼ (02)
6. Connection location–Lower (L), Center Back (B)
7. Standard pressure range–1000 psi

Consult factory for guidance in product selection
Phone (203) 378-8281 or visit our
web site at www.ashcroft.com

ASHCROFT®

Stainless Steel-Case Gauge
Type 1008S, 1.6% F.S.

- ***Patented PowerFlex™ movement isolates movement from shock and vibration for longer life***
- ***All stainless, all-welded construction for long life***
- ***PLUS!™ Performance Option:***
  - ***Liquid-filled performance in a dry gauge (option XLL)***
  - ***Reduces wear from vibration and pulsations without liquid-fill headaches***
- ***True Zero™ pointer indication – no stop pin to mask false zero reading – ensures safety and process control***
- ***RoHS compliant***

Available in 63mm and 100mm dials sizes, 1008S pressure gauges are field liquid fillable and field convertible for panel mounting. The gauge is available dry, liquid-filled weatherproof or hermetically sealed with PLUS!™ performance option. 63mm can be supplied to EN 837 standard with "XER" variation.

STANDARD RANGES

Single-Scale Dial	Dual-Scale Dial	
psi	**psi Inner Arc**	**kPa Outer Arc**
0/15	0/15	0/100
0/30	0/30	0/200
0/60	0/60	0/400
0/100	0/100	0/700
0/160	0/160	0/1100
0/200	0/200	0/1400
0/300	0/300	0/2000
0/400	0/400	0/2800
0/600	0/600	0/4000
0/1000	0/1000	0/7000
0/1500	0/1500	0/10,000
0/2000	0/2000	0/14,000
0/3000	0/3000	0/20,000
0/5000	0/5000	0/34,000
0/6000	0/6000	0/40,000
0/7500	0/7500	0/50,000
0/10,000	0/10,000	0/70,000
0/15,000	0/15,000	0/100,000
Vacuum in.Hg	**in.Hg**	**Vacuum**
30/0	30/0	–100/0
Comp. in.Hg/psi	**in.Hg/psi**	**kPa**
30/15	30/15	–100/100
30/30	30/30	–100/200
30/60	30/60	–100/400
30/100	30/100	–100/700
30/150	30/150	–100/1000
30/300	30/300	–100/2000

Other ranges available. Contact factory direct or through Ashcroft.com.

DUAL-SCALE AMMONIA RANGES

Compound in Hg/psi	°F Outer Arc
Vac/150	–40/84°F
Vac/300	–40/125°F

BOURDON SYSTEM SELECTION(1)

Ordering Code	Bourdon Tube & Tip Material(1)	Socket Material	Tube Type	Range Selection Limits (psi)	NPT Conn.(3)
S	316L stainless steel	316L stainless steel	C-Tube	Vac/800	⅛ , ¼ & ½(2)
S	316L stainless steel	316L stainless steel	Helical	1000/15,000	⅛ , ¼ & ½(2)

(1) For selection of the correct Bourdon system material, see the media application table on page 271.
(2) ½ NPT available 100mm lower only.
(3) ¼" JIS, BSP or DIN threads available on application.

TO ORDER THIS 1008 PRESSURE GAUGE:

Select:	63	1008	S	(L)	02L	XXX	1000#

1. Dial size–63mm or 100mm
2. Case type–1008
3. Tube and socket material
4. Liquid filled (glycerin), leave blank if dry
5. Connection size–⅛ (01), ¼ (02), ½ (04)
6. Connection location–Lower (L), Lower Back (B)
7. Optional Features–see page 267-268
8. Standard pressure range–1000 psi

Consult factory for guidance in product selection
Phone (203) 378-8281 or visit our
web site at www.ashcroft.com

ASHCROFT®

Stainless Steel-Case Gauge Type 1008S/SL, ASME B40.100 Grade B (±3-2-3% of span) Center Back Design

- ***ASME 3-2-3% grade B accuracy***
- ***True Zero™ pointer indication – no stop pin to mask false zero reading – ensures safety and process control***
- ***RoHS compliant***

Available in 63mm and 100mm dial sizes, 1008S/SL are center back connection pressure gauges, field liquid fillable and field convertible for panel mounting. ASME Grade B, 3-2-3% accuracy is standard. The gauge is available dry, liquid-filled weatherproof or hermetically sealed.

PRODUCT SPECIFICATIONS

Ashcroft Type No.:	1008S
Sizes:	63mm, 100mm
Case:	304SS
Ring:	304SS crimped
Window:	Polycarbonate
Dial:	Black figures on white background, aluminum
Pointer:	Black, aluminum
Bourdon Tube:	316 SS Bourdon tube and socket TIG welded. Throttle plug standard for all liquid filled gauges. Also on dry gauges above 1000 psi.
Socket:	316 SS, Buna-N O-ring seal
Movement:	Stainless steel, gear type.
Mounting:	Stem mounting or panel mounting with U-Clamp or Front Flange. All gauges have rear weld nuts for U-clamp mounting.
Connections:	¼ NPT center back
Ranges:	From Vac-10,000 psi and compound
Accuracy:	ASME 3-2-3% grade B
Fill Plug:	Buna-N ventable design
Protection:	Nema 4X / IP65 plug sealed Nema 3 / IP54 plug vented
Ambient Temperature:	–20°F to 200°F dry +20°F to 150°F glycerin filled(based on standard polycarbonate window)

OPTIONAL FEATURES

Liquid fill:	Glycerin
Mounting:	- Flush panel mounting 3 hole flange - Panel mounting clamps - Retrofit kit for oversized panel holes. Includes U-clamp and spacer flange.

STANDARD RANGES

psi
0/30
0/60
0/100
0/200
0/300
0/400
0/600
0/1000
0/2000
0/3000
0/5000

These ranges are in stock.
Other ranges available on application up to 20,000 psi

TO ORDER THIS 1008 PRESSURE GAUGE:

Select:	63	1008	S	(L)	02C	100#

1. Dial size–63mm (63) or 100mm (10)
2. Case type–1008
3. Tube and socket material–316 SS
4. Liquid filled (glycerin), leave blank if dry
5. Connection size–¼ (02)
6. Connection location–Center Back (C)
7. Pressure Range–0/100 psi

Consult factory for guidance in product selection
Phone (203) 378-8281 or visit our
web site at www.ashcroft.com

ASHCROFT®

Stainless Steel-Case Gauge
Type 2008S/SL 63mm Panel Gauge
EN 837-1, 1.6% accuracy

- ***EN837-1 1.6% accuracy***
- ***True Zero™ pointer indication – no stop pin to mask false zero reading – ensures safety and process control***
- ***RoHS compliant***
- ***Welded Flange***
- ***PowerFlex™ movement isolates movement from shock and vibration for longer life***
- ***MSL helium leak tested to 1X10^{-6} ATM$^{-cc/sec}$***
- ***PLUS!™ Performance (XLL)***

Ashcroft offers the 2008S stainless steel panel gauge to panel builders in the oil and gas industry, as well as food and pharmaceutical, where performance, longevity, and appearance are critical requirements.

PRODUCT SPECIFICATIONS

Ashcroft Type No.:	2008S
Sizes:	63mm
Case:	304SS
Ring:	304SS crimped
Window:	Polycarbonate
Dial:	Black figures on white background, aluminum
Pointer:	Friction adjust, black, aluminum
Bourdon Tube:	316L stainless steel C-shaped (vacuum-600 psi and compound). Helical (1000 psi-15,000 psi)
Socket:	316L stainless steel
Movement:	300 series stainless steel, Power*Flex*, polyester segment, overload/underload stops
Connections:	¼ NPT lower back with four $^{7}/_{16}$″ wrench flats
Ranges:	Vac-15,000 psi and compound
Accuracy:	1.6% full scale
Fill Plug:	Ventable and offset for ease of installation
Protection:	Nema 4X / IP65 plug sealed Nema 3 / IP54 plug vented
Ambient Temperature:	–40°F to 200°F dry +20°F to 150°F glycerin filled
Limitations:	–40°F to 150°F silicone filled

The 2008S utilizes many of the features of the Ashcroft Duralife® 1009 and 1008S pressure gauges including the patented Power*Flex*™ spring suspended movement design to prevent wear from vibration and pulsation; True Zero™ to indicate actual zero pressure without the use of a dial pin installed at “0”; and special laser welding procedures that ensure system leak integrity.

You can also request our ***PLUS!***™ Performance option on the 2008S panel gauges for liquid-filled gauge performance without the concerns of temperature error and possible leaks sometimes associated with liquid filled gauges. Just ask for “XLL.”

The welded 63mm panel mount flange makes for easy panel installation for new installations or on any retrofit of an Ashcroft or other brand panel gauge.

OPTIONAL FEATURES

Liquid fill:	Glycerin, silicone, halocarbon (includes throttle plug)
Dampening:	***PLUS!*** **Performance** (LL) (includes throttle plug)
Accuracy:	1% full scale (XAN) ASME

STANDARD RANGES

psi
0/15
0/30
0/60
0/100
0/200
0/300
0/400
0/600
0/1000
0/2000
0/3000
0/5000
0/10,000
0/15,000
30″Hg vac
Compound ranges

Also supplied in single and dual scale ranges including bar, kPa, and kg/cm^2.

TO ORDER THIS 2008 PRESSURE GAUGE:

Select:	63	2008	S	(L)	02B	100#
1. Dial size–63mm (63)						
2. Case type–2008						
3. Tube and socket material–316 SS						
4. Liquid filled (glycerin), leave blank if dry						
5. Connection size–¼ (02)						
6. Connection location–Lower Back (B)						
7. Pressure Range–0/100 psi						

Consult factory for guidance in product selection
Phone (203) 378-8281 or visit our
web site at www.ashcroft.com

ASHCROFT®

Duralife® Stainless Steel Case Gauge Type 1009, ASME B40.100 Grade 1A (±1% of span) 2½˝ and 3½˝ Dial

DESIGNED FOR SAFETY AND LONGER LIFE

- *5-year limited warranty of pressure system*
- *Patented PowerFlex™ movement isolates movement from shock and vibration for longer life*
- *All stainless, all-welded construction for long life*
- *ASME Grade 1A, 1% accuracy full scale*
- *True Zero™ pointer indication – no stop pin to mask false zero reading – ensures safety and process control*
- *PLUS!™ Performance Option:*
  - *Liquid-filled performance in a dry gauge*
  - *Fights vibration and pulsations without liquid-fill headaches*
  - *Order as option XLL*
  - *¼˝ & 63mm tubing connection*

OTHER FEATURES:

Available in 2½˝ and 3½˝ dial sizes, Duralife® pressure gauges are liquid fillable and field convertible for panel mounting. Both zero and span adjustments are standard.

The gauge is available dry, liquid-filled weatherproof or hermetically sealed with *PLUS!™* Performance option. A five year limited warranty is standard with the Type 1009 Duralife® gauge (on the pressure system).

The following Table is *not* for conversion purposes.

STANDARD RANGES (3)(4)(5)

Pressure psi	kg/cm² - bar	kPa
0/15	0/1	0/100
0/30	0/1.6	0/160
0/60	0/2.5	0/250
0/100	0/4	0/400
0/160	0/6	0/600
0/200	0/10	0/1000
0/300	0/16	0/1600
0/400	0/25	0/2500
0/600	0/40	0/4000
0/800	0/60	0/6000
0/1000	0/100	0/10,000
0/1500	0/160	0/16,000
0/2000	0/250	0/25,000
0/3000	0/400	0/40,000
0/4000	0/600	0/60,000
0/5000	0/1000	0/100,000
0/6000		
0/7500		
0/10,000		
0/15,000		
Vacuum		
30 in./0 in.Hg	–1/0	–100/0
Compound		
30 in.Hg/15 psi	–1/0/1.5	–100/0/150
30 in.Hg /30 psi	–1/0/3	–100/0/300
30 in.Hg /60 psi	–1/0/5	–100/0/500
30 in.Hg /100 psi	–1/0/9	–100/0/900
30 in.Hg /150 psi	–1/0/15	–100/0/1500
30 in.Hg /300 psi	–1/0/24	–100/0/2400

BOURDON SYSTEM SELECTION(1)

Ordering Code	Bourdon Tube & Tip Material(1)	Socket Material	Tube Type	Range Selection Limits (psi)	NPT Conn.(6)
AW	316L stainless steel	Bronze	C-Tube	Vac/600	¼
AW	316L stainless steel	Bronze	Helical	1000	¼
SW	316L stainless steel	316L stainless steel	C-Tube	Vac/600	¼ & ½(2)
SW	316L stainless steel	316L stainless steel	Helical	800/15,000	¼ & ½(2)

(1) For selection of the correct Bourdon system material, see the media application table on page 271.
(2) ½ NPT available 3½˝ lower SW system only.
(3) Type 1009 gauges may be ordered with metric single-scale dial: kPa,bar or kg/cm².
(4) Dual-scale dials will be supplied with standard metric inner scale and equivalent psi outer scale or with standard psi inner scale and equivalent metric outer scale–please specify.
(5) Special logos and scales available upon request.
(6) ¼˝ JIS, BSP or DIN threads available on SW systems. ¼˝ tubing connection also available.

TO ORDER THIS 1009 DURALIFE PRESSURE GAUGE:

Select:	35	1009	SW	(L)	02L	XXX	1000#
1. Dial size–2½˝, 3½˝							
2. Case type–1009							
3. Tube and socket material							
4. Liquid filled (glycerin), leave blank if dry							
5. Connection size–⅛ (01), ¼ (02) ½ (04) JP ¼˝ tubing connection							
6. Connection location–Lower (L), Lower Back (B)							
7. Optional Features–see page 267-268							
8. Standard pressure range–1000 psi							

Accessories: see pages 261-266

Consult factory for guidance in product selection
Phone (203) 378-8281 or visit our
web site at www.ashcroft.com

ASHCROFT®

Stainless Steel Case Gauge
Type 1009, ASME B40.100
Grade 1A (±1% of span)
4½″ and 6″ Dial

- *4½″ and 6″ stainless steel gauges*
- *Dry and liquid-filled versions*
- *Micrometer adjustable pointer*
- *Variety of Bourdon tube materials*
- *ASME Grade 1A, ±1% of span accuracy*
- *New PLUS!™ Performance Option:*
  - *Liquid-filled performance in a dry gauge*
  - *Minimizes wear from vibration and pulsations without liquid-fill headaches*
  - *Order as option XLL*

The following Table is *not* for conversion purposes.

STANDARD RANGES (4)

Pressure psi	kg/cm² - bar	kPa
0/15	0/1	0/100
0/30	0/1.6	0/160
0/60	0/2.5	0/250
0/100	0/4	0/400
0/160	0/6	0/600
0/200	0/10	0/1000
0/300	0/16	0/1600
0/400	0/25	0/2500
0/600	0/40	0/4000
0/800	0/60	0/6000
0/1000	0/100	0/10,000
0/1500	0/160	0/16,000
0/2000	0/250	0/25,000
0/3000	0/400	0/40,000
0/4000	0/600	0/60,000
0/5000	0/1000	0/100,000
0/6000	0/1600	0/160,000
0/7500		
0/10,000		
0/15,000		
0/20,000		
0/30,000		
Vacuum		
30 in. /0 in.Hg	–1/0	–100/0
Compound		
30 in.Hg/15 psi	–1/0/1.5	–100/0/150
30 in.Hg /30 psi	–1/0/3	–100/0/300
30 in.Hg /60 psi	–1/0/5	–100/0/500
30 in.Hg/100 psi	–1/0/9	–100/0/900
30 in.Hg /150 psi	–1/0/15	–100/0/1500
30 in.Hg/300 psi	–1/0/24	–100/0/2400

The 4½″ and 6″ Ashcroft® Type 1009 gauges are suitable where ambient corrosion is a major concern. Its stainless steel case and ring offer good appearance and excellent resistance to chemical, weather and corrosion attack. This 1009 has many optional features that allow a user to develop a basic or special product specification. The 1009 is part of the extensive line of Ashcroft stainless steel pressure gauges.

The gauge is available dry, liquid-filled weatherproof or hermetically sealed and *now* with ***PLUS!™*** Performance option.

BOURDON SYSTEM SELECTION(1)

Ordering Code	Bourdon Tube & Tip Material(1) (all joints TIG welded except "A")	Socket Material	Tube Type	Range Selection Limits (psi)	NPT Conn.(2)
A	Phosphor Bronze Brass Tip, Silver Brazed	Brass	C-Tube	12/1000	¼
S	316 stainless steel	316 stainless steel	C-Tube	12/1500	¼
			Helical	2000/20,000	½
P(3)(5)	K Monel	Monel 400	C-Tube	15/1500	¼
			Helical	2000/30,000(6)	½

(1) For selection of the correct Bourdon system material, see the media application table on page 271.
(2) Optional connections available: ½ NPT where ¼ NPT is standard, ¼ NPT where ½ NPT is standard.
(3) Use for applications where NACE Standard MR-01-75 is specified.
(4) Single-scale and dual-scale ranges available.
(5) 6″ dial not available with monel systems.
(6) High pressure AMINCO connection only (09 code)

TO ORDER THIS 1009 PRESSURE GAUGE:

Select:	45	1009	S	02L	XXX	1000#
1. Dial size–4½″, 6″						
2. Case type–1009						
3. Tube and socket material						
4. Connection size–¼ (02), ½ (04)						
5. Connection location–Lower (L), Lower Back (B)						
6. Optional features–see page 267-268						
7. Standard pressure range–1000 psi						

Accessories–see pages 261-266

Consult factory for guidance in product selection
Phone (203) 378-8281 or visit our
web site at www.ashcroft.com

ASHCROFT®

Stainless Steel Case Gauge
Type 1109, ASME B40.100
Grade 1A (±1% of span)
Solid Front

- ***Solid front case design with full blowout back***
- ***Temperature compensated case***
- ***4½˝ dial size***
- ***ASME B40.100 Grade 1A, (±1% of span) accuracy***
- ***300 Series SS case and ring***
- ***Ranges from vacuum through 100,000 psi***
- ***New PLUS!™ Performance Option:***
  - ***Liquid-filled performance in a dry gauge***
  - ***Fights vibration and pulsations without liquid-fill headaches***
  - ***Order as option XLL***

The Type 1109 Ashcroft® solid front stainless steel case offers many features not available elsewhere. With a true 4½˝ dial size, a fully temperature compensated case and blowout back for safety, the Type 1109 offers superior readability compared to the competitive 100mm case gauges. The Type 1109 has been designed to meet the needs of both the offshore platform market and also the waterblaster or waterjet markets.

For offshore platforms the Type 1109 is available dry, liquid-filled[3] or with the revolutionary ***PLUS!™*** Performance option. The rugged design of the Type 1109 with ranges to 100,000 psi, is well suited to meet the needs of the waterblaster or waterjet market. With the ***PLUS!™*** Performance standard on ranges above 30,000 psi this gauge offers superior readability and eliminates the headaches often associated with liquid-filled gauges.

STANDARD RANGES

Pressure psi	Compound psi
0/15	30 in.Hg/15 psi
0/30	30 in.Hg /30 psi
0/60	30 in.Hg /60 psi
0/100	30 in.Hg /100 psi
0/160	30 in.Hg /150 psi
0/200	30 in.Hg /300 psi
0/300	
0/400	
0/600	
0/800	
0/1000	
0/1500	
0/2000	
0/3000	
0/5000	
0/10,000	
0/20,000	
0/30,000	**NOTE:**
0/50,000	**Equivalent standard bar, kg/cm², and kPa metric**
0/80,000	**ranges are available.**
0/100,000	

BOURDON SYSTEM SELECTION[1]

Ordering Code	Bourdon Tube & Tip Material[1]	Socket Material	Tube Type	Range Selection Limits (psi)	NPT Conn. Lower Only
SD	316 stainless steel	316 stainless steel	C-Tube	Vac/1500	½[2]
	316 stainless steel	316 stainless steel	Helical	2000-20,000	½[2]
WD	Inconel 718	316 stainless steel	Helical	50,000-100,000	¼ high pressure

(1) For selection of the correct Bourdon system material, see the media application table on page 271.
(2) ¼ NPT optional, lower connection only.
(3) Liquid fill available on ranges 20,000 psi and below.

TO ORDER THIS 1109 PRESSURE GAUGE:

Select: 45 1109 SD 04L XXX 0/100#

1. Dial size–4½˝
2. Case type–1109
3. Bourdon system selection ordering code
4. Connection–¼ (02), ½ (04), ¼ high pressure (09), Lower Only(L)
5. Optional features–see page 267-268
6. Standard pressure range–100 psi
7. Accessories–see pages 261-266

Consult factory for guidance in product selection
Phone (203) 378-8281 or visit our
web site at www.ashcroft.com

ASHCROFT®

Hydraulic Gauges, Types 1009, 1010, 1017 & 1220, ASME B40.100 Grade 1A (±1% of span)

- ***4½˝ through 12˝ dials available***
- ***Stainless steel, aluminum and phenolic case materials***
- ***Wide range of types to combine specifics and price***
- ***Slotted link and throttle screw standard***

The Ashcroft® line of pressure gauges offers a product that is uniquely designed for rigorous hydraulic services.

Hydraulic gauges are supplied with a slotted link movement to avoid gear wear. All models are supplied with throttle devices as standard.

Type 1009

IN A RUSH? ASK FOR ASHCROFT GOLD SERVICE

SPECIFICATIONS

Gauge Type Number	Dial Size (Inches)	Case Material	Connection Location	Mounting	Method
1009-XS4TS	4½˝, 6˝	Stainless Steel	Lower/Back	Stem, Surface, Flush	–
1010-XS4TS	4½˝-12˝	Aluminum	Lower/Back	Stem, Surface	–
1017-XS4TS	4½˝, 6˝	Aluminum	Lower/Back	Flush	Back Flange, Flush Mounting Ring
1220-XS4TS	4½˝-8½˝	Phenolic	Lower/Back	Stem	

BOURDON SYSTEM SELECTION

Dial Size (Inches)	Order Code	Bourdon Tube & Tip Material[1] (all joints TIG welded except "A")[1]	Socket Material	Tube Type	Range Selection Limits (psi)	NPT Conn.[2]
4½˝, 6˝, 8½˝	A	Phosphor Bronze Tube-Brass Tip, Silver Brazed	Brass	C-Tube	12/1000	¼
4½˝, 6˝, 8½˝, 12˝	S	316 stainless steel	316 stainless steel	C-Tube	12/1500	¼
				Helical	2000/20,000	½
4½˝, 12˝	P	K Monel	Monel 400	C-Tube	15/1500	¼
				Helical	2000/30,000	½

(1) For selection of the correct Bourdon system material, see the media application table on page 271.
(2) Optional connections available: ½ NPT where ¼ NPT is standard, ¼ NPT where ½ NPT is standard.
(3) Single-scale and dual-scale ranges available.

STANDARD psi RANGES[3]

Range psi	Figure Interval	Minor Graduation
0/1000	100	10
0/1500	200	20
0/2000	200	20
0/3000	500	50
0/5000	1000	50
0/6000	1000	100
0/7500	1000	100
0/10,000	1000	100
0/15,000	2000	200
0/20,000	2000	200

Note: Dual-scale dials showing psi and tons on ram are available on application

STANDARD METRIC RANGES[3]

Range		Dial Graduations	
kg/cm² kilograms per sq. cm.	bar	Figure Interval	Minor Graduation
0/60	0/60	5	1
0/100	0/100	10	1
0/160	0/160	20	2
0/250	0/250	50	5
0/400	0/400	50	5
0/600	0/600	50	10
0/1000	0/1000	100	10
0/1600	0/1600	200	20

Range	Dial Graduation		Outer scale when dual range specified
kPa (kilopascal)	Figure Interval	Minor Graduation	psi
0/6000	500	100	0/850
0/10,000	1000	100	0/1400
0/16,000	2000	200	0/2200
0/25,000	5000	500	0/3500
0/40,000	5000	500	0/5500
0/60,000	5000	1000	0/8500
0/100,000	10,000	1000	0/14,000
0/160,000	20,000	2000	0/22,000

HOW TO ORDER THESE HYDRAULIC GAUGES:

Select: **45** **1009** **S** **02L** **XS4TS** **1000#**

1. Dial size– 4½˝, 6˝
2. Case code: 1010
3. Tube and socket material, (see chart above)
4. Connection size–¼ (02), ½ (04)
5. Connection location–Lower (L), Lower Back (B)
6. Options–see page 267-268
7. Standard pressure range–1000 psi

Consult factory for guidance in product selection
Phone (203) 378-8281 or visit our
web site at www.ashcroft.com

ASHCROFT®

Receiver Gauges, Types 1009, 1010, 1017 & 1220, ASME B40.100 Grade 1A (±1% of span)

- ***4½˝ through 12˝***
- ***Many case styles to choose from***
- ***Panel mount, stem mount and wall mount***
- ***Bronze systems standard(1)***
- ***Open-front case style***
- ***3-15 psi input with optional 3-27 psi input***

(1) Stainless Steel (S); Monel (P) optional

Ashcroft® receiver gauges are used in conjunction with pneumatic transmitters to indicate pressure, temperature, flow or other process parameters that can be transmitted by proportional variations in air pressure.

Type 1009

IN A RUSH? ASK FOR ASHCROFT GOLD SERVICE

SPECIFICATIONS

Gauge Type Number	Dial Sizes(1)	Case Material	System Assembly(2)	Pressure Range-psi	Pointer	Movement	Npt Conn.	Accuracy
1009A-XPR	4½˝, 6˝	Stainless Steel	Phosphor bronze Bourdon tube brass socket, silver brazed	3/15 and 3/27	Black, adjustable	Rotary geared, stainless steel pinion and segment shaft	¼	ASME B 40.1 Grade1A (±1% of span)
1010A-XPR	4½˝-12˝	Aluminum						
1017A-XPR	4½˝, 6˝	Aluminum						
1220A-XPR	4½˝-8½˝	Phenolic						

Gauge Type Number	Dial Size(1) (Inches)	Connection Location	Mounting	Method
1009-XPR	4½˝, 6˝	Lower/Back	Stem, Surface, Flush	–
1010-XPR	4½˝-12˝	Lower/Back	Stem, Surface	–
1017-XPR	4½˝, 6˝	Lower/Back	Flush	Back Flange, Flush Mounting Ring
1220-XPR	4½˝-8½˝	Lower/Back	Stem	

(1) Not all dial sizes available in all case types.
Type 1009 – 4½˝, 6˝; Type 1010 – 4½˝-12˝;
Type 1017 – 4½˝, 6˝; Type 1220 – 4½˝-8½˝
(2) Stainless Steel and monel optional

STANDARD RANGES(1)

0-10 sq rt/0-100 linear dual-scale
0-10 square root
0-100 linear

(1) Other ranges on request.

TO ORDER THESE RECEIVER GAUGES:

Select: **45** **1009** **A** **02** **L** **XPR** **3-15#**

1. Dial size
2. Case type
3. Tube and socket material
4. Connection size, ¼ (02), ½ (04)
5. Connection location, (L-Lower), (B-Lower Back)
6. Optional features (XPR always appears in code for receiver gauge)
7. Range of transmitted signal (also specify the scale to be shown on the dial face)

Consult factory for guidance in product selection
Phone (203) 378-8281 or visit our
web site at www.ashcroft.com

ASHCROFT®

Refrigeration & Ammonia Gauges
Types 1009/1010/1017/1220
ASME B40.100 Grade 1A
(±1% of span)

- ***4½˝ through 12˝ dials***
- ***Stainless steel, phenolic and aluminum case materials***
- ***Dual-scale dials with pressure and temperature indication***
- ***Wide range of refrigerant scales, including refrigerant 134A and ammonia***

Ashcroft® refrigeration and ammonia gauges are used to display pressure and temperature when measuring various sealed refrigeration systems. This dual-scale dial gauge has an inner pressure scale with black numerals and an outer temperature scale with red numerals. A selection of models exists to meet specification and price parameters.

Type 1010

IN A RUSH? ASK FOR ASHCROFT GOLD SERVICE

MATERIALS OF CONSTRUCTION

CASE STYLE	BOURDON TUBE & TIP MATERIAL	SOCKET MATERIAL	POINTER	MOVEMENT	NPT CONNECTION
Refrigerants	Phosphor Bronze/Brass (all joints silver brazed)	Brass	Black Adjustable	Stainless Steel with Teflon Coated Pinion	1/4 NPT Standard 1/2 NPT Optional
Ammonia	316 Stainless Steel (all welded joints)	316 SS	Black Adjustable	Stainless Steel with Teflon Coated Pinion	1/4 NPT Standard 1/2 NPT Optional

CASE STYLES

MODEL	MATERIAL	DIAL SIZE	CONN. LOCATION	MOUNTING
1009	Stainless Steel	4½˝ & 6˝	Lower & Back	Stem, Surface, Panel
1010	Aluminum	4½˝, 6˝, 8½˝, 12˝	Lower & Back	Stem, Surface, Panel
1017	Aluminum	4½˝ & 6˝	Back Only	Panel Only
1220	(1)	4½˝, 6˝, 8½˝, 12˝	Lower & Back	Stem, Surface, Panel

(1) 4½˝ Phenolic; 6˝ Polypropylene; 8½˝ Aluminum

REFRIGERANTS

CODE	REFRIGERANT
XR1	R-11
XR2	R-12
XR3	R-22
XR4	R-502
XR6	R-114
XR7	R-500
XR8	R-134A
XR9	R-123
AMMONIA	
XR5	Ammonia

STANDARD PRESSURE RANGES

RANGE	DIAL GRADUATIONS FIGURE INTERVAL	MINOR GRADUATIONS
30˝ Hg Vac/150 psi 30˝ Hg Vac/300 psi	10˝ Hg & 25 psi 30˝ Hg & 25 psi	2˝ Hg & 5 psi 5˝ Hg & 5 psi
–1/10 KgCm² –1/24 KgCm²	1 2	0.1 0.2
–1/10 Bar –1/24 Bar	1	0.1
–100/1000 kPa –100/2400 kPa	100 500	10 20

Dual scale pressure ranges available upon request with equivalent dual scale temperature scales.

TO ORDER THESE REFRIGERATION GAUGES:

Select: **45** **1010** **A** **02L** **XR5** **30 in.Hg Vac/150#**

1. Dial size–4½˝ thru 12˝
2. Case Type–1010
3. Tube and socket material–A, S
4. Connection size–¼ (02), ½ (04)
5. Connection location–Lower (L), Lower Back (B)
6. Optional features including refrigerant (see page 267-268)
7. Standard pressure range–30˝HgVac/150 psi

Accessories–see pages 267-268

Consult factory for guidance in product selection
Phone (203) 378-8281 or visit our
web site at www.ashcroft.com

ASHCROFT®

Digital Industrial Gauge
Types 2074, 2174 and 2274
ASME B40.100 Grade 3A
(±0.25% of span)

- *A Multi-Functional Digital Gauge with Optional:*
  - *4/20mA Output*
  - *(1) or (2) SPDT Switches*
- *±.25% of Span Terminal Point Accuracy*
- *IP 65 Weatherproof Case*
- *Three Case Options: Stainless Steel, Fiberglass Reinforced Thermoplastic or Aluminum*
- *Extra Large Display*
- *Intrinsically Safe, Class I, Div. 1 (optional)*
- *Easy-to-Use Menu Options: (all*
  - *Five Backlite Display Options*
  - *Twelve Engineering Units*
  - *Menu Configure Feature*
  - *Update Rate*
  - *Dampen Rate*
  - *Auto-Off*

LOOK FOR THESE AGENCY MARKS ON OUR PRODUCTS

PRODUCT SPECIFICATIONS

Type:	2074 (battery) 2174 (loop) 4-20mA (12-36Vdc) 2274 (line) (12-36Vdc)
Accuracy:	±.25% of span, terminal point
Case Size:	3″, 4½″
Case Material:	3″ stainless steel, 4½″ fiberglass reinforced thermoplastic or black epoxy coated aluminum
Case Encl. Rating:	Weatherproof, IP65
Wetted Materials:	17-4 stainless steel (sensor), 316 stainless steel (socket)
Socket Size:	¼ or ½ NPT, JIS, DIN, SAE, (½ NPT only with 4½″ case, others on application)
Socket Location:	Lower (6 o'clock), top, side
Ranges:	15 psi/Vac. thru 20,000 psi (see engineering units below for other units)
Operating Temp.:	14/140°F (10/60°C)
Temp. Error:	(Zero & Span) .04%/°F Reference temp. 70°F
Storage Temp.:	–4/158° (–20°/70°C)

DISPLAY

Type:	LCD
Display Digits:	Five (5)
Character Height:	3″ case: .60″, 4½″ case: .88″
Backlite:	Optional
Bar Graph:	Yes
Battery Life:	3″ <500 hrs., 4½″ <2500 hrs.
Agency Approvals:	CE, FM (Intrinsically Safe Class I, Div 1) (optional)

KEYPAD FUNCTIONS

On/Off:	Manually turns unit on and off
Zero/Clear:	Zeros display or clears min. and max. values when displayed
Min/Max ▼ (down) Arrow Key:	Stores min & max values, arrow key allows for scrolling thru menu items
Menu Key:	Provides access to menu options
Backlite ▲ (up) Arrow Key: (Backlite optional)	Manually turns backlite on and off, arrow key allows for five menu options. ▲ (up) arrow key allows for scrolling thru menu options
Enter:	Selects items in the menu

MENU MODE

Engineering Units:	10 units of measurement are available; psi, In. H_2O (with three temp. options: 20°C, 60°F, 4°C*), Ft. H_2O, mPa, mBar, kPa, kg/cm2, Bar, inHg and mmHg
Configuration Mode: (Config):	Allows for changes to default settings of gauge Including zero disable feaure
Bar Graph (Graph):	Allows for adjustment of bargraph and 4-20
Auto Off (Off):	Allows for changes to auto off of gauge, five options: Never, 2 min., 5 min., 15 min., 30 min.
Update Rate:	Four options: 100 ms, 200 ms, 500 ms, 1 sec
Dampening:	Six options: None, average, 2, 4, 6, 8 times per 100ms
Backlite:	Five options: Never, 10 sec., 30 sec., 1 min., 5 min.
Field Recalibration:	Allows for recalibration of zero, mid-scale and span (password protected)

OPTIONS

Description	Code	Case Size
Case Options		
Aluminum Case (black epoxy coated) (Glass reinforced thermoplastic case standard)	AY	4½″ only
Switch Options		
(1) SPDT Switch (12-36Vdc)	U1	3″, 4½″
(2) SPDT Switch (12-36Vdc)	U2	3″, 4½″
Line Power with 4-20mA output (Line power (Type 2274) required for switching options) (Terminal blocks standard with 4½″ case) (3′ shielded cable standard)	AO	3″, 4½″
Wiring Options		
(3′ shielded cable standard) (Terminal blocks standard with 4½″ case.)	EN	4½″
Keypad Options		
Backlite	BL	3″, 4½″
Miscellaneous Options		
Battery Backup (Battery standard with Type 2074) (Available with Types 2174 & 2274)	BK	3″, 4½″
Weatherproof ABS Gauge Carrying Case	S7	3″ only
Protective Rubber Boot (black)	B1	3″ only
Protective Rubber Boot (orange)	B2	3″ only
Protective Front Cover	PP	3″ only
Individual Certified Calibration Chart	C4	
Cleaned for Gaseous Oxygen Service	6B	

DIGITAL INDUSTRIAL GAUGE RANGES (Units In horizontal rows not equivalent ranges):

psi	in.Hg (vacuum)	Comp. (psi)	mmHg (pressure)	in.Hg (pressure)	in. H_2O	mBar	ft. H_2O	mPa	kPa	Bar/ KSC
15	30	15#&Vac	800	30	400	1000	60	1	100	1
30		30#&Vac	1000	60	800	1500	160	1.6	160	1.6
60		60#&Vac	2000	100	1000	2000	200	2.5	250	2.5
100		100#&Vac	3000	160		2500	300	4	400	4
160			5000	200		4000	400	6	600	6
200			10,000	300		5000	600	10	1000	10
300				400		6000	1000	16	1600	16
600				600		10,000		25	2500	25
800				800		15,000		40	4000	40
1000						20,000		60	6000	60
1500								100	10,000	100
2000								140	16,000	160
3000									25,000	250
5000									40,000	400
8000									60,000	600
10,000									100,000	1000
15,000									140,000	1400
20,000										

TO ORDER THIS DIGITAL INDUSTRIAL GAUGE:

Select: 30 2074 SD 02 L 100# XXX

1. Dial Size: 3″
2. Type: 2074
3. Wetted parts: 316 SS
4. Connections: ¼ NPT
5. Lower:
6. Range: 100 psi
7. Optional Characters:

Consult factory for guidance in product selection
Phone (203) 378-8281 or visit our
web site at www.ashcroft.com

ASHCROFT®

General Service Gauge
Type 1010, ASME B40.100
Grade 1A (±1% of span)

- ***Available in 4½˝, 6˝, 8½˝ and 12˝ dial sizes (only model with a 12˝ dial)***
- ***Solid-front case style, black epoxy-painted aluminum case***
- ***Threaded ring, black epoxy painted***
- ***Back flange for wall mounting***

The Ashcroft® Type 1010 gauge is the most economical of the general service industrial gauges having 1% accuracy. The 1010 also is the only Ashcroft gauge available in sizes up to 12˝ in diameter.

The following Table is *not* for conversion purposes.

STANDARD RANGES[3]

Pressure psi	kg/cm² - bar	kPa
0/15	0/1	0/100
0/30	0/1.6	0/160
0/60	0/2.5	0/250
0/100	0/4	0/400
0/160	0/6	0/600
0/200	0/10	0/1000
0/300	0/16	0/1600
0/400	0/25	0/2500
0/600	0/40	0/4000
0/800	0/60	0/6000
0/1000	0/100	0/10,000
0/1500	0/160	0/16,000
0/2000	0/250	0/25,000
0/3000	0/400	0/40,000
0/4000	0/600	0/60,000
0/5000	0/1000	0/100,000
0/6000	0/1600	0/160,000
0/7500		
0/10,000		
0/15,000		
0/20,000		
0/30,000		
Vacuum		
30 in./0 in.Hg	–1/0	–100/0
Compound		
30 in.Hg/15 psi	–1/0/1.5	–100/0/150
30 in.Hg /30 psi	–1/0/3	–100/0/300
30 in.Hg /60 psi	–1/0/5	–100/0/500
30 in.Hg/100 psi	–1/0/9	–100/0/900
30 in.Hg /150 psi	–1/0/15	–100/0/1500
30 in.Hg/300 psi	–1/0/24	–100/0/2400

BOURDON SYSTEM SELECTION

Dial Size (inches)	Order Code	Bourdon Tube & Tip Material[1] (all joints TIG welded except "A")	Socket Material	Tube Type	Range Selection Limits (psi)	NPT Conn.[2]
4½˝, 6˝ 8½˝	A	Phosphor Bronze Brass Tip, Silver Brazed	Brass	C-Tube	12/1000	¼
4½˝, 6˝ 8½˝, 12˝	S	316 stainless steel	316 stainless steel	C-Tube	12/1500	¼
				Helical	2000/20,000	½
4½˝	P	K Monel	Monel 400	C-Tube	15/1500	¼
				Helical	2000/30,000	½

(1) For selection of the correct Bourdon system material, see the media application table on page 271.

(2) Optional connections available: ½ NPT where ¼ NPT is standard, ¼ NPT where ½ NPT is standard.

(3) Single-scale and dual-scale ranges available.

TO ORDER THIS 1010 PRESSURE GAUGE:

Select: **45** **1010** **A** **02L** **XXX** **1000#**

1. Dial size–4½˝, thru 12˝
2. Case type–1010
3. Tube and socket material
4. Connection size–¼ (02), ½ (04)
5. Connection location–Lower (L), Lower Back (B)
6. Optional features–see page 267-268
7. Standard pressure range –1000 psi

Accessories–see pages 261-266

Consult factory for guidance in product selection
Phone (203) 378-8281 or visit our
web site at www.ashcroft.com

ASHCROFT®

General Service Gauge
Type 1017, ASME B40.100
Grade 1A (±1% of span)

- ***Available in 4½˝ and 6˝ dial sizes***
- ***Solid-front case style, black epoxy-painted aluminum case***
- ***Hinged-steel black enamel texture finish panel ring***

The Ashcroft® Type 1017 gauge is the most economical of the general service gauges when flush panel-mounting is required.

The following Table is *not* for conversion purposes.

STANDARD RANGES[3]

Pressure psi	kg/cm² - bar	kPa
0/15	0/1	0/100
0/30	0/1.6	0/160
0/60	0/2.5	0/250
0/100	0/4	0/400
0/160	0/6	0/600
0/200	0/10	0/1000
0/300	0/16	0/1600
0/400	0/25	0/2500
0/600	0/40	0/4000
0/800	0/60	0/6000
0/1000	0/100	0/10,000
0/1500	0/160	0/16,000
0/2000	0/250	0/25,000
0/3000	0/400	0/40,000
0/4000	0/600	0/60,000
0/5000	0/1000	0/100,000
0/6000		
0/7500		
0/10,000		
0/15,000		
0/20,000		
Vacuum		
30 in./0 in.Hg	–1/0	–100/0
Compound		
30 in.Hg/15 psi	–1/0/1.5	–100/0/150
30 in.Hg /30 psi	–1/0/3	–100/0/300
30 in.Hg /60 psi	–1/0/5	–100/0/500
30 in.Hg/100 psi	–1/0/9	–100/0/900
30 in.Hg /150 psi	–1/0/15	–100/0/1500
30 in.Hg/300 psi	–1/0/24	–100/0/2400

BOURDON SYSTEM SELECTION

Ordering Code Conn.[1]	Bourdon Tube & Tip Material[1] (all joints TIG welded except "A")	Socket Material	Tube	Range Selection Type	NPT Conn.[2]
A	Phosphor Bronze Brass Tip, Silver Brazed	Brass	C-Tube	12/1000	¼
S	316 stainless steel	316 stainless steel	C-Tube	12/1500	¼
			Helical	2000/20,000	½
P[4]	K Monel	Monel 400	C-Tube	15/1500	¼
			Helical	2000/30,000	½

(1) For selection of the correct Bourdon system material, see the media application table on page 271.
(2) Optional connections available: ½ NPT where ¼ NPT is standard, ¼ NPT where ½ NPT is standard.
(3) Single-scale and dual-scale ranges available.
(4) 6˝ dial not available with monel system.

TO ORDER THIS 1017 PRESSURE GAUGE:

Select:	45	1017	A	02B	XXX	1000#
1. Dial size–4½˝, 6˝						
2. Case type–1017						
3. Tube and socket material						
4. Connection size–¼ (02), ½ (04)						
5. Connection location–Lower Back (B) only						
6. Optional features–see page 267-268						
7. Standard pressure range –1000 psi						
Accessories–see pages 261-266						

Consult factory for guidance in product selection
Phone (203) 378-8281 or visit our
web site at www.ashcroft.com

ASHCROFT®

General Service Gauge
Type 1220, ASME B40.100
Grade 1A (±1% of span)

- ***Available in 4½˝, 6˝ and 8½˝ dial sizes***
- ***Solid-front style***
- ***Lower or back connect***

The Ashcroft® Type 1220 is a versatile general service gauge. Lower and back connections allow the gauge to be used for many installations.

4½˝ case size shown

The following Table is *not* for conversion purposes.

STANDARD RANGES[3]

Pressure psi	kg/cm² - bar	kPa
0/15	0/1	0/100
0/30	0/1.6	0/160
0/60	0/2.5	0/250
0/100	0/4	0/400
0/160	0/6	0/600
0/200	0/10	0/1000
0/300	0/16	0/1600
0/400	0/25	0/2500
0/600	0/40	0/4000
0/800	0/60	0/6000
0/1000	0/100	0/10,000
0/1500	0/160	0/16,000
0/2000	0/250	0/25,000
0/3000	0/400	0/40,000
0/4000	0/600	0/60,000
0/5000	0/1000	0/100,000
0/6000		
0/7500		
0/10,000		
0/15,000		
0/20,000		
Vacuum		
30 in./0 in.Hg	–1/0	–100/0
Compound		
30 in.Hg/15 psi	–1/0/1.5	–100/0/150
30 in.Hg /30 psi	–1/0/3	–100/0/300
30 in.Hg /60 psi	–1/0/5	–100/0/500
30 in.Hg/100 psi	–1/0/9	–100/0/900
30 in.Hg /150 psi	–1/0/15	–100/0/1500
30 in.Hg/300 psi	–1/0/24	–100/0/2400

BOURDON SYSTEM SELECTION

Ordering Code Conn.[1]	Bourdon Tube & Tip Material[1] (all joints TIG welded except "A")	Socket Material	Tube	Range Selection Type	NPT Conn.[2]
A	Phosphor Bronze Brass Tip, Silver Brazed	Brass	C-Tube	12/1000	¼
S	316 stainless steel	316 stainless steel	C-Tube	12/1500	¼
			Helical	2000/20,000	½
P[4]	K Monel	Monel 400	C-Tube	15/1500	¼
			Helical	2000/30,000	½

(1) For selection of the correct Bourdon system material, see the media application table on page 2715.
(2) Optional connections available: ½ NPT where ¼ NPT is standard, ¼ NPT where ½ NPT is standard.
(3) Single-scale and dual-scale ranges available.
(4) 6˝ and 8½˝ dial not available with Monel system.

CASE MATERIAL

Dial Size	Case Material
4½˝	Phenol
6˝	Polypropylene
8½˝	Aluminum

TO ORDER THIS 1220 PRESSURE GAUGE:

Select:	45	1220	A	02L	XXX	1000#
1. Dial size–4½˝, 6˝ and 8½˝						
2. Case type–1220						
3. Tube and socket material						
4. Connection size–¼ (02), ½ (04)						
5. Connection location–Lower (L), Lower Back (B)						
6. Optional features–see page 267-268						
7. Standard pressure range–1000 psi						

Consult factory for guidance in product selection
Phone (203) 378-8281 or visit our
web site at www.ashcroft.com

ASHCROFT®

Christmas Tree Gauges
Type 1020S, ASME B40.100
Grade 1A (±1% of span)

- ***Available in 4½˝ dial size only***
- ***All-stainless steel case and ring***
- ***316 stainless steel Bourdon tube and socket***
- ***Micrometer-adjustable pointer***

Ashcroft® Type 1020S Christmas Tree gauges are designed to the specific needs of oil fields where rugged construction and minimal maintenance is important.

STANDARD RANGES

Type 1020S

Pressure (psi)

Range	Figure Interval	Minor Graduation
0/1000	100	10
0/2000	200	20
0/3000	300	50
0/5000	500	50
0/10,000	1000	100
0/20,000	2000	200

CASE TYPE

Gauge Type Number	Dial Size (inches)	Case & Ring Material Finish	Bourdon Tube & Tip Material	Socket Material	Pressure Range (psi)	Pointer	Movement	NPT Connection
XMAS TREE 1020S	4½	Case: Stainless Steel Ring: Bayonet Lock Stainless Steel Both polished	316 Stainless Steel (all joints TIG welded)	316 Stainless Steel	1000/20,000	Micrometer Adjustable	Stainless Steel Teflon coated pinion and sector shaft, rotary geared	½ ¼ optional

TO ORDER THIS TYPE 1020R CHRISTMAS TREE GAUGE:

Select: **45** **1020** **S** **04L** **XXX** **1000#**

1. Dial size–4½˝
2. Case type–1020
3. Tube and socket material–see charts above
4. Connection size–¼ (02), ½ (04)
5. Connection location–Lower (L) only
6. Optional features
7. Standard pressure range–1000 psi

Consult factory for guidance in product selection
Phone (203) 378-8281 or visit our
web site at www.ashcroft.com

ASHCROFT®

Duplex Gauges
Type 1038, 1339
ASME B40.100
Grade A (±2-1-2% of span)

- ***Available in 3½˝ and 4½˝ dial sizes***
- ***Bronze Bourdon tube and brass sockets***
- ***Two independent systems and movements***
- ***Non-adjustable red and black pointers***

The Ashcroft® Type 1038 duplex gauge is used to display two separate input pressures on the same gauge for comparison purposes.

STANDARD RANGES

Type 1038/1339

Pressure (psi)

Range	Figure Interval	Minor Graduation
0/30	5	0.5
0/60	5	1
0/100	10	1
0/160	20	2
0/200	20	2
0/300	30	5
0/600	50	10
0/800	100	10
0/1000	100	10

Type 1038/1339 Compound

Range	Figure Interval		Minor Graduation	
	Inches Mercury	psi	Inches Mercury	psi
30 in.Hg/15 psi	5	3	1	0.5
30 in.Hg/30 psi	10	5	1	0.5
30 in.Hg/60 psi	10	10	1	1
30 in.Hg/100 psi	10	10	1	1
30 in.Hg/150 psi	10	20	2	2
30 in.Hg/300 psi	30	25	5	5

CASE TYPE

Gauge Type Number	Dial Size (inches)	Case & Ring Material Finish	Bourdon Tube & Tip Material	Socket Material	Pressure Range (psi)	Pointer	Movement	NPT Conn.
DUPLEX 1038A	3½, 4½	Case: 3½˝, 4½˝ aluminum Ring: Threaded aluminum All black epoxy coated	Phosphor Bronze Tip: Brass (all joints silver brazed, soldered below 100 psi)	Brass	30/1000	Non Adjustable Black and Red	Bronze-bushed	¼
DUPLEX 1339A	4½	Case: Aluminum Ring: Hinged Aluminum All black epoxy coated	Phosphor Bronze Tip: Brass (all joints silver brazed soldered below 100 psi)	Brass	30/1000	Non Adjustable Black and Red	Bronze-bushed	¼ Back Conn. only

CASE TYPE

RANGE		DIAL GRADUATIONS		RANGE	DIAL GRADUATIONS		Outer Range When Dual Range Specified psi
kg/cm²	bar	Figure Interval	Minor Graduation	kPa (kilopascal)	Figure Interval	Minor Graduation	
Pressure							
0/2.5	0/2.5	0.5	0.05	0/250	50	5	0/35
0/4	0/4	0.5	0.05	0/400	50	5	0/55
0/6	0/6	0.5	0.05	0/400	50	5	0/85
0/10	0/10	1	0.1	0/1000	100	10	0/140
0/16	0/16	2	0.2	0/1600	200	20	0/220
0/25	0/25	5	0.5	0/2500	500	50	0/350
0/40	0/40	5	0.5	0/4000	500	50	0/550
0/60	0/60	5	1	0/6000	500	100	0/850
Compound							
–1/1.5	–1/0/1.5	0.5	0.05	–100/150	50	5	30˝Hg/20
–1/3	–1/0/3	0.5	0.05	–100/300	50	5	30˝Hg/40
–1/5	–1/0/5	0.5	0.1	–100/500	50	10	30˝Hg/70
–1/9	–1/0/9	1	0.1	–100/900	100	10	30˝Hg/125
–1/15	–1/0/15	1	0.1	–100/1500	200	20	30˝Hg/215
–1/24	–1/0/24	2	0.2	–100/2400	500	20	30˝Hg/340

TO ORDER THIS 1038, 1339 DUPLEX GAUGES:

Select: **45** **1038** **A** **02L** **XXX** **1000#**

1. Dial size–3½˝ and 4½˝
2. Case type–1038, 1339
3. Tube and socket material
4. Connection size–¼ (02)
5. Connection location–Lower (L), Back (B)
6. Optional features
7. Standard pressure range–1000 psi

Consult factory for guidance in product selection
Phone (203) 378-8281 or visit our
web site at www.ashcroft.com

ASHCROFT®

Differential Pressure Gauges
Types 1125, 1125A
ASME B40.100
Grade A (±2-1-2% of span)

- ***Available in 4½˝ and 6˝ dial sizes***
- ***Aluminum cases***
- ***Bronze Bourdon tube and socket***
- ***Ranges through 1000 psi***
- ***Micrometer-adjustable pointer***
- ***Available with electric contacts***
- ***Static pressures from 30-1500 psi depending on the range of gauge***
- ***Pointer indicator with zero at seven o'clock (1125) or twelve o'clock position (1125A)***
- ***Built-in back case flange for easy wall mounting***

The Ashcroft® differential pressure gauge is an economical way to display the difference of two separate inputs on one dial indicator. The case style is similar to other Ashcroft gauges, making panel gauge consistency possible. This product is supplied with bronze Bourdon tube and socket.

STANDARD RANGES

Type 1125 (210° dial arc)

Pressure (psi)

Range	Figure Interval	Minor Graduation	Static Pressure Limits*
0/20	5	0.2	30
0/30	5	0.5	60
0/60	10	1	120
0/100	10	1	200
0/160	20	2	300
0/200	20	2	300
0/300	50	5	450
0/400	50	5	600
0/600	100	10	900
0/800	100	10	1200
0/1000	100	10	1500

*Maximum pressure that can be admitted into Bourdon tubes.

Type 1125A (210° dial arc) Zero centered dial

Pressure (psi)

Range	Figure Interval	Minor Graduation	Static Pressure Limits*
10/10	2	0.2	30
15/15	5	0.5	60
30/30	10	1	120
50/50	10	1	200
80/80	20	2	300
100/100	20	2	300
150/150	50	5	450
200/200	50	5	600
300/300	100	10	900
400/400	100	10	1200
500/500	100	10	1500

*Maximum pressure that can be admitted into Bourdon tubes.

CASE TYPE

Gauge Type Number	Dial Size (inches)	Case & Ring Material Finish	Bourdon Tube & Tip Material	Socket Material	Pressure Range (psi)	Pointer	Movement	NPT Connection
DIFFERENTIAL 1125 1125A	4½, 6(1)	Case: Aluminum Ring: Threaded aluminum All black epoxy coated	Phosphor Bronze Tip: Brass (all joints silver brazed)	Bronze	1125: 20/1000 1125A 10/0/10 500/0/500	Micrometer Adjustable	Bronze-bushed Overload & Vacuum Stops-Std.	¼

1125A dial indicates zero at 12:00 (1) 6˝ lower connect only.

METRIC RANGES

	PRESSURE RANGE		DIAL GRADUATIONS		RANGE	DIAL GRADUATIONS		Outer Range When Dual Range Specified psi
	kg/cm²	bar	Figure Interval	Minor Graduation	kPa (kilopascal)	Figure Interval	Minor Graduation	
Type 1125	0/1.4	0/1.4	0.2	0.02	0/140	20	2	0/20
	0/2	0/2	0.5	0.05	0/200	50	5	0/28
	0/4	0/4	0.5	0.05	0/400	50	5	0/55
	0/7	0/7	0.5	0.1	0/400	50	10	0/100
	0/11	0/11	2	0.2	0/1100	200	20	0/160
	0/14	0/14	2	0.2	0/1400	200	20	0/200
	0/20	0/20	5	0.5	0/2000	250	50	0/300
	0/28	0/28	5	0.5	0/2800	500	50	0/400
	0/40	0/40	5	0.5	0/4000	500	50	0/600
	0/56	0/56	10	1	0/5600	1000	100	0/800
	0/70	0/70	10	1	0/7000	1000	100	0/1000
Type 1125A	0.7/0.7	0.7/0.7	0.2	0.02	70/70	20	2	10/10
	1/1	1/1	0.5	0.05	100/100	50	5	14/14
	2/2	2/2	0.5	0.05	200/200	50	5	28/28
	3.5/3.5	3.5/3.5	0.5	0.1	350/350	50	10	50/50
	5.5/5.5	5.5/5.5	2	0.2	550/550	200	20	80/80
	7/7	7/7	2	0.2	700/700	200	20	100/100
	10/10	10/10	5	0.5	1000/1000	250	50	150/150
	14/14	14/14	5	0.5	1400/1400	500	50	200/200
	20/20	20/20	5	0.5	2000/2000	500	50	400/400
	28/28	28/28	10	1	2800/2800	1000	100	400/400
	35/35	35/35	10	1	3500/3500	1000	100	500/500

TO ORDER THESE 1125, 1125A DIFFERENTIAL GAUGES:

Select: 45 1125 02L XXX 1000#

1. Dial size–4½˝, 6˝
2. Case type–1125, 1125A
3. Connection size–¼ (02)
4. Connection location–Lower (L), Back (B)
5. Optional features
6. Standard pressure range–1000 psi

Consult factory for guidance in product selection
Phone (203) 378-8281 or visit our
web site at www.ashcroft.com

MADE IN U.S.A.

ASHCROFT®

Differential Pressure Gauges
Types 1127, 1128
ASME B40.100
Grade A (±2-1-2% of span)

- ***316 stainless steel wetted parts***
- ***Available in 4½˝ or 6˝ dial sizes***
- ***Ranges from 10 psi-1000 psi***
- ***Static pressures from 45 psi-1200 psi depending on the range of the gauge***
- ***Pointer indicator with zero at seven (1127) or twelve o'clock position (1128)***
- ***Built-in back case flange for easy wall mounting***
- ***Lower connect only***

When the process is corrosive to gauges with bronze/brass wetted parts an alternative was to isolate the gauge from the process with capillary and isolators or diaphragm seals. Now, when the process is compatible with 316 stainless steel, the user can select Types 1127 or 1128 differential pressure gauges with 4½˝ or 6˝ dials.

STANDARD RANGES

Type 1127 (270° dial arc)

Pressure Range (psi)	Figure Interval	Minor Graduation	Static Pressure Limits*
0/10	5	0.2	45
0/20	5	0.2	45
0/30	5	0.5	45
0/60	10	1	90
0/100	10	1	130
0/160	20	2	208
0/200	20	2	260
0/300	50	5	390
0/400	50	5	520
0/600	100	10	780
0/800	100	10	1040
0/1000	100	10	1200

*Maximum pressure that can be admitted into Bourdon tubes.

Type 1128 (270° dial arc) Zero centered dial

Pressure Range (psi)	Figure Interval	Minor Graduation	Static Pressure Limits*
10/0/10	2	0.5	45
15/0/15	3	0.2	45
30/0/30	5	1	90
50/0/50	10	1	130
100/0/100	20	2	260
200/0/200	50	5	520
300/0/300	100	10	780
400/0/400	100	10	1040

*Maximum pressure that can be admitted into Bourdon tubes.

METRIC RANGES

Type 1127 (270° dial arc)

PRESSURE RANGE		DIAL GRADUATIONS	
kg/cm²	bar	Figure Interval	Minor Graduation
0/1	0/1	0.2	0.02
0/2	0/2	0.5	0.05
0/4	0/4	0.5	0.05
0/7	0/7	0.5	0.05
0/11	0/11	2	0.2
0/14	0/14	2	0.2
0/21	0/21	5	0.5
0/28	0/28	5	0.5
0/42	0/42	5	0.5
0/56	0/56	10	1
0/70	0/70	10	1

Type 1128 (210° dial arc) Zero centered dial

PRESSURE RANGE		DIAL GRADUATIONS	
kg/cm²	bar	Figure Interval	Minor Graduation
1/0/1	1/0/1	0.5	0.05
2/0/2	2/0/2	0.1	0.01
3.5/0/3.5	3.5/0/3.5	0.5	0.1
5.5/0/5.5	5.5/0/5.5	2	0.2
7/0/7	7/0/7	2	0.2
10.5/0/10.5	10.5/0/10.5	5	0.5
14/0/14	14/0/14	5	0.5
21/0/21	21/0/21	5	0.5
28/0/28	28/0/28	10	1
35/0/35	35/0/35	10	1

CASE TYPE – Differential 1127, 1128

Dial Size (inches)	Case & Ring Material Finish	Bourdon Tube & Tip Material	Socket Material
4½, 6	Case: Aluminum Ring: Threaded aluminum All black epoxy coated	316 stainless steel	316 stainless steel

Pressure Range (psi)	Pointer	Movement	NPT Connection
10/1000	Adjustable	Bronze-brushed Overload & Vacuum Stops-Std.	¼ or ½ lower connect only

TO ORDER THESE 1127, 1128 DIFFERENTIAL PRESSURE GAUGES:

Select: 45 1127 SD 02L XXX 100#

1. Dial size–4½˝, 6˝
2. Case type–1127, 1128
3. Tube and socket material–(SD) Stainless
4. Connection size–¼ (02)
5. Connection location–Lower (L)
6. Optional features
7. Standard pressure range–1000 psi

Consult factory for guidance in product selection
Phone (203) 378-8281 or visit our
web site at www.ashcroft.com

MADE IN U.S.A.

ASHCROFT®

Differential Pressure Gauges
Type 1130
±2% Ascending Accuracy

- ***Piston actuator***
- ***Stainless steel case***
- ***Ranges from 5 psid-150 psid***
- ***Static pressures up to 6000 psi[5]***
- ***Aluminum[4], brass or stainless steel bodies[1]***
- ***Buna-N O-rings (others available)***
- ***Superior magnets for smoother pointer motion***
- ***Standard or explosion-proof reed switches available***
- ***5-year warranty***
- ***NEMA 4 / IP65***

The Type 1130 uses a piston design where small migration of the process media is permissible.[2] It is recommended for high differential and high static pressures, up to 6000 psi. Body materials are available in Aluminum, Brass and Stainless Steel, with Buna, Viton or EPDM seals.[3]

(1), (2) Not for use with incompatible media.
(3) Other wetted parts include stainless steel, Teflon and ceramic.
(4) Aluminum bodies not to be used with water or corrosive applications.
(5) Static pressure over 3000 psi in SS only.

SPECIFICATIONS	Type 1130
Accuracy (Ascending)	±2%
Migration	Minor
Range Limits	0-5 psid to 150 psid
Maximum Static Pressure	3000 psi (6000 psi for SS)
Actuator	Piston
Case Material	Stainless Steel
Dial Size	2″ (20), 2½″ (25), 3½″ (35), 4″ (40), 4½″ (45), 6″ (60)
Maximum Process Temperature	175°F / 80°C
Body Materials	Aluminum (F), Brass (A), Stainless Steel (S)
O-Rings	Buna-N
Connection Size (Female)	¼ NPT (25)
Connection Location	In-Line (S), Lower (L), Back (B)
Window	Glass
Warranty	Five Years
OPTIONS	
⅛ NPT Female Adapter (XGE)	Available
Switches[1,2] NEMA-4	Available
Front Flange (XFF)	Available
Viton Diaphragm/O-Rings (XVD)	Available
EPDM Diaphragm/O-Rings (XEM)	Available
Glycerin Fill (L)*	Standard Fill Option
Silicone Fill (XGV)	Available
Plastic Window (XPD)	Available
Explosion Proof (XEK)	Available[3]
Safety Glass (XSG) 3½″-6″ only	Available

*Liquid fill has an effect on accuracy that varies with range and temperature. Liquid filling may be required only in some very severe applications.

(1) Applicable to Switches
(XV1) 1 SPST with DIN Plug (XV5) 1 SPDT with DIN Plug
(XV2) 1 SPST with Terminal Strip (XV6) 1 SPDT with Terminal Strip
(XV3) 2 SPST with DIN Plug (XV7) 2 SPDT with DIN Plug
(XV4) 2 SPST with Terminal Strip (XV8) 2 SPDT with Terminal Strip

(2) Adjustable from 40-100% of range

(3) Specify lower or back connection for gauge (not available in-line or with 2″-2½″ dials) and switch type (terminal strip) XV2, XV4, XV6, XV8.

RATINGS FOR BOTH STANDARD & EXPLOSION PROOF SWITCHES:

SPST SWITCH

Specifications:
Contact Rating
10 VA ac (rms) or dc (max)
Switching Current
0.5 Amp ac (rms) or dc (max)
Switch Voltage
100 Vac/Vdc (max)

SPDT SWITCH

Specifications:
Contact Rating
3 VA ac (rms) or dc (max)
Switching Current
.3 Amp ac (rms) or dc (max)
Switch Voltage
30 Vac/Vdc (max)

EXPLOSION-PROOF SWITCH INFORMATION:

Switches and electrical connections are mounted in an explosion-proof enclosure with UL, CSA, Cenelec and FM approval. The enclosure meets Class 1, Groups B, C, D, Class 2 Groups E, F, G, Class 3, NEMA 7 & 9 and IP 66. Two ¾″ electrical conduit connections.

STANDARD RANGES – Type 1130

psi		0-5	0-8	0-10	0-15	0-20	0-25	0-30	
kPa	0-25		0-50	0-75	0-100		0-160	0-200	0-250
kg/cm²-bar	0-0.25		0-0.5	0-0.75	0-1		0-1.6	0-2	0-2.5

psi	0-40	0-50	0-60		0-80		0-100		150
kPa	0-300		0-400	0-500		0-600	0-700	0-900	0-1000
kg/cm²-bar	0-3		0-4	0-5		0-6	0-7	0-9	0-10

TO ORDER THIS 1130 DIFFERENTIAL PRESSURE GAUGES:

Select: **25** **1130** **F** **D** **25S** **XXX** **30#**

1. Dial size–2″, 2½″, 3½″, 4″, 4½″, 6″
2. Case type–1130
3. Body material
4. Dry (D) or Liquid Filled (L)
5. Connection size–¼ NPTF (25)
6. Connection location–In-line (S), Lower (L), Back (B)
7. Optional features–see above
8. Standard pressure range

Consult factory for guidance in product selection
Phone (203) 378-8281 or visit our
web site at www.ashcroft.com

ASHCROFT®

Differential Pressure Gauges
Type 1131
±2% Ascending Accuracy

- ***Rolling diaphragm actuator***
- ***Stainless steel case***
- ***Ranges from 5 psid-100 psid***
- ***Static pressures up to 3000 psi***
- ***Aluminum(3), brass or stainless steel bodies(1)***
- ***Buna-N O-rings (others available)***
- ***Superior magnets for smoother power motion***
- ***Standard or explosion-proof reed switches available***
- ***5-year warranty***
- ***NEMA 4 / IP65***

The Type 1131 is utilized for applications where migration of the process media is not permissible. The Type 1131 uses a rolling diaphragm design to separate the high and low-pressure ports to isolate the media and can see up to 3000 psi static pressures. Rolling diaphragm not designed to see reverse pressure. Body materials are available in Aluminum, Brass and Stainless Steel, with Buna, Viton or EPDM seals.(2)

(1) Not for use with incompatable media.
(2) Other wetted parts include stainless steel, Teflon and ceramic.
(3) Aluminum bodies not to be used with water or corrosive applications.

SPECIFICATIONS	Type 1131
Accuracy (Ascending)	±2%
Migration	Zero
Range Limits	0-5 psid to 100 psid
Maximum Static Pressure	3000 psi (all)
Actuator	Rolling Diaphragm
Case Material	Stainless Steel
Dial Size	2½˝ (25), 3½˝ (35), 4˝ (40), 4½˝ (45), 6˝ (60)
Maximum Process Temperature	175°F / 80°C
Body Materials	Aluminum (F), Brass (A), Stainless Steel (S)
Diaphragm/O-Rings	Buna-N
Connection Size (Female)	¼ NPT (25)
Connection Location	In-Line (S), Lower (L) Back (B)
Window	Glass
Warranty	Five Years
OPTIONS	
⅛ NPT Female Adapter (XGE)	Available
Switches(1,2) NEMA-4	Available
Front Flange (XFF)	Available
Viton Diaphragm/O-Rings (XVD)	Available
EPDM Diaphragm/O-Rings (XEM)	Available
Glycerin Fill (L)*	Standard Fill Option
Silicone Fill (XGV)	Available
Plastic Window (XPD)	Available
Explosion Proof (XEK)	Available(3)
Safety Glass (XSG) 3½˝-6˝ only	Available

*Liquid fill has an effect on accuracy that varies with range and temperature. Liquid filling may be required only in some very severe applications.

(1) Applicable to Switches
(XV1) 1 SPST with DIN Plug (XV5) 1 SPDT with DIN Plug
(XV2) 1 SPST with Terminal Strip (XV6) 1 SPDT with Terminal Strip
(XV3) 2 SPST with DIN Plug (XV7) 2 SPDT with DIN Plug
(XV4) 2 SPST with Terminal Strip (XV8) 2 SPDT with Terminal Strip

(2) Adjustable from 40-100% of range

(3) Specify lower or back connection for gauge (not available in-line or with 2˝-2½˝ dials) and switch type (terminal strip) XV2, XV4, XV6, XV8.

RATINGS FOR BOTH STANDARD & EXPLOSION PROOF SWITCHES:

SPST SWITCH

Specifications:
Contact Rating
10 VA ac (rms) or dc (max)
Switching Current
0.5 Amp ac (rms) or dc (max)
Switch Voltage
100 Vac/Vdc (max)

SPDT SWITCH

Specifications:
Contact Rating
3 VA ac (rms) or dc (max)
Switching Current
.3 Amp ac (rms) or dc (max)
Switch Voltage
30 Vac/Vdc (max)

EXPLOSION-PROOF SWITCH INFORMATION:

Switches and electrical connections are mounted in an explosion-proof enclosure with UL, CSA, Cenelec and FM approval. The enclosure meets Class 1, Groups B, C, D, Class 2 Groups E, F, G, Class 3, NEMA 7 & 9 and IP 66. Two ¾˝ electrical conduit connections.

STANDARD RANGES – Type 1131

psi		0-5	0-7	0-10	0-15	0-25	0-30		0-40	0-60	0-100
kPa	0-25		0-50	0-75	0-100		0-200	0-250		0-400	0-700
kg/cm²-bar	0-0.25		0-0.5	0-0.75	0-1		0-2	0-2.5		0-4	0-7

TO ORDER THIS 1131 DIFFERENTIAL PRESSURE GAUGES:

Select:	25	1131	F	D	25S	XXX	30#
1. Dial size–2½˝, 3½˝, 4˝, 4½˝, 6˝							
2. Case type–1131							
3. Body material							
4. Dry (D) or Liquid Filled (L)							
5. Connection size–¼ NPTF (25)							
6. Connection location–In-line (S), Lower (L), Back (B)							
7. Optional features–see above							
8. Standard pressure range							

Consult factory for guidance in product selection
Phone (203) 378-8281 or visit our
web site at www.ashcroft.com

ASHCROFT®

Differential Pressure Gauges
Type 1132
±2% Ascending Accuracy

- ***Small convoluted diaphragm actuator***
- ***Stainless steel case***
- ***Ranges from 1 psid-60 psid***
- ***Static pressures up to 1500 psi***
- ***Aluminum(3), brass or stainless steel bodies(1)***
- ***Buna-N seals (others available)***
- ***Superior magnets for smoother power motion***
- ***Standard or explosion-proof reed switches available***
- ***5-year warranty***
- ***NEMA 4 / IP65***

The Type 1132 uses a convoluted-diaphragm design with no migration of the process media. It is recommended for lower differential and high static pressures, up to 1500 psi. Body materials are available in Aluminum, Brass and Stainless Steel, with Buna, Viton or EPDM seals.(2)

(1) Not for use with incompatible media.
(2) Other wetted parts include stainless steel, Teflon and ceramic.
(3) Aluminum bodies not to be used with water or corrosive applications.

SPECIFICATIONS	Type 1132
Accuracy (Ascending)	±2%
Migration	Zero
Range Limits	0-1 psid to 60 psid
Maximum Static Pressure	1500 psi (all)
Actuator	Convoluted Diaphragm
Case Material	Stainless Steel
Dial Size	2½˝ (25), 3½˝ (35), 4˝ (40), 4½˝ (45), 6˝ (60)
Maximum Process Temperature	175°F / 80°C
Body Materials	Aluminum (F), Brass (A), Stainless Steel (S)
Diaphragm/O-Rings	Buna-N
Connection Size (Female)	¼ NPT (25)
Connection Location	In-Line (S), Lower (L) Back (B)
Window	Glass
Warranty	Five Years
OPTIONS	
⅛ NPT Female Adapter (XGE)	Available
Switches(1,2) NEMA-4	Available
Front Flange (XFF)	Available
Viton Diaphragm/O-Rings (XVD)	Available
EPDM Diaphragm/O-Rings (XEM)	Available
Glycerin Fill (L)*	Standard Fill Option
Silicone Fill (XGV)	Available
Plastic Window (XPD)	Available
Explosion Proof (XEK)	Available(3)
Safety Glass (XSG) 3½˝-6˝ only	Available

*Liquid fill has an effect on accuracy that varies with range and temperature. Liquid filling may be required only in some very severe applications.

(1) Applicable to Switches
(XV1) 1 SPST with DIN Plug (XV5) 1 SPDT with DIN Plug
(XV2) 1 SPST with Terminal Strip (XV6) 1 SPDT with Terminal Strip
(XV3) 2 SPST with DIN Plug (XV7) 2 SPDT with DIN Plug
(XV4) 2 SPST with Terminal Strip (XV8) 2 SPDT with Terminal Strip

(2) Adjustable from 40-100% of range

(3) Specify lower or back connection for gauge (not available in-line or with 2˝-2½˝ dials) and switch type (terminal strip) XV2, XV4, XV6, XV8.

RATINGS FOR BOTH STANDARD & EXPLOSION PROOF SWITCHES:

SPST SWITCH

Specifications:
Contact Rating
10 VA ac (rms) or dc (max)
Switching Current
0.5 Amp ac (rms) or dc (max)
Switch Voltage
100 Vac/Vdc (max)

SPDT SWITCH

Specifications:
Contact Rating
3 VA ac (rms) or dc (max)
Switching Current
.3 Amp ac (rms) or dc (max)
Switch Voltage
30 Vac/Vdc (max)

EXPLOSION-PROOF SWITCH INFORMATION:

Switches and electrical connections are mounted in an explosion-proof enclosure with UL, CSA, Cenelec and FM approval. The enclosure meets Class 1, Groups B, C, D, Class 2 Groups E, F, G, Class 3, NEMA 7 & 9 and IP 66. Two ¾˝ electrical conduit connections.

STANDARD RANGES – Type 1132

psi	0-1		0-5	0-8		0-15	0-20	0-25	0-30		0-40	0-50	0-60
in.H₂O	0-25	0-100		0-200		0-400	0-500						
kPa		0-25		0-50	0-75	0-100		0-160	0-200	0-250	0-300		0-400
kg/cm²-bar	0-0.075	0-0.25		0-0.5	0-0.75	0-1		0-1.6	0-2	0-2.5	0-3		0-4
mbar	0-75	0-250											

TO ORDER THIS 1132 DIFFERENTIAL PRESSURE GAUGES:

Select:	25	1132	F	D	25S	XXX	30#
1. Dial size–2½˝, 3½˝, 4˝, 4½˝, 6˝							
2. Case type–1132							
3. Body material							
4. Dry (D) or Liquid Filled (L)							
5. Connection size–¼ NPTF (25)							
6. Connection location–In-line (S), Lower (L), Back (B)							
7. Optional features–see above							
8. Standard pressure range							

Consult factory for guidance in product selection
Phone (203) 378-8281 or visit our
web site at www.ashcroft.com

ASHCROFT®

Differential Pressure Gauges
Type 1133
±2% Ascending Accuracy

- ***Large convoluted diaphragm actuator***
- ***Stainless steel case***
- ***Ranges from 1 IWD-25 IWD***
- ***Static pressures up to 500 psi***
- ***Aluminum(3), stainless steel bodies(1)***
- ***Buna-N seals (others available)***
- ***Superior magnets for smoother power motion***
- ***Standard switches available***
- ***5-year warranty***
- ***NEMA 4 / IP65***

The Type 1133 uses a convoluted-diaphragm to sense low inches of water differentials while ensuring no migration of the process media. Maximum static pressures for ranges of 5 IWD and below is 45 psi and 500 psi for all other ranges. Body materials are available in Aluminum or Stainless Steel with Buna, Viton or EPDM seals.(2)

(1) Not for use with incompatible media.
(2) Other wetted parts include stainless steel, Teflon and ceramic.
(3) Aluminum bodies not to be used with water or corrosive applications.

SPECIFICATIONS	Type 1133
Accuracy (Ascending)	±2%
Migration	Zero
Range Limits	0-1 IWD to 25 IWD
Maximum Static Pressure	500 psi (all)
Actuator	Convoluted Diaphragm
Case Material	Stainless Steel
Dial Size	3½″ (35), 4″ (40), 4½″ (45), 6″ (60)
Maximum Process Temperature	175°F / 80°C
Body Materials	Aluminum (F), Stainless Steel (S)
Diaphragm	Buna-N
Connection Size (Female)	¼ NPT (25)
Connection Location	In-Line (S), Lower (L), Back (B)
Window	Glass
Warranty	Five Years
OPTIONS	
⅛ NPT Female Adapter (XGE)	Available
Switches(1,2) NEMA-4	Available
Front Flange (XFF)	Available
Viton/Diaphragm (XVD)	Available
EPDM/Diaphragm (XEM)	Available
Glycerin Fill (L)	N/A
Silicone Fill (XGV)	N/A
Plastic Window (XPD)	Available
Explosion Proof (XEK)	N/A
Safety Glass (XSG) 3½″-6″ only	Available

(1) Applicable to Switches
(XV1) 1 SPST with DIN Plug (XV5) 1 SPDT with DIN Plug
(XV3) 2 SPST with DIN Plug (XV7) 2 SPDT with DIN Plug

(2) Adjustable from 40-100% of range

RATINGS FOR STANDARD SWITCHES:

SPST SWITCH

Specifications:
Contact Rating
10 VA ac (rms) or dc (max)
Switching Current
0.5 Amp ac (rms) or dc (max)
Switch Voltage
100 Vac/Vdc (max)

SPDT SWITCH

Specifications:
Contact Rating
3 VA ac (rms) or dc (max)
Switching Current
.3 Amp ac (rms) or dc (max)
Switch Voltage
30 Vac/Vdc (max)

STANDARD RANGES – Type 1133

in.H_2O	0-1	0-2	0-5	0-10	0-25
mmH_2O	0-25	0-50	0-125	0-250	0-600

TO ORDER THIS 1133 DIFFERENTIAL PRESSURE GAUGES:

Select:	35	1133	FD	25S	XXX	10IWD
1. Dial size–3½″, 4″, 4½″, 6″						
2. Case type–1133						
3. Body material						
4. Connection size–¼ NPTF (25)						
5. Connection location–In-line (S), Lower (L), Back (B)						
6. Optional features–see above						
7. Standard pressure range						

Consult factory for guidance in product selection
Phone (203) 378-8281 or visit our
web site at www.ashcroft.com

ASHCROFT®

Differential Pressure Gauges
Type 1134
±3% Ascending Accuracy

- ***Convoluted diaphragm actuator***
- ***Stainless steel case***
- ***Ranges from 0.6 IWD-60 IWD***
- ***Static pressures up to 35 psi***
- ***Glass filled nylon body(1)***
- ***Buna-N seals (others available)***
- ***Superior magnets for smoother power motion***
- ***Low cost reed switches available***
- ***5-year warranty***
- ***Flush mounting accessories standard***
- ***NEMA 4 / IP65***

The Type 1134 uses a convoluted-diaphragm design with no migration of the process media. It is recommended for low differential inches of water ranges. Body material is glass filled nylon with Buna or silicone.(2)

(1) Not for use with incompatible media.
(2) Other wetted parts include stainless steel, aluminum, Teflon and ceramic.

SPECIFICATIONS	Type 1134
Dial Size	4½″ (114mm)
Accuracy (Ascending)	3%
Range Limits	0-0.6 IWD to 60 IWD
Maximum Static Pressure	35 psi
Case Material	Stainless Steel
Body Material	Glass Filled Nylon
Diaphragm Actuator Material	Buna-N
O-Ring Material	Buna-N
Connection Size (Female)	⅛ NPT
Connection Location	Dual In-Line and Back (User chooses)
Window	Glass
Max. Process Temperature	140°F/60°C
Warranty	Five Years
OPTIONS	
Switches(1)(2) (NEMA-4)	Available
(XPD) Plastic Window	Available
(XBF) Surface Mount	Available
(XTM) Pipe Mounting Bracket	Available
(XEM) EPDM Seals/O-Rings	Available (3)

(1) Applicable to switches (NEMA- 4)
(XV1) 1 SPST with DIN plug
(XV3) 2 SPST with DIN plug
(XV5) 1 SPDT with DIN plug
(2) Adjustable from 40-80% of range
(3) Only with ranges up to 4IW

STANDARD RANGES		
Pressure – Single Scale (in.H_2O)		
Range*	Minor Grad.	First Grad.
0/0.6	.02	0.10
0/1	.02	.12
0/2	.04	.20
0/3	.10	.30
0/4	.10	.40
0/5	.10	.50
0/6	.20	.60
0/8	.20	.80
0/10	.25	1.0
0/15	.30	1.5
0/20	.50	2.0
0/25	.50	2.5
0/30	.60	3.0
0/40	.80	4.0
0/50	1.0	5.0
0/60	1.0	5.0

*Metric, dual or special ranges on application.

STANDARD ACCESSORIES
Two nylon 3⁄16″ hose barb tube adapters
Flush mounting kit
Two plugs for sealing connections not in use

RATINGS FOR STANDARD SWITCHES	
SPST SWITCH SPECIFICATIONS	
Contact Rating:	10 VA ac (rms) or dc (max)
Switch Current:	0.5 Amp ac (rms) or dc (max)
Switch Voltage:	100 Vac/Vdc (max)
SPDT SWITCH SPECIFICATIONS	
Contact Rating:	3 VA ac (rms) or dc (max)
Switch Current:	.3 Amp ac (rms) or dc (max)
Switch Voltage:	30 Vac/Vdc (max)

TO ORDER THIS 1134 DIFFERENTIAL PRESSURE GAUGES:

Select: **45** **1134** **ED** **RQM** **XXX** **1 IWD**

1. Dial size– 4½″
2. Case type–1134
3. Body material (Glass filled Nylon)
4. Connection size–⅛ NPTF (RQ)
5. Connection location–Dual In-line and Back (M)
6. Optional features–see above
7. Standard pressure range

Consult factory for guidance in product selection
Phone (203) 378-8281 or visit our
web site at www.ashcroft.com

ASHCROFT®

Type 5503
Differential Pressure Gauge

- ***±1.6% full scale accuracy***
- ***Stainless steel case***
- ***Stainless steel wetted parts***
- ***1450 psi static pressure standard with optional static pressure to 3625 psi***
- ***External zero adjust***
- ***Optional liquid-filled case***
- ***4˝ (100mm) or 6˝ (160mm) dial sizes***
- ***One sided load permitted***
- ***Optional ATEX approval***
- ***Meets NACE with Hastelloy C wetted parts***

The Ashcroft® Type 5503 differential pressure gauge is available with ranges from 16 I.W.D. to 400 psi with optional static pressure to 3625 psi. Optional wetted parts includes Hastelloy C & Monel. Typical applications include use with liquified gas for nitrogen, helium, argon and carbon dioxide.

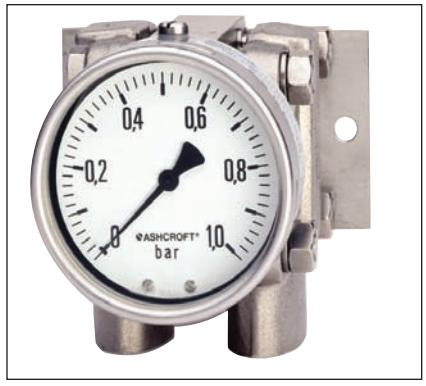

PRODUCT SPECIFICATIONS

GENERAL DIFFERENTIAL PRESSURE MEASUREMENT SPECIFICATIONS

Accuracy
±1.6% full scale

Dial Size
4˝ (100mm) or 6˝ (160mm)

Case and Ring
304 SS safety design case with bayonet ring (316 stainless steel case and ring optional)

Dial
White painted aluminum

Pointer
Black painted aluminum with external adjust feature standard (to 25% of range)

Window
Shatterproof glass

Diaphragm Material
316 stainless steel for ranges 5 psi and below. High strength cobalt alloy (Duratherm 600) for ranges of 5 psi and above.

Housing Material
316 stainless steel with a Viton O-ring

Socket Material
316 stainless steel

Socket Connection
1/4 NPT or 1/2 NPT lower Flange for direct mounted valves

Range
0-16 IWD (inches of water differential) to 400 psid

Static Pressure
1450 psi standard with optional static pressure to 3625 psid

Mounting
Stem, wall or pipe

Options

	Code
Glycerin fill	(L)
Silicone fill	(XGV)
Weatherproof/Hermetically sealed case	(XLJ)
Wall mounting bracket	(XFW)
Pipe mounting bracket	(XTM)
3-way manifold	(X43)
Hastelloy C diaphragm w/316 stainless steel housing(1,2)	(HS)
Monel diaphragm w/316 stainless steel housing(2)	(PS)
Hastelloy C diaphragm and housing(1,2)	(HH)
See page 247 for selection and ordering code	
Electric warning contacts 1/2% full scale accuracy (unidirectional upscale)	(XAJ)
Static pressure to 3625 psi	(XSP)
Polycarbonate window	(XPD)

(1) For ranges 5 psid and above.
(2) Goes in 3 and 4 spot below for coding.
Viton® is a registered trademark of DuPont Co.

STANDARD RANGES*

psid	mbar	bar	I.W.D.
3	40	0.6	16
5	60	1.0	30
10	100	1.6	60
15	160	2.5	100
30	250	4	200
60	400	6	
100		10	
160		16	
200		25	
300			
400			

*Other ranges on application

TO ORDER THIS MODEL 5503 DIFFERENTIAL PRESSURE GAUGE:

10	5503	S	S (L)	02L	XXX	0/100 psid

Select:

1. Dial size – 100mm, 160mm
2. Type
3. 316 SS diaphragm
4. 316 SS housing and socket (L) liquid filled
5. Connection size and location
6. Optional features
7. Pressure range

Consult factory for guidance in product selection
Phone (203) 378-8281 or visit our
web site at www.ashcroft.com

ASHCROFT®

Type 5509
Differential Pressure Gauges

- ***±2.5% full scale accuracy***
- ***Stainless steel case***
- ***316 stainless steel wetted parts***
- ***Inches of water differential ranges***
- ***Static pressure for ranges 160IW & lower – 145 psi above 160IW – 360 psi***
- ***External zero adjust***
- ***Available with open or solid front case styles***
- ***Optional liquid-filled case***
- ***4˝(100mm) or 6˝(160mm) dial sizes***

The Ashcroft® Type 5509 differential pressure gauge comes standard with 316SS wetted parts. This rugged gauge features an external zero adjust feature standard. Static pressure up to 360 psi.

PRODUCT SPECIFICATIONS

GENERAL DIFFERENTIAL PRESSURE MEASUREMENT SPECIFICATIONS

Accuracy
±2.5% full scale

Dial Size
4˝(100mm) or 6˝(160mm)
Zero adjust at top of case

Case and Ring
304 stainless steel open front case with a bayonet ring (solid front optional)

Dial
White painted aluminum with black markings

Pointer
Black painted aluminum with external adjust feature standard (to 25% of range)

Window
Shatterproof glass

Wetted Parts
Bellows 316 SS
Diaphragm Material
316 stainless steel for ranges 15 psi and below. High strength cobalt alloy (Duratherm 600) for ranges above 15 psi.

Housing Material
316 stainless steel with a Viton O-ring

Socket Connection
$^1/_4$ NPT or $^1/_2$ NPT lower

Range
0-10 IWD (inches of water differential) to 400 psid

Static Pressure
From 10 IWD to 3 psi – static pressure 145 psi
5 psi and above – static pressure 360 psi

Mounting
Stem, wall or pipe

Ingress Protection
IP54 (digital), IP65 (liquid filled), optional IP65 (dry case)

Options

	Code
Glycerin fill	(L)
Silicone fill	(XGV)
Weatherproof/Hermetically sealed case (IP65)	(XLJ)
Wall mounting bracket	(XFW)
Pipe mounting bracket	(XTM)
3-way manifold(1)	(X43)
Electric warning contacts See page 267 for selection and ordering code	
Polycarbonate window	(XPD)
Solid front	(S)

(1) Requires additional piping (not supplied).
Viton® is a registered trademark of DuPont Co.

STANDARD RANGES*

psid	mBar	bar	I.W.D.
3	25	0.6	10
5	40	1.0	30
10	60	1.6	60
15	100	2.5	100
30	160	4	200
60	250	6	
100	400	10	
160		16	
200		25	
300			
400			

*Other ranges on application

MEASURING PRINCIPLE

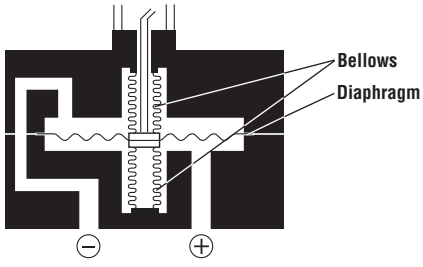

TO ORDER THIS MODEL 5509 DIFFERENTIAL PRESSURE GAUGE:

10	5509	S		02L	XXX	0/100 psid

Select:

1. Dial size – 100mm, 160mm
2. Type
3. 316 SS diaphragm, housing and socket
4. For solid front option add (S), otherwise leave blank
5. Connection size and location
6. Optional features
7. Pressure range

Consult factory for guidance in product selection
Phone (203) 378-8281 or visit our
web site at www.ashcroft.com

ASHCROFT®

Special Application Gauges
Type 1150H, ASME B40.100 Grade 2A (±0.5% of span)
Type 1122, ASME B40.100 Grade A (±2-1-2% of span)

1150H Reid Vapor Test Gauge

- ***Accuracy ASME B40.100 Grade 2A (±0.5% of span)***
- ***Dial size 4½" only***
- ***White dial and black pointer***

The Ashcroft® Type 1150H is a specialized pressure gauge used by the petroleum industry to measure vapor pressures of various petroleum products.

1122KE/KF

- ***Accuracy ASME B40.100 Grade 1A (1% FS)***
- ***Dial size 2½˝ only***

The Ashcroft® Type 1122 is a specialized product used for some pump, turbine and compressor applications.

SPECIFICATIONS

Gauge Type Number	Dial Size (Inches)	Case & Ring Material Finish	Bourdon Tube & Tip Material (all joints welded)	Socket Material	Pressure Range (psi)	Pointer	Movement	NPT Conn.
Reid Vapor Test 1150H	4½	Case: Aluminum Ring: Threaded Aluminum black epoxy coated	Phosphor Bronze Tip: Brass (All joints silver brazed)	Brass	15/600	Micrometer Adjustable	Stainless steel Teflon coated, pinion and sector shaft, rotary geared	¼
1122KE(1) 1122KF	2½	Case: Stainless steel Ring: Bayonet Lock, St.St. Both polished	316L SS	Bronze	15/1000	Non adjustable	Stainless steel	¼

TYPE 1150H

Range kg/cm² kilograms per sq. cm.	Range bar	Dial Graduations Major Interval	Dial Graduations Minor Graduation
0/1	0/1	0.1	0.01
0/1.6	1.6	0.2	0.02
0/2.5	2.5	0.5	0.05
0/4	0/4	0.5	0.05
0/6	0/6	0.5	0.1
0/10	0/10	1	0.1
0/16	0/16	2	0.2
0/25	0/25	5	0.5
0/40	0/40	5	0.5

Range kPa (kilopascal)	Dial Graduations Major Interval	Dial Graduations Minor Graduation
0/100	10	1
0/160	20	2
0/250	50	5
0/400	50	5
0/600	50	10
0/1000	100	10
0/1600	200	20
0/2500	500	50
0/4000	500	50

(1) The 1122KE is stem mounted.
The 1122KF is surface mounted with a back flange.

TYPE 1122

Range kg/cm² kilograms per sq. cm.	Range bar	Dial Graduations Major Interval	Dial Graduations Minor Graduation
0/1	0/1	0.1	0.01
0/1.6	0/1.6	0.2	0.02
0/2.5	0/2.5	0.5	0.05
0/4	0/4	0.5	0.05
0/6	0/6	0.5	0.1
0/10	0/10	1	0.1
0/16	0/16	2	0.2
0/25	0/25	5	0.5
0/40	0/40	5	0.5
0/60	0/60	5	1
Compound			
–1/0/1.5	-1/0/1.5	.5	.05
–1/0/3	-1/0/3	.5	.05
–1/0/5	-1/0/5	.5	.1

Range kPa (kilopascal)	Dial Graduations Major Interval	Dial Graduations Minor Graduation	Dial Graduations Dual-Scale psi
0/100	10	1	0/14
0/160	20	2	0/22
0/250	50	5	0/35
0/400	50	5	0/55
0/600	50	10	0/85
0/1000	100	10	0/140
0/1600	200	20	0/220
0/2500	500	50	0/350
0/4000	500	50	0/550
0/6000	500	100	0/850
Compound			
–100/0/300	50	5	30˝Hg/40
–100/0/500	50	50	30˝Hg/70

STANDARD RANGES

Range psi	Major Interval	Minor Graduation
Type 1150H		
0/15	1	0.1
0/30	2	0.2
0/45	3	0.2
0/60	4	0.25
0/100	5	0.5
0/200	10	1
0/250	10	1
0/300	10	2
0/600	20	2
Type 1122		
0/15	5	1
0/30	10	2
0/60	15	5
0/100	20	10
0/160	40	10
0/200	50	10
0/300	100	25
0/400	100	25
0/600	150	50
0/1000	250	50

TO ORDER THESE 1150H & 1122 GAUGES:

Select:	45	1150	H	02L	XXX	600#

1. Dial size–2½˝, 4½˝
2. Type
3. Tube and socket material–see chart above
4. Connection size–¼ (02)
5. Connection location–Lower (L) only
6. Optional features
7. Standard pressure range 600 psi

Accessories–see pages 267-268

Consult factory for guidance in product selection
Phone (203) 378-8281 or visit our
web site at www.ashcroft.com

ASHCROFT®

Low Pressure Bellows Gauge
Type 1187, 1188 & 1189
ASME B40.100 Grade A
(±2-1-2% of span)

- ***Available in 4½˝ and 6˝ dial sizes***
- ***Bellows-actuated mechanism***
- ***Three bellows materials***
- ***Easily adjustable micrometer pointer***
- ***Phenolic (1188) or aluminum (1187, 1189) cases***
- ***All-stainless steel movements***

Ashcroft® bellows gauges are used for measuring low pressures from 10 in. H_2O to 10 psi pressure as well as vacuum and compound ranges. Coupled with their sensitivity, these gauges have a rugged design for process and industrial applications.

PRESSURE RANGES[2,4]

STANDARD			METRIC	
Single Scale Dial Compound	Dual Scale Dial Pressure		Single Scale Dial Pressure	Dual Scale Dial Pressure
(Vac/Press) in.H_2O	Inner in.H_2O	Outer oz/in^2	mmH_2O	Outer Scale in.H_2O
–5/5	0/10	0/6	0/250	0/10
–10/10	0/15	0/9	0/400	0/16
–30/10	0/20	0/12	0/600	0/24
–20/20	0/30	0/18	0/1000	0/40
–40/20	0/40	0/24	0/1600	0/60
–10/30	0/60	0/35	0/2500	0/100
–30/30	0/80	0/45	0/4000	0/160
–70/30	0/100	0/57	0/6000	0/240
–20/40	0/150	0/90		
–50/50			**Vacuum**	**Vacuum**
in.Hg/psi	**psi**	**in.Hg**	–250/0	–10/0
–5/3	0/5	0/10	–400/0	–16/0
–2/5	0/8	0/16	–600/0	–24/0
–5/5	0/10	0/20	–1000/0	–40/0
–10/5			–1600/0	–60/0
	Vacuum		–2500/0	–100/0
	in.H_2O	**mmHg**	–4000/0	–160/0
	10/0	18/0	–6000/0	–240/0
	15/0	28/0	**Compound**	**Compound**
	20/0	37/0	–125/125	–5/5
	30/0	56/0	–200/200	–8/8
	40/0	75/0	–300/300	–12/12
	60/0	110/0	–500/500	–20/20
	80/0	150/0	–800/800	–30/30
	100/0	180/0	–1250/1250	–50/50
	150/0	270/0	–2000/2000	–80/80
	in.Hg	**ftH_2O**	–3000/3000	–120/120
	10/0	11/0		
	15/0	17/0		
	20/0	23/0		

CASE SELECTION

Dial Size	Case Type	Case Material	Ring Style	Mounting
4½˝	1187	Aluminum, black epoxy coated	Hinged steel, black crinkle enamel	Flush — back only
4½˝	1188	Phenolic, black	Threaded polypropylene ring	Stem — lower or back Surface — lower or back Flush— back, order 1278M mounting ring, specify X56
4½˝, 6˝	1189	Aluminum, black epoxy coated	Threaded polypropylene ring	Stem — lower Surface — lower

BELLOWS SYSTEM/RANGE SELECTION[1]

Order Code	Bellows & Socket Material	Pressure Range	Vacuum Range	Compound Range	NPT Conn.	Available Case Size and Type
A	Brass	10 in.H_2O to 10 psi	10 in.H_2O to 20 in.Hg	Minimum 5 in. H_2O vac / 5 in. H_2O Maximum 10 in. H_2O vac / 5 psi	¼, ½	4½˝–1187 4½˝–1188 4½˝, 6˝–1189[3]
S	316 SS	10 in.H_2O to 10 psi	10˝H_2O to 20 in.Hg		¼, ½	4½˝–1187 4½˝–1188 4½˝, 6˝–1189[3]
P	Monel	10 in.H_2O to 10 psi	10˝H_2O to 20 in.Hg		¼, ½	4½˝–1187 4½˝–1188 4½˝, 6˝–1189[3]

(1) For selection of the correct bellows system material, see the media application table on page 271 or the Corrosion Guide.
(2) Others ranges available: Consult factory.
(3) 6˝ case lower connect only.
(4) Dual scale standard. If single scale is required, specify "single scale only."

TO ORDER THIS 1188, 1187 OR 1189 PRESSURE GAUGE:

Select: **45** **1188** **AS*** **02L** **XXX** **10 IW**

1. Dial size–4½˝ & 6˝ — 45
2. Case type–1188, 1187, 1189 — 1188
3. Bellows and socket material — AS*
4. Connection size – ¼˝ (02), ½˝ (04) — 02L
5. Connection location – Lower (L), Back (B) — 02L
6. Optional features – see page 267-268 — XXX
7. Standard pressure range –10 in.H_2O — 10 IW

Accessories – see pages 261-266

* "S" Denotes solid-front case design.

Consult factory for guidance in product selection
Phone (203) 378-8281 or visit our
web site at www.ashcroft.com

ASHCROFT®

Low Pressure Diaphragm Gauge Series 1490, ASME B40.100 Grade A (±2-1-2% of span)

- ***2½˝ and 3½˝ dial size***
- ***Glass-filled polysulfone case material, won't rust or dent***
- ***Beryllium copper diaphragm***
- ***Brass socket***
- ***Wetted materials of beryllium copper, brass, polysulfone and RTV silicone***
- ***IP 54***

The Ashcroft® Type 1490 low pressure diaphragm gauge is designed to measure pressure from 10 in.H_2O to 15 psi, both positive and negative pressures. This gauge uses a very sensitive diaphragm capsule to measure low pressure and vacuum. The gauge is specifically designed for use whenever the pressure medium is a gas that is not corrosive to beryllium copper, brass, polysulfone and RTV silicone. The polysufone case is suitable for intermittent or continuous service on natural gas provided a .013˝ throttle plug is installed in the socket. Typical applications are, but not limited to, vacuum pumps, gas leak detectors, air compressors, air filters, gas burners, gas measurement, vacuum ovens, suction regulators and respirators.

SELECTION TABLE

DIAL SIZE		TYPE		WETTED MATERIAL		CONN. SIZE & TYPE		CONNECTION LOCATION		RANGES		OPTIONAL FEATURES	
Code	Desc.	Code	Description	Code	Description	Code	Description	Code	Description	Code	Description	Code	Description
25 35	2½˝ 3½˝	1490	Low Pressure Diaphragm gauge	A	Beryllium Copper Brass Polysulfone RTV silicone	01 02 HD HE HF HG HH	⅛ NPT ¼ NPT ⅛˝ I.D.Tubing Hose Barb(2,3) 3/16˝ I.D.Tubing Hose Barb(2,3) ¼˝ I.D.Tubing Hose Barb(2,3) ¼˝ O.D. Polytube Hose Barb(2,3) 10-32-2B Female Thread(2,3,4)	L B T D E	Lower Center Back Top 3 O'Clock 9 O'Clock	10 IW	0 to 10 in.H_2O See Chart for Entire List of Ranges	XAN XDA XNH XNN XTU(1,3) XTS(4) XUC(2) XZY	1% Opt. Accuracy Dial Marking Stain. Steel Tag Paper Tag Throttle Plug Throttle Screw U-clamp FlutterGuard™

(1) A throttle plug must be installed in the socket whenever the gauge is used for intermittent or continuous service on natural gas.
(2) U-clamp furnished when hose barb or female thread is specified. **EXAMPLES: 25 1490A 02L 10 IW XNH**
(3) Throttle plug not available with hose barb or female thread connections.
(4) .020 throttle screw available with HH connection only.

STANDARD RANGES

Pressure	Figure Intervals	Minor Graduation
0/10 in.H_2O	1	0.1
0/15 in.H_2O	5	0.2
0/30 in.H_2O	5	0.5
0/60 in.H_2O	10	1
0/100 in.H_2O	10	1
0/160 in.H_2O	20	2
0/200 in.H_2O	20	2
0/300 in.H_2O	50	5
0/10 oz./in.^{2}	1	0.1
0/15 oz./in.^{2}	5	0.2
0/30 oz./in.^{2}	5	0.5
0/60 oz./in.^{2}	10	1
0/100 oz./in.^{2}	10	1
0/160 oz./in.^{2}	20	2
0/250 oz./in.^{2}	50	5
0/3 psi	0.5	0.05
0/5 psi	1	0.1
0/10 psi	1	0.1
0/15 psi	5	0.2

STANDARD RANGES (Cont.)

Vacuum	Figure Intervals	Minor Graduation
15/0 in.H_2O	5	0.2
30/0 in.H_2O	5	0.5
60/0 in.H_2O	10	1
100/0 in.H_2O	10	1
200/0 in.H_2O	20	2
15/0 oz./in.^{2}	5	0.2
30/0 oz./in.^{2}	5	0.5
60/0 oz./in.^{2}	10	1
100/0 oz./in.^{2}	10	1
Compound		
–30/30 in.H_2O	10	1
–30/30 in.oz./in.^{2}	10	1
–10/10 in.H_2O	2	0.2
Dual Scale		

Range		Graduations			
		Inner Scale		Outer Scale	
Inner Scale	Outer Scale	Figure Intervals	Minor Grad.	Figure Intervals	Minor Grad.
0/9 oz./in.^{2}	0/15 in.H_2O	1	0.2	5	0.2
0/20 oz./in.^{2}	0/35 in.H_2O	5	0.5	5	0.5
0/35 oz./in.^{2}	0/60 in.H_2O	5	0.5	10	1
0/60 oz./in.^{2}	0/100 in.H_2O	10	1	10	1

Other ranges available on request. Consult factory.

STANDARD METRIC RANGES

Pressure	Figure Intervals	Minor Graduation
0/60 cm. H_2O	10	1
0/2.5 kPa	0.5	0.05
0/4 kPa	1	0.1
0/10 kPa	1	0.1
0/16 kPa	2	0.2
0/25 kPa	5	0.5
0/40 kPa	10	1
0/100 kPa	10	1
Vacuum		
2.5/0 kPa	0.5	0.05
4/0 kPa	1	0.1
10/0 kPa	1	0.1
16/0 kPa	2	0.2
25/0 kPa	5	0.5
40/0 kPa	10	1
100/0 kPa	10	1
Compound		
–10/60 cm H_2O	10	1
–10/80 cm H_2O	10	1
–20/40 cm H_2O	10	1
–10/100 cm H_2O	10	1
–10/120 cm H_2O	20	2

TO ORDER THESE LOW PRESSURE DIAPHRAGM GAUGES:

Select:	25	1490	A	02L	XXX	10 IW

1. Dial size – 2½ (25), 3½ (35)
2. Case type
3. Wetted material
4. Connection size – ¼ (02), ⅛ (01)
5. Connection location – Lower (L), Back (B)
6. Optional features – see page 267-268
7. Standard pressure range – 10 in.H_2O

Consult factory for guidance in product selection
Phone (203) 378-8281 or visit our
web site at www.ashcroft.com

ASHCROFT®

Diaphragm Receiver Gauges
Type 1495, ASME B40.100
Grade A (±2-1-2% of span)

- ***Sensitive diaphragm element results in smooth pointer motion***
- ***One-piece polycarbonate window is easy to remove***
- ***Re-zero screw allows easy pointer adjustment***
- ***Slotted U-clamp for panel mounting makes installation easy***

The Ashcroft® Type 1495 receiver gauge uses a diaphragm capsule as its sensing element rather than a Bourdon tube. The sensitivity of the diaphragm promotes smooth pointer motion that makes minor pressure changes easy to read.

The Type 1495 receiver gauge is the ideal product where the standard ASME B40.100 Grade A (±2-1-2% of span) accuracy or the optional ASME B40.100 Grade 1A (±1% of span) accuracy and smaller dial sizes are specified. The long pointer, smooth-operating sensing element, easily removable window and re-zero adjustment screw make specification and installation of this receiver gauge quick and easy. The polysulfone case is suitable for intermittent or continuous service on natural gas provided a .013˝ throttle plug is installed in the socket.

SPECIFICATIONS

Dial Size		Gauge Type		Wetted Material		Connection Size & Type		Connection Location	
Code	Desc.	Code	Description	Code	Description	Code	Description	Code	Description
25	2½˝	1495	Diaphragm Receiver Gauge	A	Beryllium Copper	01	⅛ NPT	L	Lower
35	3½˝				Brass	02	¼ NPT	B	Center Back
					Polysulfone	HD	⅛˝ I.D. Tubing Hose Barb(2,3)	T	Top
					RTV Silicone	HE	3/16˝ I.D. Tubing Hose Barb(2,3)	D	3 O'Clock
						HF	¼˝ I.D. Tubing Hose Barb(2,3)	E	9 O'Clock
						HG	¼˝ O.D. Polytube Hose Barb(2,3)		
						HH	10-32-2B Female Thread(2,3,4)		

(1) A throttle plug must be installed in the socket whenever the gauge is used for intermittent or continuous service on natural gas.
(2) U-clamp furnished when hose barb or female thread is specified.
(3) Throttle plug not available with hose barb or female thread connections.
(4) .020 throttle screw available on HH connection only.

RANGES

Pressure	Figure Intervals	Minor Graduations
0-100%	10	1
0-10 sq rt	1	0.1
0-10 sq rt/0-100 Linear (5)		

(5) This dial is standard and will be supplied unless otherwise ordered. Figure/minor intervals same as single case.

SPECIFICATIONS

Dial Size: 2½˝ and 3½˝

Case Material: Glass-filled polysulfone

Sensing Element: Beryllium copper diaphragm

Wetted Materials: Beryllium copper, brass, polysulfone and RTV silicone

OPTIONS

Code	Description
XAN	1% optional accuracy
XDA	Dial marking
XNH	Stainless steel tag
XNN	Paper tag
XTU(1,3)	Throttle plug
XTS(4)	Throttle screw
XUC(2)	U-clamp
XZY	FlutterGuard™

TO ORDER THIS TYPE 1495 RECEIVER GAUGE:

Select: 35 1495A 02 B XUC 3-15 psi Range

1. Dial size – 3½˝
2. Case type – 1495 and wetted material
3. Connection size – ¼ (02), ⅛ (01)
4. Connection location – Lower (L), Back (B)
5. Variation for U-clamp
6. Basic model code for 3-15# signal
7. Actual dial range required; i.e, 0-100%, 0-10 sq rt, etc.

Consult factory for guidance in product selection
Phone (203) 378-8281 or visit our
web site at www.ashcroft.com

ASHCROFT®

General Purpose Digital Gauge
Type DG25, ±½% of Span
Terminal Point Accuracy

- ***0.5% terminal point accuracy (0.25% optional)***
- ***Five-digit LCD display with large .48˝ character size***
- ***Bar graph display (20 segment)***
- ***Nine engineering units of measure plus one user programmable unit***
- ***Capable of measuring gauge, vacuum and compound ranges from –14.7 psi through 25,000 psi***
- ***IP67 weatherproof enclosure***
- ***CE compliant, RoHs compliant, UL and cUL 61010-1***
- ***The versatile and economical choice for a wide variety of applications***

The Ashcroft® DG25 series offers 0.5% of span accuracy. Laser-welded stainless steel sensor and socket make this product suitable for use with a wide variety of pressure media in demanding industrial applications. This series is also available with enhanced accuracy of 0.25% of span making it suitable for many test and measurement uses.

IP67 ingress protection rating means the DG25 is suitable for demanding applications such as equipment wash down.

The DG25 comes standard with many features such as: tare, min and max memory, programmable custom engineering units, and pressure ranges from vacuum to 25,000 psi.

*Shown with Optional Protective Boot & Back Light

PRODUCT SPECIFICATIONS

Accuracy:	0.5% F.S. standard, 0.25% optional includes effects of linearity, hysteresis and repeatability
LCD Display:	Five-digit numeric top line, five-character alphanumeric lower line, 20 segment vertical bar graph, four-segment battery life indicator, dedicated icons for gauge timer, back light timer, tare, min and max
Character Height:	Upper line 0.48˝ (12.19mm,) Lower line 0.24˝ (6.10mm)
View Angle:	12 o'clock
Backlight:	Optional
Engineering Units:	psi, bar, inHg, cmHg, mmHg, kPa, mPa, kg/cm2, ftH2O, and customer defined unit
Ranges:	45 standard psi and bar ranges from –14.7 to 25000 psi, gauge, vacuum and compound ranges available.
Enclosure Matl.:	Case & Back: Polycarbonate/ABS Window: Polycarbonate
Enclosure Rating:	IP67
Protective Boot:	Optional (Black or Orange)
Serial No.:	Yes
Nominal Size:	2.73˝ (70mm) dia.; 1.61˝ (40.9mm) deep; 2.64˝ (67mm) centerline to end of ¼ NPT thread height
Wetted Matl.:	17-4 ph sensor & 316L socket, laser welded
Connection:	¼ NPT lower standard, Options ⅛ NPT, G ¼ B, others consult factory; 6 o'clock (lower) position standard
Battery:	Two AA alkaline batteries
Battery Life:	2000 hours minimum
Battery Indicator:	4 levels
Cycle Life:	10 million cycles
Vibration:	MIL-STD-202G, Method 201A
Shock:	MIL-STD-202G, Method 213B, Test Condition K
Operating Temp:	–4°F to 140°F, (–20°C to 60°C) ambient temp.; –4°F to 176°F, (–20°C to 80°C) process media temp
Storage Temp:	Batteries Installed: –4°F to 140°F, (–20°C to 60°C) Batteries Removed: –4°F to 176°F, (–20°C to 80°C)
Temp. Coef.:	0.04%/°F (–20°F to 180°F) zero and span. Reference Temp. 70°F
Leak Integrity:	10-7 std. cc/sec.
Update Rate:	1Hz, 2Hz, 4Hz,
Keypad Functions:	Three key; available with multi press functionality
Hard Keys:	on/off; Power Symbol and Enter zero; Zero, Tare, and Up Arrow menu Access, Backlight, Down Arrow
Agency Approvals:	CE (heavy industrial), ASME B40.7, RoHs, UL 61010/ cUL
Proof Pressure: % of Span	Vac – 2000: 200% 3000 – 5000: 150% 7500 – 25,000: 120%
Burst Pressure: % of Span	Vac – 2000: 800% 3000 – 5000: 500% 7500 – 25,000: 300%
Options:	**XB3** Pouch with Logo **X6B** Cleaned with Oxygen Service **XC4** Individual Calibration Chart **XNH** Wired SS Tag

TO ORDER THIS TYPE DG25 GAUGE:

Select:	25	DG25	5	1	L	1	N/AM02	L	3000#	–	XB3

1. Dial Size: 2½˝
2. Case Type Number: DG25
3. Accuracy: (3) 0.25%, (5) 0.50%
4. Type: (1) Battery
5. Backlight: (L), (N) Not Applicable
4. Protective Boot: (0) None, (1) Black, (2) Orange
5. Electrical Connection: (N/A)
6. Connection Size: (M01), (M02), (MG2), (MGA), (F09),
7. Connection Location: (L)
8. Range: 15 psi-25,000 psi
9. Options: (XB3), (X6B), (XC4), (XNH)

Consult factory for guidance in product selection
Phone (203) 378-8281 or visit our
web site at www.ashcroft.com

SANITARY PRESSURE GAUGES

Type 2030 Digital Sanitary Gauge 121
Type 1032, 2½˝, 3½˝ and 4½˝ Gauge 122
Type 1036 3½˝ Gauge
w/Type 1037 Sanitary Fitting 123
Type 1032, 2˝ Fractional Gauge.....124
Options for Process, Stainless Steel,
Test and Industrial Pressure Gauges.....125

ASHCROFT®

Type 2030 Series
Digital Sanitary Gauge 3˝

AT LAST, A MULTI-FUNCTIONAL SANITARY GAUGE FROM THE EXPERTS IN PRESSURE MEASUREMENT

The Ashcroft® sanitary digital gauge saves money, time and space. Now, one digital pressure gauge can replace three instruments . . . a mechanical pressure gauge, a transducer and a switch! Save space, installation costs and the cost of additional instruments and pipe cut-outs.

Features

- 4/20mA Output (optional)
- (1) or (2) SPDT Switches (optional)
- .25% F.S. Terminal Point Accuracy
- IP 65 Weatherproof Case Suitable For Wash Downs
- Large Display
- Easy-to-Use Password Protected Menu With:
  - 5 Backlite Display Options
  - 12 Engineering Units
  - Menu Configure Feature
  - Update Rate
  - Dampen Rate
  - Auto-Off
- Material Traceability Certification to EN 10204: 2004 3.1†

†Excludes 2036 Series

SPECIFICATION

Type:
Conventional Tri-clamp: 2032 (battery), 2132[1] loop (4-20mA, 12-36 Vdc) 2232[1] line (12-36 Vdc)
In-line Tri-clamp: 2036 (battery), 2136 (12-36 Vdc), 2232 line (12-36 Vdc)
Accuracy: Terminal point
Full Scale: .25% F.S. accuracy
Case Size: 3˝
Case Material/Finish: (3˝) 300 series SS, Electropolished
Case Enclosure Rating: Weatherproof, IP65, NEMA 4
Wetted Parts: 316 SS
Fill Fluid: Glycerine standard, Food Grade Silicone (XCZ), Food Grade Mineral Oil (XMY)
Tri-Clamp Connection: Direct, in-line 1½ ˝, 2 ˝, Ashcroft remote in-line (XRE),
Seal Surface Finish: 12-20Ra
Connection Location: Lower
Ranges: 15 psi thru 1,000 psi including metric, compound & vac
Process Temp. Limits(2): 14°F / 275°F (–10°C / 135°C) to withstand clean in place (CIP) & steam in place (SIP)
Ambient Temp. Limits(3): 14°F / 140°F (–10°C / 60°C)
Temperature Error: ±.22% per 10°F, (12°F) (Span and Zero shift can be eliminated by rezeroing the gauge at operating temperatures. Temperatures must be within process temperature limits)
Storage Temperature: –4°F / 158°F (–20°C / 70°C)
Overrange Pressure: 2x range of gauge

DISPLAY

Type: LCD
Display Digits: 5 digits
Character Height: .60˝
Backlite: Off by default (optional)
Bar Graph: Yes
Battery Life: 500 Hrs., Battery Life Indicator – standard
Agency Approvals: CE (excludes XRE variation) Material Traceability Certification to EN 10204: 2004 3.1 standard ASME B40.7

KEYBOARD FUNCTIONS

On/Off: Manually turns unit on & off (auto off options in menu)
Zero/Clear: Zeros display or clears min/max values when displayed
Min/Max Arrow Key: Stores min & max values, arrow key allows for scrolling thru menu items
Menu: Allows for changes to default settings (see below)
Backlite (optional) Arrow Key: Manually turns backlite on & off (auto off options in menu), arrow key allows for scrolling thru menu items
Enter: Selects items in the menu

MENU MODE

Engineering Units (Units): 10 units of measurement are available; psi, inH_2O with 3 temp. options: 20°C, 60°F, 4°C*, mmHg, ftH_2O, mPa, kPa, kg/cm^2 & bar
Configuration Mode (Config): Allows for changes to default settings of gauge
Bar Graph (Graph): Allows for adjustment of bar-graph & 4-20mA output
Auto Off (Off): Allows for changes to auto off of gauge: 5 options:, 30 min., 10 min., 5 min., 2 min., never
Update Rate (Update): 4 options: 100mili-sec, 1 sec, 500mili-sec, 200mili-sec,
Dampening (Damp): 6 options: none, average 8, 6, 4, 2 times per 100ms
Backlite Lit (optional): 5 options: NEVER, 10 sec, 30, sec, 1 min, 5 min.
Zero Disable: Zero "lockout" feature
Field Recalibration: Zero, span & midscale (password protected)
Calibration: Allows for recalibration of zero & span (includes factory default calibration)

OPTIONS

4-20mA Output
Line Powered: 12-36 Vdc
Switching: (XU1 code) (1) or (XU@ code) (2) SPDT switches, (requires line power), (max. contact 30Vdc, 1 amp, 125Vac, .5 Amp) switches adjustable to 100% of range
Remote Mount Seal: (RE code) standard with 10´ shielded cable

NOTES

(1) 3´ shielded cable standard.
(2) Rezero gauge often after exposure to elevated temperatures and use.
(3) The 2030 Series Digital Gauge is not suitable for an autoclave.

RANGES

psi	in. Hg (Vacuum)	Comp. (psi)	mmHg (pressure)	in. Hg (pressure)	in. H_2O
15	30*	–15/0/15*	800	30	400
30		–15/0/30*	1000	60	800
60		–15/0/60*	2000	100	1000
100		–15/0/100*	3000	160	
160			5000	200	
200			10,000	300	
300				400	
600				600	
800				800	
1000					

mBar	ft. H_2O	mPa	kPa	Bar/ KSC
1000	60	1	100	1
1500	160	1.6	160	1.6
2000	200	2.5	250	2.5
2500	300	4	400	4
4000	400	6	600	6
5000	600	10	1000	10
8000	1000	16	1600	16
10,000		25	2500	25
15,000		40	4000	40
20,000		60	6000	60

*Note all compound and vacuum ranges require mineral oil fill (XMY option)

HOW TO ORDER

30	2032	SD	15L	RE	160#

Dial Size: 3˝
Case Type Number:
2032 Battery
2132 4-20mA loop powered
2232 12-36 Vdc
2036 In-line battery
2136 In-line 4-20mA loop powered
2236 In-line 12-36Vdc
Wetted Parts: 316L SS
Process Connection: 1.5,˝ 2.0˝ Tri-Clamp
Variations: RE remote mount in-line design
Range: 160 psi

Consult factory for guidance in product selection
Phone (203) 378-8281 or visit our
web site at www.ashcroft.com

ASHCROFT®

Sanitary Gauges Type 1032, Accuracy (±1.5%-2.0% of span)

DESIGNED FOR SAFETY AND LONGER LIFE

- ***Patented PowerFlex™ movement isolates movement from shock and vibration for longer life***
- ***All stainless, all-welded construction for long life***
- ***PLUS!™ Performance Option:***
  - ***Liquid-filled performance in a dry gauge***
  - ***Reduces wear caused by vibration and pulsations without liquid-fill headaches***
- ***Autoclavable to 300°F (149°C)(1)***
- ***True Zero™ pointer indication – no stop pin to mask false zero reading – ensures safety and process control***

(1) Available in 3½˝ 1032 only with option XPS polysulfone window.·

OTHER FEATURES:

Available in 2½˝, 3½˝ and 4½˝ dial sizes, 1032 sanitary pressure gauges can be autoclaved/sterilized and cleaned or steamed in place (CIP, SIP). These gauges have been designed specifically to meet the needs of the sanitary marketplace.

They are available dry, liquid-filled or hermetically sealed to allow for washdowns and also available with the ***PLUS!™*** performance option. Actual material certificates and certificates of conformance supplied as standard to EN 10204: 2004 3.1.

PRODUCT SPECIFICATIONS

Dial Sizes: 2½˝, 3½˝ and 4½˝(2)

Process Connection: 1½˝ and 2˝ Tri-Clamp lower and back(3)

Diaphragm Material and Surface Finish: Electropolished 316L stainless steel 12-20RA (Micro-inch)

Case and Ring: 300 series polished stainless steel

Accuracy: ±1.5% of span for pressure ranges 100 psi thru 1000 psi. ±2.0% of span for vacuum, compound and pressure ranges below 100 psi

Pointer: Adjustable (external zero adjust on 3½˝ dial size)

Windows: 2½˝, 3½˝–Polycarbonate standard
4½˝–Glass standard

Dial: White with black markings including 3A insignia

Agency Compliance: 3A compliance to standard 74-05 titled – "3A Sanitary Standard for Liquid Pressure and Level sensing Devices"

System Filling: Pharmacuetical/Kosher USP grade glycerin (99.5% pure)
Optional: Food grade silicone

Optional System Fillings: Consult factory

Case Fillings: The standard sanitary gauge is dry Optional fills include:
- Glycerin USP Grade 99.5% pure)
- Food grade silicone

Optional Windows: Safety glass (all sizes) and polysulfone (3½˝ only).

Clean or Steam in Place: (CIP or SIP) Process temperature limit 280°F (138°C).

Autoclave or Sterilize: Ambient temperature limit of 300°F (149°C) when supplied with polysulfone window (3½˝ dry gauge only).

Notes:

(2) 4½˝ available with lower-connect 2˝ Tri-Clamp only.

(3) For other connections, consult the factory.

- Dual scales, metric ranges and false reading dials are available on request.
- Special dials with colors, logos, etc., available upon request.
- Tri-Clamps not included.
- Tri-Clamp is a registered trademark of Alfa Laval Inc.

STANDARD RANGES(4)

Pressure psi	Compound Vacuum/psi
0/15	30 in.Hg/0 psi
0/30	30 in.Hg/15 psi
0/60	30 in.Hg/30 psi
0/100	30 in.Hg/60 psi
0/160	30 in.Hg/100 psi
0/200	30 in.Hg/150 psi
0/300	30 in.Hg/300 psi
0/400	
0/600	
0/1000(5)	

(4) Nonstandard ranges available standard including units in bar, kg/cm² and kPa.
(5) Consult Alpha Laval-Triclover for appropriate clamps for 1000 psi range.

TO ORDER THIS 1032 SANITARY GAUGE:

Select: **35** **1032S** **L** **15L** **100#**

1. Dial size–2½˝, 3½˝ & 4½˝
2. Case type–1032
3. Liquid-filled case, if required otherwise eliminate
4. Process connection Tri-Clamp size–1½˝ (15), 2˝ (20)
5. Connection location–Lower (L), Back (B)
6. Standard pressure range

Consult factory for guidance in product selection
Phone (203) 378-8281 or visit our
web site at www.ashcroft.com

ASHCROFT®

In-Line Sanitary Gauges Type 1036 with Type 1037 Sanitary Instrument Fitting

TYPE 1036 SANITARY GAUGE

- *All-welded stainless steel Bourdon tube*
- *Field liquid-fillable gauge case*
- *True Zero™ pointer indication*
- *PowerFlex™ movement for extended life*
- *Easy Zero™ external pointer adjustment standard*
- *Retrofits Anderson Instrument CPM design*
- ***PLUS!**™ Performance Option:*
  - *Liquid-filled performance in a dry gauge*
  - *Reduces wear caused by vibration and pulsations without liquid-fill headaches*
  - *Order as option XLL*

TYPE 1037 INSTRUMENT FITTING

- *Tubing O.D. size from ½″ thru 2″*
- *316L SS*
- *Electropolished 12-20RA (Micro-inch) internal surface finish*
- *Heat number stamped on each fitting*

Ashcroft® Type 1036 in-line sanitary pressure gauge and Type 1037 sanitary instrument fitting virtually eliminate process deadleg. The design of the Type 1036 sanitary gauge and instrument fitting allows for the diaphragm of the gauge to be positioned at the gauge instrument fitting, eliminating the pocket or deadleg that may cause contamination.

The Type 1036 sanitary gauge and Type 1037 instrument fitting utilize a 1½″ Tri-Clover-type mating connection. This feature offers flexibility to use the Ashcroft Type 1036 with the Type 1037 instrument fitting on sanitary instrument fitting for tube sizes from ½″ thru 2″.

PRODUCT SPECIFICATIONS FOR 1036 SANITARY GAUGE

Dial Size: 3½″

Accuracy: ±1.5% of span for pressure ranges 100 psi thru 1000 psi. ±2.0% of span for vacuum, compound and pressure ranges below 100 psi

Case and Ring: 300 series stainless steel

Ring Type: Bayonet

Bourdon Tube and Socket: 316L stainless steel

Diaphragm Material and Surface Finish: 316L SS Electropolished 12-20RA (Micro-inch)

Diaphragm O-Ring: Buna-N(1)

Connection: Lower

System Filling: Pharmacuetical/Kosher USP grade glycerin (99.5% pure)
Optional: Food grade silicone

Windows: Polycarbonate

Pointer: Black-painted aluminum with (external zero adjustment)

Dial: White with black markings including 3A insignia

Movement: 300 series stainless steel

Agency Approvals: 3A compliance to sanitary standard 74-05

Ranges: 15# thru 1000#, including compound and vacuum

Clean or Steam in Place: (CIP or SIP) Process temperature limit 280°F (138°C).

Autoclave or Sterilize: Ambient temperature limit of 300°F (149°C) when supplied with polysulfone window (3½″ dry gauge only).

We recommend a polysulfone window for autoclave/sterilization. Specify the XPS variation. Available 3½″ 1032 only

ASHCROFT® TYPE 1037 INSTRUMENT FITTING

Feature	*Code*
316L SS construction	Standard
Wetted parts electropolished to 12-20RA (Micro-inch)	Standard
Heat number stamped on fitting	Standard
Sizes:	
½″ Tri-Clamp connection	50
¾″ Tri-Clamp connection	75
1″ Tri-Clamp connection	10
1½″ Tri-Clamp connection	15
2″ Tri-Clamp connection	20

To Ensure Cleanliness

(1) Prior to reinstalling the Type 1036 into the Type 1037 instrument fitting, we recommend replacing the O-ring (P/N 185A106-75)

STANDARD RANGES(2)

Pressure psi	Compound Vacuum/psi
0/15	30 in.Hg/0 psi
0/30	30 in.Hg/15 psi
0/60	30 in.Hg/30 psi
0/100	30 in.Hg/60 psi
0/160	30 in.Hg/100 psi
0/200	30 in.Hg/150 psi
0/300	30 in.Hg/300 psi
0/400	
0/600	
0/1000(3)	

(2) Nonstandard ranges available standard including units in bar, kg/cm² and kPa.
(3) For high pressure Tri-Clamps® consult Alfa Laval Inc.

TO ORDER THIS 1036 SANITARY GAUGE:

Select: 35 1036 SD L 15L XXX 100#

1. Dial size–3½″
2. Family–1036
3. System material/fill–dry
4. Liquid filled core if required. Drop D and add L (glycerin)
5. Connection size/location–1.5″ seal/lower
6. X variations
7. Range

TO ORDER 1037 FITTING:

75 – 1037

50 – ½″ Tri-Clamp connection
75 – ¾″ Tri-Clamp connection
10 – 1″ Tri-Clamp connection
15 – 1½″ Tri-Clamp connection
20 – 2″ Tri-Clamp connection

Consult factory for guidance in product selection
Phone (203) 378-8281 or visit our web site at www.ashcroft.com

ASHCROFT®

Fractional Sanitary Pressure Gauge, Type 1032 Accuracy (±2.0% of span)

- ***For use with ¾˝Tri-Clamp connections ONLY***
- ***2˝ gauge size suitable for limited-space applications***
- ***316L stainless steel process wetted parts***
- ***Self-draining case designed for washdowns***
- ***Small diaphragm to minimize process deadleg***
- ***Autoclavable***
- ***Can be steamed or cleaned-in-place (SIP or CIP)***

The Ashcroft® Type 1032 fractional sanitary gauge is designed for applications in the food, pharmaceutical, and biotechnical industries where small size and sanitary conditions are a priority.

This compact 2˝ gauge features all-stainless steel construction, temperature-vented case, built-in pressure damping and a self-draining case to facilitate washdowns. The Type 1032 can also be cleaned or steamed in place. Available in a wide variety of pressure ranges from 30 psi, including compound.

Actual material certificates supplied as standard to EN 10204: 2004 3.1.

IN A RUSH? ASK FOR ASHCROFT GOLD SERVICE

PRODUCT SPECIFICATIONS

Size: 2˝ (50mm)

Process Connection: ¾˝ Tri-Clamp, lower connection only

Diaphragm & Housing: 316 stainless steel electropolished 12-20Ra (micro-inch)

Accuracy: Upscale accuracy ±2% of span to ±3% of span depending on range. Downscale accuracy up to 5%

Pointer: Nonadjustable

Window: Glass standard

Dial: White with black markings

Accuracy: 2˝ (50mm)

System Filling: Pharmaceutical/food quality USP grade Kosher glycerin (99.5% pure)

Notes:

- Dual-scale, metric ranges and special dials with logos are available on request
- The Ashcroft sanitary gauge can be recalibrated at the factory
- Tri-Clamp is a registered trademark of Alpha Laval, Inc.
- Gasket material and clamp torque tightness may effect gauge accuracy. The Ashcroft Type 1032 fractional sanitary pressure gauge is calibrated at the factory using a Buna gasket. The Tri-Clamp type of clamp is tightened to 25 inch pounds during calibration as recommended by the clamp manufacturer. Specify gasket material if other than Buna when ordering the Ashcroft 1032 fractional pressure gauge.

STANDARD RANGES[1]

Pressure psi	Compound Vacuum/psi
0/30	30 in.Hg/30 psi
0/60	30 in.Hg/45 psi
0/100	30 in.Hg/60 psi
0/160	30 in.Hg/100 psi
0/200	30 in.Hg/150 psi
0/300	30 in.Hg/300 psi
0/400	
0/600	

TO ORDER THIS 1032 SANITARY GAUGE:

Select: **20** **1032** **S** **75L** **100#**

1. Dial size–2˝
2. Case type–1032
3. Diaphragm–316L stainless steel
4. Process connection Tri-Clamp size–¾˝ (75)
5. Connection location–Lower (L)
6. Pressure range

Consult factory for guidance in product selection
Phone (203) 378-8281 or visit our
web site at www.ashcroft.com

ASHCROFT®

Options for Process, Stainless Steel, Test and Industrial Pressure Gauges

CODE	DESCRIPTION	PRESSURE GAUGE TYPE							
	PLUS! Performance	DURAGAUGE GAUGES	1259	1009 (2½", 3½")	1009 (4½", 6")	1008S	TEST GAUGES	1010, 1017, 1220	1490/1495 SERIES
XLL	***PLUS!*** Performance	●		●	●	●(1)			
XBF	Wall mounting bracket				●				
XFW	Back flange			●					
XFF	Front flange			●	●	●			
XUC	U-clamp			●	●	●			●
XLJ	Dry liquid-fillable gauge	●	●	●	●	●			
XOS	Overload stop	●	●	STD	●	(3)	STD	●	
XVS	Underload stop	●	●	STD	●	(3)	STD	●	
XTS	Throttle screw	●	●	●	●	●	●	●	●
XTU	Throttle plug			●		●			●
XS4	Slotted link movement (decrease)	●			●			●	
XRJ	Slotted link (increase)	●			●			●	
XAP	Adjustable pointer				●			●	
XMP	Micrometer pointer	STD	STD	●	●			●	
XSH	Red set hand stationary	●		●	●			●	
XEO	Red set hand adjustable	●			●		●	●	●
XEP	Maximum pointer	●			●		●	●	
XEQ	Minimum pointer	●			●		●	●	
XPD	Plastic window	●	●	STD	●	STD(2)	●	●	STD
XSG	Safety glass	●	●	●	●		●	●	
XRG	Regular glass	STD	STD		STD		STD	STD	
XDA	Dial marking	●	●	●	●	●	●	●	●
XNN	Paper tag	●	●	●	●	●	●	●	●
XNH	Stainless steel tag	●	●	●	●	●	●	●	●
XAB	Absolute pressure	●			●				
XAJ	½% optional accuracy	STD	STD		●			●	
XAN	1% optional accuracy			STD	STD				●
XBD	Black dial	●		●	●	●	●	●	●
X6B	Oxygen-cleaned gauges (gaseous)	●	●	●	●	●	●	●	
XTB	Tip bleed	●					●		
XED	High and low electric contacts	●							
XEE	Double high-electric contacts	●							
XEF	Double low-electric contacts	●							
XEG	Electric contacts off at low or high and in-between	●							
XGV	Silicone-filled gauge	●		●	●	●			
XGX	Halocarbon-filled gauge	●		●	●	●			
XCH	Carrying handle						●		
XC4	Calibration Chart	●		●	●	●	●	●	●

NOTES:
The options listed above are only a partial listing. For other options on these or other pressure instruments please call the factory for availability.
(1) Available on 63mm and 100mm.
(2) Available on 40mm and 50mm. Standard window material is glass for 40/50mm 1008S.
(3) Standard 63 & 100mm.

COMMERCIAL GAUGES

(Generally ASME B 40.1 Grade B (±3-2-3% of span), accuracy , review section for exceptions)

Type 1005 129
Type 1005P 130
Type 1005S 131
Type 1001T Panel Gauges 132
Type 1005P, XUL Sprinkler Gauges 133
Type 1005M, XRG Agricultural Ammonia Gauges 134
Type 1008A/AL General Service Gauges 135
Type 1000 and Type 2071A Contractor Gauges 136
Type 1007P, XOR; Type 1001T, XOR Refrigeration Gauges 137
Type 23DDG MiniGauge® Pressure Gauge .. 138
Type 12DDG, 15DDG Direct Drive Gauges ... 139

ASHCROFT®

Commercial Pressure Gauge Type 1005, ASME B 40.100 Grade B (±3-2-3% of span)

- ***Case material is black-painted steel***
- ***These gauges have a heat-resistant push-in polycarbonate window***
- ***Dial faces match other Ashcroft® commercial gauges for easy readability***
- ***Patented PowerFlex™ movement with polyester segment***
- ***True Zero™ indication, a unique safety feature***

Ashcroft® Type 1005 gauges are available in 1½″ through 3½″ dial sizes. The full-view polycarbonate push-in window allows for better dial visibility. These gauges are commonly used on compressors, filter regulators, water pumps, beverage-dispensing equipment, paint sprayers and a variety of other applications.

Ashcroft Type 1005 gauges have the patented Power*Flex* movement with polyester segment for increased resistance to rough usage, for a more durable, longer-lasting gauge.

True Zero indication reduces the potential risk of installing a damaged gauge on your equipment.

FlutterGuard™ can be added to Type 1005 gauges to eliminate pointer flutter and extend gauge life.

GAUGE SPECIFICATIONS

Type no.:	1005
Accuracy:	ASME B 40.100 Grade B (±3-2-3% of span)
Size:	1½″, 2″, 2½″, 3½″
Case:	Black-painted steel
Ring:	None
Window:	Polycarbonate push-in
Dial:	Black figures on white background
Pointer:	Black, aluminum
Bourdon tube:	"C" shaped bronze (2″-3½″ vac-600 psi and compound, 1½″ vac-1000 psi) Helical bronze (2″-3½″ 1000-6000 psi)
Movement:	Patented Power*Flex* with polyester segment
Socket:	Brass
Restrictor:	0.013″ orifice throttle plug in gauges 1000 psi and above
Connection:	⅛ NPT lower, ⅛ NPT back ¼ NPT lower, ¼ NPT back (1½″ available in ⅛ NPT only)
Ranges:	1½″ vac-1000 psi 2″-3½″ vac-6000 psi and compound
Operating temperature:	–40°F to 150°F, –40°C to 65°C
Note:	4½″ gauges are available as Type 1000 with black friction-fit ring and plastic window. Refer to Bulletin CG-10

GAUGE OPTIONS

	Factory variation code in ( )
Case:	Case color other than black Vent hole (VH)
Pointer:	Adjustable (AP)
Socket:	Nickel plated brass (NP) Nonstandard length or thread Throttle plugs, 0.007″, 0.013″, 0.020″, 0.063″ orifices Teflon taped threads (TC)
Others:	Bulk packaging (ZO) Customized dials Nonstandard ranges and special calibration on application UL 404 and UL 252A listing for compressed gas service for 2″ gauges FlutterGuard (SF) Top or side connection: (02D= right side) (02E= left side) (02T= top connection) Receiver ranges: 3/15 psi, 0/10 square root, 0/100% (PR) Clean for oxygen service

TO ORDER THIS TYPE 1005 GAUGE:

Select:	20	W	1005	H	01L	X(AP)	100#
1. Dial Size: 2″							
2. Patented Power*Flex*™ Movement							
3. Case Type Number: 1005							
4. Socket Material: Brass							
5. Connection Size/Location: ⅛ NPT lower							
6. Option: Adjustable Pointer							
7. Range: 100 psi							

ASHCROFT®

Commercial Pressure Gauge
Type 1005P, ASME B 40.100
Grade B (±3-2-3% of span)

- ***Case material is ABS***
- ***Heat-resistant polycarbonate window***
- ***Excellent for applications where corrosion or impact resistance is a necessity***
- ***Patented PowerFlex™ movement with polyester segment***
- ***True Zero™ indication, a unique safety feature***

The Ashcroft® Type 1005P case is made of ABS (Acrylonitrile Butadiene Styrene), which is ideal for rugged applications and harsh environmental conditions. The 1005P gauge has a full-view polycarbonate window for better dial visibility. For applications requiring a high degree of corrosion resistance (where a more expensive stainless steel case is specified), the Type 1005P gauge is ideal. The new panel mount conversion kits allows the user to convert any back connect gauge into a panel mount gauge.

The Power*Flex* movement in these gauges offers superior shock, vibration and pulsation resistance.

True Zero indication reduces the potential risk of installing a damaged gauge on your equipment.

FlutterGuard™ can be added to Type 1005P gauges to eliminate pointer flutter and extend gauge life.

GAUGE SPECIFICATIONS

Type no.:	1005P
Accuracy:	ASME B 40.100 Grade B (±3-2-3% of span)
Size:	1½˝, 2˝, 2½˝, 3½˝
Case:	ABS
Ring:	None
Window:	Polycarbonate snap-in
Dial:	Black figures on white background
Pointer:	Black, aluminum
Bourdon tube:	“C” shaped bronze (2˝-3½˝ vac-600 psi and compound, 1½˝ vac-1000 psi) Helical bronze (2˝-3½˝ 1000-6000 psi)
Movement:	Patented Power*Flex* with polyester segment
Socket:	Brass
Restrictor:	0.013˝ orifice throttle plug in gauges 1000 psi and above
Connection:	⅛ NPT lower, ⅛ NPT back ¼ NPT lower, ¼ NPT back (1½˝ available in ⅛ NPT only)
Ranges:	1½˝ vac-1000 psi 2˝-3½˝ vac-6000 psi and compound
Operating temperature:	–40°F to 150°F, –40°C to 65°C

GAUGE OPTIONS

	Factory variation code in ( )
Case:	Panel mount conversion kit (XUC) Case color other than black Vent hole (VH)
Pointer:	Adjustable (AP)
Socket:	Nonstandard length or thread Throttle plugs, 0.007˝, 0.013˝, 0.020˝, 0.063˝ orifices Nickel plated brass (NP) Teflon taped threads (TC)
Others:	Bulk packaging (ZO) Customized dials FlutterGuard (SF) Clean for oxygen service Nonstandard ranges and special calibration on application Top or side connection: Panel mount conversion kit Receiver ranges: 3/15 psi, 0/10 square root, 0/100% (PR) UL 404 and UL 252A listing for compressed gas service for 2˝ gauges

TO ORDER THIS TYPE 1005P GAUGE:

Select:	20	W	1005	P	H	01B	X(AP)	100#

1. Dial Size: 2˝
2. Patented Power*Flex*™ Movement
3. Case Type Number: 1005
4. Case Material: ABS
5. Socket: Brass
6. Connection Size/Location: ⅛ NPT back
7. Option: Adjustable Pointer
8. Range: 100 psi

ASHCROFT®

Commercial Pressure Gauge Type 1005S, ASME B 40.100 Grade B (±3-2-3% of span)

- ***Case material is stainless steel***
- ***These gauges have a heat-resistant push-in polycarbonate window***
- ***Dial faces match other Ashcroft commercial gauges for easy readability***
- ***Patented PowerFlex™ movement with polyester segment***
- ***True Zero™ indication, a unique safety feature***

Ashcroft® Type 1005S gauges are available in 1½″ and 2″ dial sizes. The full-view polycarbonate push-in window allows for better dial visibility. For added resistance to harsh environmental conditions, the 1005S dial material is aluminum. Ashcroft Type 1005S gauges use the patented Power*Flex* movement with polyester segment, which increases the ability to resist rough usage, thereby helping to lengthen the life of the gauge.

True Zero indication reduces the potential risk of installing a damaged gauge on your equipment.

FlutterGuard™ is available to eliminate pointer flutter and extend gauge life.

GAUGE SPECIFICATIONS

Type no.:	1005S
Accuracy:	ASME B 40.100 Grade B (±3-2-3% of span)
Size:	1½″, 2″
Case:	Stainless steel
Ring:	None
Window:	Polycarbonate push-in
Dial:	Black figures on white background, aluminum
Pointer:	Black, aluminum
Bourdon tube:	"C" shaped bronze (Vac.-600 psi and compound)
Movement:	Patented Power*Flex* with polyester segment
Socket:	Brass
Connection:	⅛ NPT lower, ⅛ NPT back ¼ NPT lower, ¼ NPT back (1½″ available in ⅛ NPT, back connection only)
Ranges:	Vac.-600 psi and compound (1½″ available in vac.-300 psi only)
Operating temperature:	–40°F to 150°F, –40°C to 65°C

GAUGE OPTIONS

	Factory variation code in ( )
Case:	Vent hole (VH)
Pointer:	Adjustable (AP)
Socket:	Nickel plated brass (NP) Nonstandard length or thread Throttle plugs, 0.007″, 0.013″, 0.020″, 0.063″ orifices Teflon taped threads (TC)
Others:	Bulk packaging (ZO) Customized dials FlutterGuard (SF) Nonstandard ranges and special calibration on application Top or side connection: (02D = right side) (02E = left side) (02T = top connection) Receiver ranges: 3/15 psi, 0/10 square root, 0/100% (PR) Clean for oxygen service

TO ORDER THIS TYPE 1005S GAUGE:

Select:	20	W	1005	S	H	01L	X(AP)	100#
1. Dial Size: 2″								
2. Patented Power*Flex*™ Movement								
3. Case Type Number: 1005								
4. Case Material: Stainless Steel								
5. Socket: Brass								
6. Connection Size/Location: ⅛ NPT lower								
7. Option: Adjustable Pointer								
8. Range: 100 psi								

ASHCROFT®

Commercial Panel Gauge
Type 1001T, ASME B 40.100 Grade B (±3-2-3% of span)

- ***Available in 1½˝, 2˝, 2½˝ and 3½˝ dial sizes***
- ***Standard panel-mounting with U-clamp design — front flange mounting available for 2˝ and 2½˝ gauges***
- ***Attractively designed ¼ turn polycarbonate window for better visibility and easy removal***
- ***Patented PowerFlex™ movement with polyester segment***
- ***True Zero™ indication, a unique safety feature***

Ashcroft® panel gauges offer attractive design, excellent readability, and a variety of dial sizes with a broad pressure range selection. The ¼ turn heat-resistant polycarbonate window is available with a hot-stamped mirror band to simulate chrome to further enhance your equipment. The patented Power*Flex*™ movement with polyester segment offers superior resistance to shock, vibration and pulsation.

True Zero™ indication, a standard feature on these gauges, reduces the potential risk of installing a damaged gauge on your equipment.

FlutterGuard™ is available to eliminate pointer flutter and extend gauge life.

GAUGE SPECIFICATIONS

Type no.:	1001T
Accuracy:	ASME B 40.100 Grade B (±3-2-3% of span)
Size:	1½˝, 2˝, 2½˝, 3½˝
Case:	Black-painted steel
Mounting:	U-clamp (UC)
Ring:	None
Window:	¼ turn threaded polycarbonate
Dial:	Black figures on white background
Pointer:	Black, aluminum
Bourdon tube:	"C" shaped bronze (2˝- 3½˝ vac-600 psi, 1½˝ vac-1000 psi) Helical bronze (2˝- 3½˝ 1000-6000 psi)
Movement:	Patented Power*Flex* with polyester segment
Socket:	Brass
Restrictor:	0.013 orifice throttle plug in gauges 1000 psi and above
Connection:	⅛ NPT Back, ¼ NPT Back (1½ available in ⅛ NPT only)
Ranges:	Vac.-6000 psi and compound (1½˝ available in vac-1000 psi only)
Operating temperature:	–40°F to 150°F, –40°C to 65°C

GAUGE OPTIONS

	Factory variation code in ( )
Case:	Vent hole (VH)
Mounting:	Front flange (FF) (available in 2˝ and 2½˝ only)
Window:	Simulated chrome trim (KL)
Pointer:	Adjustable (AP)
Socket:	Nonstandard length or thread Throttle plugs, 0.007˝, 0.013˝, 0.020˝, 0.063˝ orifices Teflon taped threads (TC)
Others:	Bulk packaging (ZO) Customized dials FlutterGuard (SF) Nonstandard ranges and special calibration on application Receiver ranges: 3-15 psi, 0-10 square root, 0-100% (PR) Clean for oxygen service

TO ORDER THIS TYPE 1001T GAUGE:

Select:	20	W	1001	T	H	02B	X(UC)	100#
1. Dial Size: 2˝								
2. Patented Power*Flex*™ Movement								
3. Case Type Number: 1001								
4. ¼ Turn window								
5. Socket Material: Brass								
6. Connection Size/Location: ¼ NPT Back								
7. Mounting: U-clamp								
8. Range: 100 psi								

ASHCROFT®

Fire Protection, Sprinkler Service
Gauge Type 1005P, XUL
ASME B 40.100 Grade B
(±3-2-3% of span)

- ***Underwriters Laboratory listed and Factory Mutual approved***
- ***Corrosion-resistant ABS case***
- ***Heat-resistant polycarbonate push-in window***
- ***Patented PowerFlex™ movement with polyester segment***
- ***True Zero™ indication, a unique safety feature***

Ashcroft® fire protection sprinkler gauges are Underwriters Laboratory listed and Factory Mutual approved for fire protection sprinkler service. The case material on Type 1005P, XUL gauges is ABS. The 0-300 psi pressure Arange is used on "wet" systems where water is available to the sprinkler heads. The 0-80 retard to 250 psi pressure range is used on dry systems where the lines are filled with air pressure until system activation.

The patented Power*Flex*™ movement with polyester segment is designed to provide unequalled shock and vibration resistance resulting in superior performance and extended gauge life.

True Zero™ indication, a standard feature on these gauges, reduces the potential risk of installing a damaged gauge on your equipment.

GAUGE SPECIFICATIONS

Type no.:	1005P, XUL
Accuracy:	ASME B 40.100 Grade B (±3-2-3% of span)
Size:	3½˝
Case:	ABS (Polycarbonate blend)
Ring:	None
Window:	Polycarbonate, push-in
Dial:	Black figures on white background
Pointer:	Black, aluminum
Bourdon tube:	"C" shaped bronze
Movement:	Patented Power*Flex* with polyester segment
Socket:	Brass
Restrictor:	None
Operating temperature:	–40°F to 150°F, –40°C to 65°C
Connection:	¼ NPT lower
Ranges:	0-300 psi (water) 0-80 retard to 250 psi (air) 0-600 psi UL 393 Listed, UL of Canada Listed and FM approved.

NEW!

JUST RELEASED!!
Triple scale dial faces – psi / kPa / bar

GAUGE OPTIONS

Customized dials

Other UL listed ranges on application

Dual or triple scale metric dials

NOTES

FM UL LISTED

LOOK FOR THESE AGENCY MARKS ON OUR PRODUCTS

TO ORDER THIS TYPE 1005P, XUL GAUGE:

Select:	35	W	1005	P	H	02L	XUL	300#

1. Dial Size: 3½˝
2. Patented Power*Flex*™ Movement
3. Case Type Number: 1005
4. Case Type Material: ABS
5. Socket Material: Brass
6. Connection Size/Location: ¼ NPT lower
7. UL listed, FM approved
8. Range: 300 psi

ASHCROFT®

Agricultural Ammonia Gauge
Type 1005M, XRG
ASME B 40.100 Grade B
(±3-2-3% of span)

- ***Available in black-painted steel case***
- ***Steel socket, stainless steel bourdon tube***
- ***Soldered tube-to-socket, and tube-to-tip joints***
- ***Patented PowerFlex™ stainless steel movement with polyester segment***
- ***True Zero™ indication, a unique safety feature***

The Ashcroft® Type 1005M, XRG agricultural ammonia gauge is designed to withstand rugged agricultural applications. The patented Power*Flex*™ movement and state-of-the-art manufacturing processes provide superior gauge performance and extended gauge life. Gauges are tested to ensure leak integrity to 2.8 x 10^{-4} cc per second of gas at rated pressure. The glass window eliminates the fogging that occurs when plastic windows are exposed to ammonia.

True Zero™ indication reduces the potential risk of installing a damaged gauge on your equipment.

GAUGE SPECIFICATIONS

Type no.:	1005M, XRG
Accuracy:	ASME B 40.100 Grade B (±3-2-3% of span)
Size:	2½″
Case:	Black painted steel
Ring:	Black painted steel
Window:	Glass
Dial:	Black figures on white background
Pointer:	Black, aluminum
Bourdon tube:	"C" shaped 316 stainless steel
Movement:	Patented Power*Flex* stainless steel movement with polyester segment
Socket:	Steel
Restrictor:	None
Connection:	¼ NPT lower
Construction:	Soldered tube/socket and tube/tip joints
Ranges:	0/60 psi, 0/150 psi, 0/400 psi
Operating temperature:	–40°F to 150°F, –40°C to 65°C

GAUGE OPTIONS

Window:	Push-in polycarbonate (exclude XRG)
Socket:	Throttle plug, stainless steel, 0.020″ orifice
Others:	Bulk packaging (ZO) Special calibration on application Customized dials FlutterGuard™

TO ORDER THIS TYPE 1005M, XRG GAUGE:

Select:	**25**	**W**	**1005**	**M**	**02L**	**XRG**	**400#**

1. Dial Size: 2½″
2. Patented Power*Flex*™ Movement
3. Case Type Number: 1005
4. Socket Material: Steel
5. Connection Size/Location: ¼ NPT lower
6. Glass window and retaining ring
7. Range: 400 psi

ASHCROFT®

Stainless Steel Case Gauge
Type 1008A/AL, 63mm and 100mm
ASME B 40.100 Grade B
(±3-2-3% of span)

- ***63mm (2½˝) and 100mm (4˝) case sizes***
- ***Soldered brass socket and bronze tube design***
- ***Corrosion-resistant stainless steel case/ring***
- ***Dry, field-fillable or liquid-filled versions***
- ***Patented PowerFlex™ movement***
- ***True Zero™ indication, a unique safety feature***
- ***Two-year warranty on liquid-filled gauges***

Ashcroft® Type 1008A gauges are synonymous with durability, flexibility and exceptional quality. The Type 1008A gauge enclosure is sealed to provide maximum protection in adverse environmental conditions. Both 63mm and 100mm Type 1008A gauges are available dry, field-fillable, glycerin filled or silicone filled. Accessory kits are available for panel mounting, front flange mounting or retrofit mounting back connection gauges. The patented Power*Flex*™ movement provides a higher level of shock, vibration and pulsation resistance than conventional movement gauges.

The True Zero™ feature helps to assure a quality process and reduces manufacturing and inspection costs.

FlutterGuard™ is available for dry gauges to eliminate pointer flutter and extend gauge life.

VENTABLE FILL PLUG

GAUGE SPECIFICATIONS

Type no.:	1008A/AL
Accuracy:	ASME B 40.100 Grade B (±3-2-3% of span)
Size:	63mm (2½˝), 100mm (4˝)
Case:	304 stainless steel, dry (1008A), or liquid filled (1008AL) with ventable plug
Fill Fluid:	Glycerin
Ring:	304 stainless steel, crimped
Window:	Polycarbonate
Dial:	Black figures on white background, aluminum
Pointer:	Black, aluminum
Bourdon Tube:	"C" shaped bronze (vac.-600 psi and compound) Helical bronze (1000 psi-6000 psi) Helical stainless steel (10,000 psi-15,000 psi)
Movement:	Patented Power*Flex* with polyester segment
Socket:	Brass, with O-ring case seal
Restrictor:	Brass throttle plug, 0.013˝ orifice in all ranges (except vacuum and 15# psi ranges)
Connection:	¼ NPT lower and back
Ranges:	Vac. thru 15,000 psi and compound. Equivalent metric ranges available
Operating Temperature:	Dry gauge: –40°F to 150°F, –40°C to 65°C Glycerine filled: 20°F to 150°F, –7°C to 65°C

GAUGE OPTIONS

Case:	Sealed case, field-fillable (LJ) Silicone filled (GV)
Mounting Hardware:	U-clamp (UC), front flange (FF), retrofit flange (RF)
Socket:	Throttle plugs, 0.007˝, 0.020˝, 0.063˝
Connections:	JIS, DIN, metric, SAE and other connections on application
Others:	Customized dials Nonstandard ranges FlutterGuard (SF) Special calibration on application Clean for oxygen service – dry gauges only

TO ORDER THIS TYPE 1008A/AL GAUGE:

Select:	63	1008	A	L	02B	XUC	1000#

1. Dial Size: 63mm or 100mm
2. Case Type: 1008
3. Socket Material: Brass
4. Liquid Filled (Glycerin), leave blank if dry
5. Connection Size: ¼ NPT
6. Connection Location: Lower (L), Back (B)
7. Optional Features: XUC = Panel Mounting Kit
8. Range: 1000 psi

ASHCROFT®

4½˝ Gauges
Type 1000, ASME B 40.100 Grade B (±3-2-3% of span)
Type 2071A, ASME B 40.100 Grade A (±2-1-2% of span)

- ***Type 2071A contractor gauge offers aluminum-back flange case (black), with attractive chrome-plated steel ring***
- ***Type 1000 gauge offers black steel case with black ring and acrylic window***
- ***Adjustable pointer is standard on contractor gauges***
- ***Patented PowerFlex™ movement with polyester segment***
- ***True Zero™ indication, a unique safety feature***

Ashcroft® Type 1000 gauges have a black steel case and ring with a plastic window. These gauges are appropriate for general industrial applications and can be customized to complement your equipment.

Ashcroft contractor gauges (Type 2071A) are lightweight, highly sensitive and accurate. These gauges are designed to meet the needs of HVAC and plumbing contractors, and are tested against strict industry specifications. The aluminum case provides corrosion resistance.

The patented Power*Flex*™ movement, in both Types 1000 and 2071A, provides the shock resistance needed for rough treatment.

True Zero™ indication reduces the potential risk of installing a damaged gauge on your equipment.

FlutterGuard™ is available to eliminate pointer flutter and extend gauge life.

Type 2071A Contractor gauge shown

GAUGE SPECIFICATIONS	TYPE 1000	TYPE 2071A
Size:	4½˝	4½˝
Accuracy:	ASME B 40.100, Grade B (±3-2-3% of span)	ASME B 40.100, Grade A (±2-1-2% of span)
Case:	Black-painted steel	Aluminum with back flange, painted black.
Ring:	Black-painted steel, friction fit	Chrome-plated steel, friction fit
Window:	Plastic	Glass
Dial:	Black figures on white background	Black figures on white background
Pointer:	Black, aluminum	Adjustable, black, aluminum
Bourdon tube:	Bronze, soldered	Bronze, soldered (siphon required for steam service)
Movement:	Patented Power*Flex* with polyester segment	Patented Power*Flex* with polyester segment
Socket:	Brass	Brass
Connection:	¼ NPT lower	¼ NPT lower
Ranges:	Vacuum through 600 psi and compound	Vacuum through 600 psi and compound
Operating temperature:	–40°F to 150°F, –40°C to 65°C	–40°F to 150°F, –40°C to 65°C
Options:	Case color other than black Glass window (XRG) Chrome ring (13) FlutterGuard (SF) Adjustable pointer (AP) Nickel-plated socket (NP) Customized dials Throttle plugs: 0.007˝, 0.013˝, 0.020˝, 0.063˝ orifices Special calibration on application	Case color other than black Plastic window (PD) Nickel-plated socket (NP) FlutterGuard (SF) Black steel ring Customized dials Throttle plugs: 0.007˝, 0.013˝, 0.020˝, 0.063˝ orifices Special calibration on application

TO ORDER THIS TYPE 1000/2071A GAUGE:

Select:	45	W	2071A	02L	300#
1. Dial Size: 4½˝					
2. Patented Power*Flex*™ Movement					
3. Case Type Number: 2071A					
4. Connection Size/Location: ¼ NPT lower					
5. Range: 300 psi					

ASHCROFT®

Refrigeration Gauge
Type 1007P, XOR (see below)
Type 1001T, XOR

- ***Standard dials offer four refrigerant scales (R12, R22, R502, 134A)***
- ***FlutterGuard™ eliminates pointer flutter***
- ***Patented PowerFlex™ movement with polyester segment***

Ashcroft® Types 1001T, XOR and 1007P, XOR are designed to meet the unique requirements of the HVAC, automotive and refrigeration industries.

Ashcroft Type 1001T, XOR gauges are designed for refrigerant recovery and recycling units. All gauges for this service are tested for leaks as small as 2.8 x 10^{-4} cc per second to ensure superior integrity. Optional connections eliminate potential leaks at threaded joints and also eliminate customer cost for extra fittings.

Ashcroft Type 1007P, XOR gauges are designed for installation on refrigeration manifolds used in testing automotive, industrial and residential air-conditioning units. The ABS case offers rugged durability and corrosion resistance.

FlutterGuard™, a standard feature in these gauges, eliminates pointer flutter and extends gauge life.

1007P, XOR gauge shown

GAUGE SPECIFICATIONS

	TYPE 1001T, XOR	TYPE 1007P, XOR
Size:	2½″, 3½″	2½″
Accuracy:	1% at zero, 2% three fourths of scale, 5% last fourth of scale	1% at zero, 2% three fourths of scale, 5% last fourth of scale
Case:	Black steel with studs and U-clamp for panel mounting	Red ABS - high pressure Blue ABS - low pressure
Ring:	None	None
Window:	¼ turn polycarbonate, threaded	Polycarbonate, threaded
Dial:	Refrigerant scales R12, R22, R502, R134A, 410A	Refrigerant scales R12, R22, R502, R134A, 410A
Pointer:	Black, aluminum	Black, aluminum
Bourdon tube:	Bronze	Bronze
Movement:	Patented Power*Flex* with polyester segment and FlutterGuard; slotted span screw for minor span adjustments	Patented Power*Flex* with polyester segment and FlutterGuard; slotted span screw for minor span adjustments
Socket:	Brass	Brass
Restrictor:	0.013″ orifice throttle plug	0.020″ orifice throttle plug
Connection:	⅛ NPT back, ¼ NPT back	⅛ NPT lower
Ranges:	30 in.Hg vac./0/120 psi retard to 250 psi; 0-500 psi; 30 in.Hg vac./0/350 psi retard to 500 psi; 0-800 psi	30 in.Hg vac./0/120 psi retard to 250 psi; 0-500 psi; 30 in.Hg vac./0/350 psi retard to 500 psi; 0-800 psi
Operating temp.:	–40°F to 150°F, –40°C to 65°C	–40°F to 150°F, –40°C to 65°C
Options:	Nonstandard ranges Alternate refrigerant ranges SAE Flare, solder bib and ferrule connections, Customized dials	Nonstandard ranges Alternate refrigerant ranges Case color Customized dials

TO ORDER THIS TYPE 1001T, XOR / 1007P, XOR GAUGE:

Select:	25	W	1007	P	H	01L	X(OR)	140#/V
1. Dial Size: 2½″								
2. Patented Power*Flex*™ Movement								
3. Case Type Number: 1007								
4. Case material: ABS								
5. Socket Material: Brass								
6. Connection Size/Location: ⅛ NPT lower								
7. Refrigeration Application								
8. Range: 30″Hg vac./0/120 psi retard to 250 psi								

ASHCROFT®

MiniGauge®
Type 23DDG (±5% full scale)

- ***Compact size – 23mm (.906˝) diameter***
- ***ABS case with acrylic window ultrasonically welded to case***
- ***Wrench flats on socket for easy installation***
- ***Available in 60-300 psi***
- ***Direct Drive technology for excellent shock resistance***

The Ashcroft® MiniGauge® pressure gauge is designed for those applications where space is a limiting factor. Taking into consideration the small size of the MiniGauge (23mm), the dial face was designed for maximum readability. This product is offered in 1/8 NPT back connection with 15mm (9/16˝) wrench flats for easy installation.

The versatile Ashcroft MiniGauge surpasses the demands of durability in two important ways: first, by using direct-drive reading, the spiral tube transmits motion directly to the pointer – no gears or movement parts to wear out; and second, the case material is an ABS blend that is both enduring and attractive.

The Ashcroft MiniGauge is perfect for a multitude of applications where a 1 1/2˝ conventional size gauge is too large.

GAUGE SPECIFICATIONS

Type no.: 23DDG
Accuracy: ±5% of span
Size: 23mm (.906˝)
Case: Black ABS blend
Ring: None
Window: Polycarbonate, ultrasonically welded to case
Dial: Black figures on white background, aluminum
Pointer: Brass, painted black
Bourdon tube: Beryllium copper, spiral; soft soldered to socket
Movement: None (direct-drive reading)
Socket: Brass with 15mm (9/16˝) wrench flats
Connection: 1/8 NPT back

Ranges:

Range (psi)	Dial Arc	
	180°	235°
0/60	*	
0/100	*	
0/160		*
0/200		*
0/300	*	

Repeatability: Better than 1%
Operating temperature: –40°F to 150°F, –40°C to 65°C
Packaging: Bulk pack; individually sealed 2 mil polybags

Note: Consult factory for high cycle-life applications

GAUGE OPTIONS

Socket: Throttle plugs; 10/32˝ threads; PT 1/8 (JIS) and R 1/8 (BSPT) threads
Dial: Customized
Dampening: Silicone-dampened coil for vibration applications

TO ORDER THIS TYPE 23DDG GAUGE:

Select: **23** **DDG** **01B** **60#**

1. Gauge Size: 23mm (.906˝ or 29/32˝)
2. Case Type: Direct Drive Gauge
3. Connection Size/Location: 1/8 NPT back
4. Range: 0/60 psi

ASHCROFT®

Direct Drive Gauge
Type 12DDG, 15DDG
Accuracy (±2% at setpoint)

- ***Sealed stainless steel case provides a weatherproof, dustproof corrosion-resistant gauge***
- ***Spiral tube transmits motion directly to the pointer— no gears or bearings to wear out***
- ***High impact-resistant polycarbonate window***
- ***UL 404 listed for compressed gas (including oxygen) for 1500 psi, 2000 psi, 3000 psi and 4000 psi***

Ashcroft® DDG, direct drive gauges are constructed for strenuous use under severe environmental conditions and can withstand excessive levels of shock and vibration—an excellent choice for outdoor applications. Optional features to enhance the performance of these gauges are silicone-damped tubes for excessive vibration applications and silicone-filled tubes for corrosion protection.

GAUGE SPECIFICATIONS

Type no.: 12DDG, 15DDG

Accuracy: Standard ±2% at setpoint (setpoint is normally 50% of range; other setpoints upon application). UL listed –3.5% of span in middle three-fifths of scale.

Size: 1¼″ - 12DDG
1½″ - 15DDG

Case: Stainless steel, sealed

Ring: None

Window: High impact-resistant polycarbonate

Dial: Black figures on white background

Pointer: Black, integral with bourdon tube

Bourdon tube: Beryllium copper, spiral; soft soldered to socket

Movement: None (direct reading)

Socket: Brass

Available Ranges (psi)	Dial Arc			
	165°	180°	200°	235°
0/60		•		
0/100*				•
0/160				•
0/200				•
0/300				•
0/700			•	
0/1200		•		
0/1500	•			
0/2000	•			
0/3000	•			
0/4000	•			

*12DDG available in 180° arc.

Restrictor: Safety plug-in 1500-4000 psi ranges

Connection: ⅛ NPT back, standard

Repeatability: Better than 1%

Operating temperature: –40°F to 150°F, –40°C to 65°C

Note: Consult factory for high cycle-life applications

GAUGE OPTIONS

Socket: ¼ NPT; throttle plugs, 0.007″, 0.013″, 0.020″, 0.063″ orifice

Others: Customized dials
Metric and dual ranges available
Silicone-damped spiral tube for vibration service
Silicone-filled spiral tube for corrosion protection
UL listed for compressed gas (including oxygen); 1500 psi, 2000 psi, 3000 psi, 4000 psi

TO ORDER THIS TYPE DDG GAUGE:

Select: **15** **DDG** **01B** **100#**

1. Dial Size: 1½″
2. Case Type: DDG
3. Connection Size/Location: ⅛ NPT back = 01B
4. Range: 100 psi

DIAPHRAGM SEALS AND ISOLATORS

Per ASME B40.2 add 0.5% to the accuracy of an attached instrument. The exceptions are T-310/311/312/330 seals which add 1.0%)

Introduction & Selection Information...141-143

Specification Matrix.....144-151

Diaphragm Seals

- Flanged Type 102, 202, 302 & Flushing 103, 203, 303 Series.....152-153
- Threaded Connection Type 100, 200, 300 Series..... 154
- In-Line Connection Type 104, 204, Threaded, Type 106, 206 Flanged..... 155
- Type 105/205 Saddle 107/207 Socket Weld 108/208 Butt Weld 156
- Threaded & Flanged Type 400/500 All Welded..... 157
- Threaded Type 510, 511 All Welded 158
- Threaded Type 311, 312 All Welded Midi.. 159
- Threaded Type 310, 315 All Welded Mini.. 160
- Threaded & Flanged Types 702, 703, 740, 741 161
- Quick Connect Type 320..... 162
- Threaded Type 330 Flush 163
- Type 80, 81 Isolation Ring 164
- Type 85, 86 Isolation Spool..... 165
- Line Assemblies 115A, 115P..... 166
- Engineered Assemblies..... 167
- Options 168-169

Table A (Min. & Max. Pressure for Diaphragm Seals).....170-171

Seal Style Chart 172-177

Introduction

A diaphragm seal is a device that is attached to the inlet connection of a pressure instrument to isolate it from the process media. The area between the diaphragm and the pressure sensing element is solidly filled with a suitable liquid, called the fill fluid. Displacement of the diaphragm compresses the fill fluid, which transmits pressure changes to the pressure instrument.

Ashcroft offers a comprehensive line of diaphragm seals. Seal type includes threaded, flanged, in-line threaded, in-line flanged, in-line socket weld, in-line butt weld, saddle and sanitary seals. Also available is a complete offering of isolation rings and isolation spools.

Applications

Seals and isolators can be used in a variety of applications where one or more of the following are a concern:

- ➤ Corrosive services
- ➤ Slurry and processes prone to clogging
- ➤ Elevated or reduced process temperatures
- ➤ Isolation of the process for safety
- ➤ Suspended solids in the process
- ➤ Sanitary connections
- ➤ Minimize process dead leg
- ➤ Ease of cleaning between batches

Fill Fluid

Ashcroft offers a variety of fill fluids which must be compatible with the process temperature. Glycerin and Silicone are the most commonly used fill fluids. However, when the process media is a strong oxidizing agent such as oxygen, chlorine, nitric acid and hydrogen peroxide the fill fluid must be Halocarbon. Strong oxidizing agents can combine with Glycerin or Silicone which may cause a fire or violent reactions.

Leaks

The entire filled portion of the diaphragm seal and pressure instrument must be leak tight. Any loss of fill fluid will result in significant errors.

Accuracy and Temperature Errors

The addition of a diaphragm seal to an instrument will degrade its accuracy by 0.5%, unless stated otherwise. In addition, changes in ambient temperatures will introduce errors due to fill fluid thermal expansion and contraction.

Warning

All seal components should be selected considering process and ambient operating conditions to prevent misapplication. Improper application could result in failure and possible injury or property damage.

Volumetric Displacement

Volumetric displacement of the seal must be greater than the attached instrument.

Design

Ashcroft diaphragm seal designs are comprised of a top housing, a diaphragm and bottom housing. The top housing has a standard fill/bleed connection allowing the assembly to be evacuated and properly filled. Removal of the bleed screw will cause loss of system fill making the assembly inoperable. The diaphragm is in direct contact with the process media. Bottom housing, also referred to as lower housing, is available in a variety of materials and must be compatible with the process media.

Clamped Design

These include Types 100, 200, 300 and 700 series. The Type 100 series diaphragm is threaded into the top housing. The top housing, diaphragm and lower housing are then clamped as an assembly. Type 200 series diaphragm is either welded or bonded to the top housing. The top housing and diaphragm assembly is clamped together to the lower housing. Type 200 series is offered with both metallic diaphragms as well as elastomers. Ashcroft diaphragm seals are normally furnished with a Nickel-plated carbon steel top housing. For Types 200 and 700 series the materials of both diaphragm and top housing should be like materials. On Type 300 series the top housing, diaphragm and bottom housing are clamped together. Note that the Type 300 series is only offered with Kalrez, Viton or Teflon diaphragms. Type 700 series diaphragm is welded to the top housing. It is offered with metallic diaphragms only and used in low pressure applications.

Notes

Clamp Ring standard material is black epoxy-painted carbon steel. Stainless steel clamp rings and high pressure clamp rings are available.

Upper Flange Rings are per ASME16.5. Nickel plated carbon steel is standard. Stainless steel flanges are optional.

All Welded Design

These include Types 400, 500, 510, 311, 310, 330 and 320 series. Types 400 and 500 are comprised of a top housing, a diaphragm and bottom housing. These three components are welded together. 316 Stainless Steel top housing is standard. Other top housing materials are available. For Monel diaphragm and bottom housings, the top housing is Monel. Titanium diaphragms must be welded to Titanium top housing and bottom housing. Type 400 series is furnished with clamp rings. High pressure clamp rings are an available option.

Pressure Ratings

The maximum allowable pressure of the seal must be greater than the maximum pressure of the pressure sensing instrument. Maximum allowable pressure for all materials decreases as temperature increases. Plastic bottom housings will not withstand same pressures as their metal equivalents. Flanged seals are limited to the maximum allowable pressure of the flange as per ASME/ANSI B16.5.

The bottom housing and diaphragm are in direct contact with the process, therefore, they must be compatible with the process media. Refer to Ashcroft's Corrosion Guide for more information on material compatibility.

ASHCROFT®

Selection Information
Ashcroft Diaphragm Seals
Clamped Designs

CAPSULE TYPE 100 SERIES	WELDED OR BONDED TYPE 200 SERIES	CLAMPED TYPE 300 SERIES	WELDED TYPE 700 SERIES
DESIGN A metallic diaphragm is *threaded* to a top housing. The top housing and metallic diaphragm are then clamped to the bottom housing.	**DESIGN** A metallic *or* elastomeric diaphragm is *welded* or *bonded* to a top housing. The top housing and diaphragm are then clamped to the bottom housing.	**DESIGN** An elastomeric diaphragm is securely *clamped* between the top and the bottom housing.	**DESIGN** A metallic diaphragm is *welded* to a top housing. The top housing and diaphragm are then securely clamped to the bottom housing.
TOP HOUSING Materials: Standard: Nickel plated carbon steel Options: • 316 Stainless Steel (XYT)	**TOP HOUSING** Materials: Standard: Nickel plated carbon steel Options: • 316 Stainless Steel (XYT) • Monel (XYM) is *required* for Monel diaphragms • Titanium top housing is standard for Titanium diaphragms	**TOP HOUSING** Materials: Standard: Nickel plated carbon steel Options: • 316 Stainless Steel (XYT)	**TOP HOUSING** Materials: Standard: 316 Stainless Steel Options: • Monel is standard for Monel diaphragms • Titanium top housing is standard for Titanium diaphragms
DIAPHRAGM Ashcroft offers a variety of metallic diaphragms.	**DIAPHRAGM** Ashcroft offers a variety of metallic and elastomeric diaphragms.	**DIAPHRAGM** • Viton • Kalrez • Teflon	**DIAPHRAGM** Ashcroft offers a variety of metallic diaphragms.
BOTTOM HOUSINGS Flushing Connections available on types: • 101 • 103 Process connections available: • Threaded • Welded • Flanged • Saddle • In-line Teflon PTFE gasket between the diaphragm and bottom housing assure a corrosion resistance seal. Teflon free assemblies are available. • Ashcroft offers a variety of bottom housing materials	**BOTTOM HOUSINGS** Flushing Connections available on types: • 201 • 203 Process connections available: • Threaded • Welded • Flanged • Saddle • In-line Teflon PTFE gasket between the diaphragm and bottom housing assure a corrosion resistance seal. Teflon free assemblies are available. • Ashcroft offers a variety of bottom housing materials	**BOTTOM HOUSINGS** Flushing Connections available on types: • 301 • 303 Process connections available: • Threaded • Flanged • Ashcroft offers a variety of bottom housing materials	**BOTTOM HOUSINGS** Flushing Connections available on types: • 741 • 703 Process connections available: • Threaded • Flanged • Ashcroft offers a variety of bottom housing materials
FEATURES • Top Housing and instrument can be removed from the process without loss of fill fluid • Continuous duty design • Nickel plated carbon steel bolts standard, 300 Series stainless steel optional • Viton O-ring and Teflon backup plate provide a leak free seal between diaphragm and top housing	**FEATURES** • Top Housing and instrument can be removed from the process without loss of fill fluid • Continuous duty design • Nickel plated carbon steel bolts standard, 300 Series stainless steel optional	**FEATURES** • Top Housing and instrument cannot be removed from the process without loss of fill fluid • Nickel plated carbon steel bolts standard, 300 Series stainless steel optional	**FEATURES** • Top Housing and instrument can be removed from the process without loss of fill fluid • Continuous duty design • Nickel plated carbon steel bolts standard, 300 Series stainless steel optional
APPLICATIONS Designed for a variety of applications that require instrument protection.	**APPLICATIONS** Designed for a variety of applications that require instrument protection.	**APPLICATIONS** Designed for a variety of applications that require instrument protection.	**APPLICATIONS** Designed for low pressure instruments that require high volumetric displacement. Silicone is the recommended fill fluid for such applications.

Consult factory for guidance in product selection
Phone (203) 378-8281 or visit our
web site at www.ashcroft.com

ASHCROFT®

Selection Information
Ashcroft Diaphragm Seals
All Welded Designs

ALL WELDED TYPE 400 & 500 SERIES	ALL WELDED TYPE 510 SERIES	MIDI-SEAL TYPE 311 SERIES	MINI-SEAL TYPE 310 SERIES
DESIGN A metallic diaphragm is welded to a top and bottom housing.	**DESIGN** A metallic diaphragm is welded to a compact top and bottom housing.	**DESIGN** A metallic diaphragm is welded to a compact top and bottom housing.	**DESIGN** A metallic diaphragm is welded to a compact top and bottom housing.
TOP HOUSING Standard: 316 Stainless Steel Options: • Monel • Titanium • Hastelloy C-276 (XHB)	**TOP HOUSING** Standard: 316 Stainless Steel Options: • Monel • Hastelloy C-276 available	**TOP HOUSING** Standard: 316 Stainless Steel	**TOP HOUSING** Standard: 316 Stainless Steel Options: • Monel
DIAPHRAGM Ashcroft offers a variety of metallic diaphragms.	**DIAPHRAGM** • 316 Stainless Steel • Hastelloy C-276 • Monel	**DIAPHRAGM** • 316 Stainless Steel • Hastelloy C-276 • Tantalum	**DIAPHRAGM** • 316 Stainless Steel • Hastelloy C-276 • Monel
BOTTOM HOUSINGS Flushing Connections available on types: • 401 • 403 • 501 Process connections available: • Threaded • Flanged (type 400 only) • Ashcroft offers a variety of bottom housing material	**BOTTOM HOUSINGS** Flushing Connections available on type: • 511 Process connections available: • Threaded ½" NPT Male Materials: • 316L SS • Hastelloy C-276 • Monel	**BOTTOM HOUSINGS** Flushing Connections available on type: • 312 (female process connection only) Process connections available: • Threaded (male and female) Materials: • 316L SS • Hastelloy C-276	**BOTTOM HOUSINGS** Flushing Connections available on type: • 315 (female process connection only) Process connections available: • 316L SS • Hastelloy C-276 • Monel • Hastelloy B
FEATURES Type 400: • Furnished with black epoxy coated clamp rings • Pressure ratings of 4400 PSI. XHP rings rated for 9000 PSI @100°F Type 500: • No rings • Rated for 500 PSI	**FEATURES** • No gaskets or bolts • Light weight • Rated for pressure up to 1500 PSI standard. XHP rated for 5000 PSI high pressure @100°F • Minimized fill fluid • Dual inch and metric wrench flats Characteristics: Compact size and light weight	**FEATURES** • No gaskets or bolts • Light weight • Minimized fill fluid • Rated for 1000 PSI	**FEATURES** • No gaskets or bolts • Light weight • Minimized fill fluid • Rated for 2500 PSI
APPLICATIONS Designed for applications where clamped design is not acceptable such as controlling fugitive emissions and hazardous chemicals applications. It is also recommended where tamper proof design is required.	**APPLICATIONS** Designed for confined spaces, but with enough displacement to be compatible with a variety of pressure sensing instruments.	**APPLICATIONS** Designed for space-restricted area. The all-welded metal construction prevents leaks. Specially designed for 3½" and 4½" gauges with ranges from 15 PSI to 1000 PSI.	**APPLICATIONS** Designed for spaced restricted applications. The all welded metal construction prevents leaks.

ASHCROFT®

Selection Information
Ashcroft Diaphragm Seals

Quick Connection Designs
Iso-Rings and Iso-Spools
Line Assemblies

TYPE 320 & TYPE 330	ISOLATION RINGS TYPE 80 & 81	ISOLATION SPOOLS TYPE 85 & 86	LINE ASSEMBLIES TYPE 1115 CAPILLARIES
Type 320 Type 330	Type 80 Isolation Ring (Wafer) Type 81 Isolation Ring (Bolt Thru)	Type 85 Isolation Spool (Threaded) Type 86 Isolation Spool (Flanged)	Type 1115A Type 1115P
DESIGN A metallic diaphragm is welded to a compact top housing. The top housing is designed for tri-clamp (type 320) or a threaded connection (type 330).	**DESIGN** A flanged metallic ring is lined with an elastomeric inner flexible wall.	**DESIGN** A flanged metallic ring is lined with an elastomeric inner flexible wall. Type 85 is threaded. Type 86 is flanged.	**DESIGN** A 304 capillary is welded to process and instrument connections. A spiral armor shield the assembly.
TOP HOUSING Standard: 316 Stainless Steel Type 320 Compatible with Tri-Clover and Cherry Burrel S line connections.	**FLEXIBLE INNER WALL** Materials: • Buna N • Teflon • Nordell (EPDM) • Viton • Natural Rubber	**FLEXIBLE INNER WALL** Materials: • Buna N • Teflon • Nordell (EPDM) • Viton • Natural Rubber	**ARMOR** Type 1115A is standard stainless steel armor capillary. Type 1115P has PVC sheathing.
DIAPHRAGM • 316 Stainless Steel	**ASSEMBLY FLANGES** Standard: • 316 Stainless Steel • Carbon Steel Optional: • CPVC	**ASSEMBLY FLANGES** Standard: • 316 Stainless Steel • Carbon Steel Optional: • CPVC • Teflon Enveloped	**LENGTHS** Standard line length is five feet. Available in 5´ increments. **TEMPERATURE** Type 1115A: –300ºF to 750ºF Type 1115P: 0ºF to 300ºF
FEATURES Type 320 • Quick Connect design • Quick Connect clamps, gaskets are not supplied • Maximum operating pressure 1000PSI with high pressure clamps Type 330 • Maximum operating pressure 3000 psi • Diaphragm flush with process	**FEATURES** • A standard built-in needle valve means removal of the instrument without loss of fill fluid Characteristics: • From 2˝ sizes to 20˝	**FEATURES** • Type 85 rated for 200PSI • Type 86 available with flat or raised-face flanges. Offered for flanges Classes 150 and 300. Characteristics: • Sizes 1 and 1½˝ Type 86 also available in 2˝	**FEATURES** • Maximum working pressure is 10,000 psi • Variety of connections available
APPLICATIONS Type 320 designed for applications that require easy of mounting and reassembly. Applications including pharmaceutical, dairy, food processing, biotechnology, breweries and others.	**APPLICATIONS** Designed for applications where slurries and clogging are present such as wastewater treatment, pulp and paper, mining and chemical plants.	**APPLICATIONS** Designed for applications where slurries and clogging are present such as wastewater treatment, pulp and paper, mining and chemical plants.	**APPLICATIONS** Typical applications include high temperature applications up to 750ºF, process with pulsation, vibrations & pressure spikes.

ASHCROFT®

Quick Guide
Diaphragm Seals

THREADED

Specification Matrix

Ashcroft Diaphragm Seals & Pressure Instrument Isolators

F = Female
M = Male

● = AVAILABLE

Process Connection Type			Threaded	Threaded w/Flushing Connection	Threaded or Threaded w/Flushing Connection	Threaded or Threaded w/Flushing Connection	Low Pressure Threaded or Threaded w/Flushing Conn.*
Model No.	**Code**		**100/200/300[1]**	**101/201/301[1]**	**400/401[1]**	**500/501[1]**	**740/741[1]**
Process Connection Size	**Female**	**Male**					
¼	25	02	F/M	F/M	F/M	F/M	F
½	50	04	F/M	F/M	F/M	F/M	F
¾	75	06	F/M	F/M	F/M	F/M	F
1	10	08	F/M	F/M	F/M	F/M	F
1½	15						
2	20						
3	30						
4	40						
6	60						
8	80						
Diaphragm Materials							
316L stainless steel	S		100 & 200	101 & 201	•	•	•
304L stainless steel	C		100 & 200	101 & 201			
Monel 400	P		100 & 200	101 & 201	•	•	•
Nickel	N		100 & 200	101 & 201			
Carpenter 20	D		100 & 200	101 & 201			
Tantalum	U		100 & 200	101 & 201	•	•	•
Hastelloy B	G		100 & 200	101 & 201	•	•	•
Hastelloy C 22	J		100 & 200	101 & 201	•	•	•
Hastelloy C 276	H		100 & 200	101 & 201	•	•	•
Teflon	T		200 & 300	201 & 301			
Viton	Y		200 & 300	201 & 301			
Kalrez	K		200 & 300	201 & 301			
Titanium	TI		200	201	•	•	•
Halar Coated Monel	R		100	101			
Bottom Housing Materials							
Steel	B		•	•			•
304L stainless steel	C		•	•			
316L stainless steel	S		•	•	•	•	•
Hastelloy B	G		•	•	•	•	•
Hastelloy C 22	J		•	•	•	•	•
Hastelloy C 276	H		•	•	•	•	•
Carpenter 20	D		•	•			•
Monel 400	M		•	•	•	•	•
Inconel 600	W		•	•			
Nickel	N		•	•			
PVC	V		Only ¼ or ½ NPT				
Kynar	KY		Only ¼ or ½ NPT				
Titanium	TI		•	•	•	•	•
Pressure Ratings [1]							
500 psi			Viton or Kalrez diaph.	Viton or Kalrez diaph.		•	
2500 psi			Metal & Teflon® diaph.	Metal & Teflon® diaph.			750 psi
4400 psi					•		
5000 psi	HP		100 & 200 metal diaph.	101 & 201 metal diaph.	401		
9000 psi	HP				400		
Instrument Connection Size							
¼	02T		•	•	•	•	
½	04T		•	•	•	•	•
Filling Fluid							
Glycerin	CG		•	•	•	•	•[2]
Silicone (direct to 10´ capillary)	CK		•	•	•	•	•
Silicone (over 10´ capillary)	DJ		•	•	•	•	•
Halocarbon	CF		•	•	•	•	•
Syltherm	HA		•	•	•	•	•
Food Grade Silicone	CZ		•	•	•	•	•
Distilled Water	FJ		•	•	•	•	•
Ethylene Glycol & Water	CT		•	•	•	•	•
Propylene Glycol	CV		•	•	•	•	•

[1] See Table A on pages 170-171 for instrument compatibility.
Minimum pressure is determined by the instrument that will be attached to the diaphram seal.

[2] Glycerin not recommended for vacuum, compound or inches of water.

Consult factory for guidance in product selection
Phone (203) 378-8281 or visit our
web site at www.ashcroft.com

ASHCROFT®

THREADED

Specification Matrix

Ashcroft Diaphragm Seals & Pressure Instrument Isolators

F = Female
M = Male

● = AVAILABLE

Process Connection Type			Diaphragm Seal	Diaphragm Seal	Diaphragm Seal (w/Flushing Connection)	Diaphragm Seal (w/Flushing Connection)	Female & Male Threaded
Model No.	Code.		510[1]	510HP[1]	511[1]	511XHP[1]	311[1]
Process Connection Size	Female	Male					
¼	25	02					F/M
½	50	04	M	M	M	M	F/M
¾	75	06					F/M
1	10	08					F/M
1½	15						
2	20						
3	30						
4	40						
6	60						
8	80						
Diaphragm Materials							
316L stainless steel	S		•	•	•	•	•
304L stainless steel	C						
Monel 400	P		•	•	•	•	
Nickel	N						
Carpenter 20	D						
Tantalum	U						•
Hastelloy B	G						
Hastelloy C 22	J						
Hastelloy C 276	H		•	•	•	•	•
Teflon	T						
Viton	Y						
Kalrez	K						
Titanium	TI						
Halar Coated Monel	R						
Bottom Housing Materials							
Steel	B						
304L stainless steel	C						
316L stainless steel	S		•	•	•	•	•
Hastelloy B	G						
Hastelloy C 22	J						
Hastelloy C 276	H		•	•	•	•	•
Carpenter 20	D						
Monel 400	M		•	•	•	•	
Inconel 600	W						
Nickel	N						
PVC	V						
Kynar	KY						
Titanium	TI						
Pressure Ratings [1]							
500 psi							
1000 psi							•
1500 psi			•		•		
2500 psi							
5000 psi	HP			•		•	
9000 psi	HP						
Instrument Connection Size							
¼	02T						•
½	04T		•	•	•	•	•
Filling Fluid							
Glycerin	CG		•	•	•	•	•
Silicone (direct to 10´ capillary)	CK		•	•	•	•	•
Silicone (over 10´ capillary)	DJ		•	•	•	•	•
Halocarbon	CF		•	•	•	•	•
Syltherm	HA		•	•	•	•	•
Food Grade Silicone	CZ		•	•	•	•	•
Distilled Water	FJ		•	•	•	•	•
Ethylene Glycol & Water	CT		•	•	•	•	•
Propylene Glycol	CV		•	•	•	•	•

[1] See Table A on pages 170-171 for instrument compatibility.
Minimum pressure is determined by the instrument that will be attached to the diaphram seal.
[2] Type 300 series not available with metallic diaphragms.
[3] Type 302/303 not available with 1″ process size.

Consult factory for guidance in product selection
Phone (203) 378-8281 or visit our
web site at www.ashcroft.com

ASHCROFT®

Quick Guide
Diaphragm Seals

THREADED

Specification Matrix

Ashcroft Diaphragm Seals & Pressure Instrument Isolators

F = Female
M = Male

● = AVAILABLE

Process Connection Type			Female Threaded (w/Flushing Connection)	Male/Female Threaded Mini (w/Flushing Connection)	1˝ Male Flush Mini	Quick Connect	In-line Threaded
Model No.	**Code**		**312**	**310/315***	**330**	**320/321**	**104/204**
Process Connection Size	**Female**	**Male**					
¼	25	02	F	F/M			F
½	50	04	F	F/M			F
¾	75	06					
1	10	08			M		
1½	15					•	
2	20					•	
3	30						
4	40						
6	60						
8	80						
Diaphragm Materials							
316L stainless steel	S		•	•	•	•	•
304L stainless steel	C						•
Monel 400	P			•			•
Nickel	N						•
Carpenter 20	D						•
Tantalum	U		•				•
Hastelloy B	G			•			•
Hastelloy C 22	J						•
Hastelloy C 276	H		•	•			•
Teflon	T						204
Viton	Y						204
Kalrez	K						204
Titanium	TI						•
Halar Coated Monel	R						104
Bottom Housing Materials							
Steel	B						•
304L stainless steel	C						•
316L stainless steel	S		•	•	•	•	•
Hastelloy B	G			•			•
Hastelloy C 22	J						•
Hastelloy C 276	H		•	•			•
Carpenter 20	D						•
Monel 400	M			•			•
Inconel 600	W						•
Nickel	N						•
PVC	V						
Kynar	KY						
Titanium	TI						•
Pressure Ratings [1]							
500 psi							Viton or Kalrez diaph.
1000 psi			•			•	
2500 psi				•			Metal & Teflon® diaph.
3000 psi					•		
5000 psi	HP						
9000 psi	HP						
Instrument Connection Size							
¼	02T		•	•	•	•	•
½	04T		•	•	•	2˝ only	•
Filling Fluid							
Glycerin	CG		•	•	•	•	•
Silicone (direct to 10´ capillary)	CK		•	•	•	•	•
Silicone (over 10´ capillary)	DJ		•	•	•	•	•
Halocarbon	CF		•	•	•	•	•
Syltherm	HA		•	•	•	•	•
Food Grade Silicone	CZ		•	•	•	•	•
Distilled Water	FJ		•	•	•	•	•
Ethylene Glycol & Water	CT		•	•	•	•	•
Propylene Glycol	CV		•	•	•	•	•

[1] See Table A on pages 170-171 for instrument compatibility.
Minimum pressure is determined by the instrument that will be attached to the diaphram seal.
[2] Type 300 series not available with metallic diaphragms.
[3] Type 302/303 not available with 1˝ process size.

Consult factory for guidance in product selection
Phone (203) 378-8281 or visit our
web site at www.ashcroft.com

ASHCROFT®

Quick Guide
Diaphragm Seals

FLANGED

Specification Matrix

Ashcroft Diaphragm Seals & Pressure Instrument Isolators

F = Female
M = Male

● = AVAILABLE

Process Connection Type		Raised Face Flange	Raised Face Flange w/Flushing Connection	In-Line Flanged	Raised Face Flange *w/Flushing Connection	Low Pressure Flanged *w/Flushing Connection
Model No.	**Code**	**102/202/302[1,2]**	**103/203/303[1,2]**	**106/206**	**402/403***	**702/703***
Process Connection Size						
¼	25					
½	50	•	•	•	•	•
¾	75	•	•	•	•	•
1	10	•	•	•	•	•
1½	15	•	•	•	•	•
2	20	•	•	•	•	•
3	30	•	•	•	•	•
4	40			•		
6	60			•		
8	80			•		
Diaphragm Materials						
316L stainless steel	S	102 & 202	103 & 203	•	•	•
304L stainless steel	C	102 & 202	103 & 203	•		
Monel 400	P	102 & 202	103 & 203	•	•	•
Nickel	N	102 & 202	103 & 203	•		
Carpenter 20	D	102 & 202	103 & 203	•		
Tantalum	U	102 & 202	103 & 203	•	•	•
Hastelloy B	G	102 & 202	103 & 203	•	•	•
Hastelloy C 22	J	102 & 202	103 & 203	•	•	
Hastelloy C 276	H	102 & 202	103 & 203	•	•	•
Teflon	T	202 & 302	203 & 303	206		
Viton	Y	202 & 302	203 & 303	206		
Kalrez	K	202 & 302	203 & 303	206		
Titanium	TI	202	203	206	•	•
Halar Coated Monel	R	102	103	106		
Bottom Housing Materials						
Steel	B	•	•	•		
304L stainless steel	C	•	•	•		
316L stainless steel	S	•	•	•	•	•
Hastelloy B	G	•	•	•	•	•
Hastelloy C 22	J	•	•	•	•	•
Hastelloy C 276	H	•	•	•	•	•
Carpenter 20	D	•	•	•		•
Monel 400	M	•	•	•	•	•
Inconel 600	W	•	•			
Nickel	N	•	•			
PVC	V	1, 1½, 2				
Kynar	KY	1, 1½, 2				
Titanium	TI	•	•		•	•
Pressure Ratings [1]						
500 psi						
2500 psi						
Flange Class						
150, 300, 600, 900 or 1500		•	•	150	•	150, 300, 600
Instrument Connection Size						
¼	02T	•	•	•	•	•
½	04T	•	•	•	•	•
Filling Fluid						
Glycerin	CG	•	•	•	•	•
Silicone (direct to 10´ capillary)	CK	•	•	•	•	•
Silicone (over 10´ capillary)	DJ	•	•	•	•	•
Halocarbon	CF	•	•	•	•	•
Syltherm	HA	•	•	•	•	•
Food Grade Silicone	CZ	•	•	•	•	•
Distilled Water	FJ	•	•	•	•	•
Ethylene Glycol & Water	CT	•	•	•	•	•
Propylene Glycol	CV	•	•	•	•	•

[1] See Table A on pages 170-171 for instrument compatibility.
Minimum pressure is determined by the instrument that will be attached to the diaphram seal.
[2] Type 300 series not available with metallic diaphragms.
[3] Type 302/303 not available with 1˝ process size.

Consult factory for guidance in product selection
Phone (203) 378-8281 or visit our
web site at www.ashcroft.com

ASHCROFT®

Quick Guide
Diaphragm Seals

IN-LINE

Specification Matrix

Ashcroft Diaphragm Seals & Pressure Instrument Isolators

F = Female
M = Male

● = AVAILABLE

		Saddle	In-line Socket Weld	In-line Butt Weld	Isolation Ring	Isolation Spool
		105/205	107/207	108/208	80/81	85/86
Process Connection Size					**Pipe Size (inches)**	**Pipe Size (inches)**
¼	25		•	•	2.0 **Type 80 only**	1.0
½	50		•	•	3.0 12.0	1.5
¾	75		•	•	4.0 14.0	**Type 86 only**
1	10		•	•	5.0 16.0	2.0
1½	15		•	•	6.0 18.0	
2	20		•	•	8.0 20.0	
3	30	3″			10.0	
4	40	4″ and larger				
6	60					
8	80					
Diaphragm Materials					**Inner Flexible Wall**	**Inner Flexible Wall**
316L stainless steel	S	•	•	•	Buna N (E)	Buna N (E)
304L stainless steel	C	•	•	•	Teflon (T)	Teflon (T)
Monel 400	P	•	•	•	Viton (Y)	Viton (Y)
Nickel	N	•	•	•	Natural Rubber (NP)	Natural Rubber (NP)
Carpenter 20	D	•	•	•	Silicone (S)	Silicone (S)
Tantalum	U	•	•	•		
Hastelloy B	G	•	•	•		
Hastelloy C 22	J	•	•	•		
Hastelloy C 276	H	•	•	•		
Teflon	T	205	207	208		
Viton	Y	205	207	208		
Kalrez	K	205	207	208		
Titanium	TI	205	207	208		
Halar Coated Monel	R	105	107	108		
Bottom Housing Materials					**Ass'y. Flanges / Code**	**Ass'y. Flanges / Code**
Steel	B	•	•	•	Carbon Steel (B)	Carbon Steel (B)
304L stainless steel	C	•	•	•	316 SS (S)	316 SS (S)
316L stainless steel	S	•	•	•	CPVC (CP)	CPVC (CP)
Hastelloy B	G	•	•	•	Teflon Enveloped (CT)	Teflon Enveloped (CT)
Hastelloy C 22	J	•	•	•	Polypropylene (P)	Polypropylene (P)
Hastelloy C 276	H	•	•	•		
Carpenter 20	D	•	•	•		
Monel 400	M	•	•	•		
Inconel 600	W	•	•	•		
Nickel	N	•	•	•		
PVC	V					
Kynar	KY					
Titanium	TI					
Pressure Ratings [1]						**Pressure Rating Type 85**
500 psi		Viton or Kalrez diaph. only	Viton or Kalrez diaph. only	Viton or Kalrez diaph. only		2000 psi
2500 psi		Metal & Teflon® diaph.	Metal & Teflon® diaph.	Metal & Teflon® diaph.		
Flange Class						
150, 300, 600, 900 or 1500					150 or 300	150 or 300
Instrument Connection Size						
¼	02T	•	•	•	1/4 NPT (02T)	1/4 NPT (02T)
½	04T	•	•	•	1/2 NPT (04T)	1/2 NPT (04T)
Filling Fluid						
Glycerin	CG	•	•	•	•	•
Silicone (direct to 10′ capillary)	CK	•	•	•	•	•
Silicone (over 10′ capillary)	DJ	•	•	•	•	•
Halocarbon	CF	•	•	•	•	•
Syltherm	HA	•	•	•	•	•
Food Grade Silicone	CZ	•	•	•	•	•
Distilled Water	FJ	•	•	•	•	•
Ethylene Glycol & Water	CT	•	•	•	•	•
Propylene Glycol	CV	•	•	•	•	•

[1] See Table A on pages 170-171 for instrument compatibility.
Minimum pressure is determined by the instrument that will be attached to the diaphram seal.
[2] Type 300 series not available with metallic diaphragms.
[3] Type 302/303 not available with 1″ process size.

ASHCROFT®

Diaphragm Seal
Flanged Process Connection
Types 102, 202, 302 Series, Flushing Conn. 103, 203, 303

The comprehensive line of Ashcroft Seals will meet a variety of applications and installation requirements. Over 30,000 configurations are possible with connections types, diaphragm and bottom housing materials. Fill port is standard in all designs.

Features:

- A thin Teflon PTFE gasket between the diaphragm and the bottom housing ensures a leak-tight, corrosion resistant seal.
- Flanges are nickel plated carbon steel 316SS flanges are available.

Types 102/103 *are top housing and diaphragm capsule designs.* The diaphragm capsule is threaded to the top housing. The diaphragm and top housing are then clamped to the bottom housing. Viton O-ring, compatible with all fill fluid and Teflon backup ring provide a seal between the diaphragm capsule and the top housing.

Types 202/203 *are welded or bonded designs.* Metallic diaphragms are *welded* to the top housing. Elastomeric diaphragms are *bonded* to the top housing. The diaphragm and top housings are then clamped to the bottom housing.

Types 302/303 are clamped designs. Elastomeric diaphragms are clamped between the top housing and bottom housing.

Type 102

IN A RUSH? ASK FOR ASHCROFT GOLD SERVICE

SELECTION TABLES*

Table 1 – Process Connection/Type Number

	Process Conn. Size Code – Inches								Type Number		
	Size	1/4	1/2	3/4	1	1 1/2	2	3		Welded	
Process Connection	Code	25	50	75	10	15	20	30	Capsule	& Bonded	Clamped
Flanged		•	•	•	•	•	•	•	102	202	302
Flanged (with Flushing Connection)		•	•	•	•	•	•	•	103	203	303

Table 2 – Diaphragm Material

Material	Temp. Limits	Code	102/103	202/203	302/303
316L SS		S	•	•	
304 SS		C	•	•	
Monel 400		P	•	•(2)	
Nickel		N	•	•	
Carpenter 20		D	•	•	
Tantalum		U	•	•	
Hastelloy B		G	•	•	
Hastelloy C 22		J	•	•	
Hastelloy C 276		H	•	•	
Titanium		TI	•	•	
Gold Plated 304 SS		W	•		
Teflon	–40/400°F	T		•	•
Viton(1)	–40/350°F	Y		•	•
Kalrez (1)	30/212°F	K		•	•
Halar Coated Monel	–40/300°F	R	•		

Table 3 – Bottom Housing Material(5)

Material	Code	Connection Size	Flange Class	102 & 202	103 & 203	Connection Size	Flange Class	302	303
Steel	B	1/2", 3/4", 1, 1 1/2", 2", 3"	150, 300, 600, 900 & 1500	•	•	1/2", 3/4", 1 1/2"	150, 300	•	•
						2"	150	•	
304 SS	C	1/2", 3/4", 1, 1 1/2", 2", 3"	150, 300, 600, 900 & 1500	•	•	1/2", 3/4", 1 1/2"	150, 300	•	•
						2"	150	•	
316L SS	S	1/2", 3/4", 1, 1 1/2", 2", 3"	150, 300, 600, 900 & 1500	•	•	1/2", 3/4", 1 1/2"	150, 300	•	•
						2"	150	•	
Hastelloy B	G	1/2", 3/4", 1, 1 1/2", 2", 3"	150, 300, 600, 900 & 1500	•	•	1/2", 3/4", 1 1/2"	150, 300	•	•
						2"	150	•	
Hastelloy C 22	J	1/2", 3/4", 1, 1 1/2", 2", 3"	150, 300, 600, 900 & 1500	•	•	1/2", 3/4", 1 1/2"	150, 300	•	•
						2"	150	•	
Hastelloy C 276	H	1/2", 3/4", 1, 1 1/2", 2", 3"	150, 300, 600, 900 & 1500	•	•	1/2", 3/4", 1 1/2"	150, 300	•	•
						2"	150	•	
Carpenter 20	D	1/2", 3/4", 1, 1 1/2", 2", 3"	150, 300, 600, 900 & 1500	•	•	1/2", 3/4", 1 1/2"	150, 300	•	•
						2"	150	•	
Monel 400	M	1/2", 3/4", 1, 1 1/2", 2", 3"	150, 300, 600, 900 & 1500	•	•	1/2", 3/4", 1 1/2"	150, 300	•	•
						2"	150	•	
Inconel 600	W	1/2", 3/4", 1, 1 1/2", 2", 3"	150, 300, 600, 900 & 1500	•	•	1/2", 3/4", 1 1/2"	150, 300	•	•
						2"	150	•	
Nickel	N	1/2", 3/4", 1, 1 1/2", 2", 3"	150, 300, 600, 900 & 1500	•	•	1/2", 3/4", 1 1/2"	150, 300	•	•
						2"	150	•	
Titanium	TI	1/2", 3/4", 1, 1 1/2", 2", 3"	150, 300, 600, 900 & 1500	•	•				
Tantalum Clad SS	SU	1, 1 1/2", 2"	150, 300, 600	•					
Halar Coated Monel(3)	BH	1/2", 3/4", 1, 1 1/2", 2", 3"	150, 300, 600, 900 & 1500	•		1/2", 3/4", 1 1/2"	150, 300	•	
						2"	150	•	
PVC(4)	V	1, 1 1/2", 2"	150	•		1 1/2", 2"	150	•	
Teflon(4)	T	1, 1 1/2", 2"	150	•		1 1/2", 2"	150	•	
Kynar(4)	KY	1, 1 1/2", 2"	150	•		1 1/2", 2"	150	•	

Table 4 – Instrument Connection

Size – NPT	Code
1/4	02T
1/2	04T

*See Table A on page 170-171 for instrument compatibility.

Continued next page

ASHCROFT®

Diaphragm Seal
Flanged Process Connection
Types 102, 202, 302 Series,
Flushing Conn. 103, 203, 303

SELECTION TABLES* (Cont.)

Table 5 – Filling Fluid

Filling	Service	Connection to Instrument	Temperature Limits Range °F	Code
Glycerin	Pressure	Direct Only	0/400	CG
Silicone	Pressure/Vacuum	Direct or Remote Line	–40/600	CK
Halocarbon	Pressure/Vacuum in presence of strong oxidizing agent	Direct or Remote Line	–80/392	CF
Syltherm	Pressure/Vacuum	Direct or Remote Line	–40/750	HA
Food Grade Silicone	Pressure/Vacuum	Direct or Remote Line	–40/500	CZ
Distilled Water	Pressure/Vacuum	Direct or Remote Line	40/185	FJ
Ethylene Glycol & Water	Pressure/Vacuum	Direct or Remote Line	–10/200	CT
Propylene Glycol	Pressure/Vacuum	Direct or Remote Line	–50/325	CV
Mineral Oil	Pressure/Vacuum	Direct or Remote Line	10/400	HY
Silicone 10 CST	Pressure/Vacuum	Direct or Remote Line	–40/500	DJ

Table 6 – Optional Features

See page 168-169 for X variations.

Table 8 – Flange Type

Type	Code	
Raised Face	RF	Standard
Ring Joint	RJ	Optional
Flat Face	FF	Optional

NOTES

(1) Viton and Kalrez diaphragm max. pressure 500 psi.
(2) Type 202, 203 monel diaphragm must be ordered w/ monel top housing (XYM).
(3) Halar coated monel bottom housing Temp. –40°F/300°F.
(4) Bottom housing non-metallic material

Material	Max. Pressure	Temperature
PVC	75 psi	100°F
Teflon Flanged	270 psi	150°F
Kynar	200 psi	180°F

(5) 2500 class flange available upon request

Table 7 – Flange Ratings

Ashcroft flanged diaphragm seals are manufactured in accordance with ASME/ANSI B 16.5.

The chart below indicates maximum allowable working pressures for carbon steel and stainless steel flanged diaphragm seals. This pressure is determined by the flange material, the class of the flange and the temperature the flange will be exposed to.

The diaphragm seal must be rated for a pressure greater than the full scale range of the instrument.

CARBON STEEL FLANGE							STAINLESS STEEL FLANGE (XSE)						
Maximum Allowable Working Pressure (psi)							*Maximum Allowable Working Pressure (psi)*						
Temp.	FLANGE CLASS						Temp.	FLANGE CLASS					
(°F)	150	300	600	900	1500	2500	(°F)	150	300	600	900	1500	2500
<100	285	740	1480	2220	3705	6170	<100	275	720	1440	2160	3600	6000
200	260	675	1350	2025	3375	5625	200	230	600	1200	1800	3000	5000
300	230	655	1315	1970	3280	5470	300	205	540	1075	1615	2690	4480
400	200	635	1270	1900	3170	5280	400	190	495	995	1490	2485	4140
500	170	600	1200	1795	2995	4990	500	170	465	930	1395	2330	3880
600	140	550	1095	1640	2735	4560	600	140	440	885	1325	2210	3680
650	125	535	1075	1610	2685	4475	650	125	430	865	1295	2160	3600
700	110	535	1065	1600	2665	4440	700	110	420	845	1265	2110	3520
750	95	505	1010	1510	2520	4200	750	95	415	825	1240	2065	3440
800	80	410	825	1235	2060	3430	800	80	405	810	1215	2030	3380
850	65	270	535	805	1340	2230	850	65	395	790	1190	1980	3300
900	50	170	345	515	860	1430	900	50	390	780	1165	1945	3240
950	35	105	205	310	515	860	950	35	380	765	1145	1910	3180
10000	20	50	105	155	280	430	10000	20	355	710	1065	1770	2950

TO ORDER 102, 202 & 302 FLANGED SERIES DIAPHRAGM SEAL:

10 - 102 - S S - 04T X CG - _____ - 150 RF

1. Process Connection Type Number
2. Diaphragm Material
3. Bottom Housing Material
4. Instrument Connection
5. Fill Fluid (when attached to instrument)
6. Optional Features (see page 168-169)
7. Flange Class
8. Flange Type

ASHCROFT®

Diaphragm Seal
Threaded Process Connection
Types 100, 200, 300 Series

The comprehensive line of Ashcroft Seals will meet a variety of applications and installation requirements. Over 30,000 configurations are possible with the connections types, diaphragm and bottom housing materials. Fill port is standard in all designs. Rated for pressures up to 2500 psi unless otherwise noted.

Features:

- Rated up to 2500 psi unless stated otherwise. Optional maximum allowable working pressure to 5000 psi. See XHP option for details.
- A thin Teflon PTFE gasket between the diaphragm and the bottom housing ensures a leak-tight, corrosion resistant seal.

Types 100/101. The diaphragm capsule is threaded to the top housing. The diaphragm and top housing are then clamped to the bottom housing. Viton O-ring, compatible with all fill fluid and Teflon backup ring provide a seal between the diaphragm capsule and the top housing.

Types 200/201. *are welded or bonded designs.* Metallic diaphragms are *welded* to the top housing. Elastomeric *diaphragm is bonded* to the top housing. The diaphragm and top housings are then clamped to the bottom housing.

Types 300/301. An elastomeric diaphragms is clamped between the top housing and bottom housing.

Type 100

IN A RUSH? ASK FOR ASHCROFT GOLD SERVICE

SELECTION TABLES*

Table 1 – Process Connection/Type Number(6)

Process Connection(1)	Process Conn. Size Code – Inches: Size	1/4	1/2	3/4	1	1 1/2	Type Number		
	Female	25	50	75	10	15		Welded	
	Male	02	04	06	08		Capsule	& Bonded	Clamped
Threaded		F/M	F/M	F/M	F	F	100	200	300
Threaded (with Flushing Connection)		F/M	F/M	F/M	F	F	101	201	301

Table 2 – Diaphragm Material

Material	Temp. Limits	Code	100/101	200/201	300/301
316L SS		S	•	•	
304 SS		C	•	•	
Monel 400		P	•	•(3)	
Nickel		N	•	•	
Carpenter 20		D	•	•	
Tantalum		U	•	•	
Hastelloy B		G	•	•	
Hastelloy C 22		J	•	•	
Hastelloy C 276		H	•	•	
Titanium		TI	•	•	
Gold Plated 304 SS		W	•		
Teflon	–40/400°F	T		•	•
Viton(4)	–40/350°F	Y		•	•
Kalrez(4)	30/212°F	K		•	•
Halar Coated Monel	–40/300°F	R	•		

Table 3 – Bottom Housing Material(7)

Material	Code
Steel	B
304 SS	C
316L SS	S
Hastelloy B	G
Hastelloy C 22	J
Hastelloy C 276	H
Carpenter 20	D
Monel 400	M
Inconel 600	W
Nickel	N
PVC (2,6,7)	V
Kynar(5,7)	KY
Titanium	TI

Table 4 – Instrument Connection

Connection	Size	Code
Threaded – female NPT	1/4 NPT	02T
Threaded – female NPT	1/2 NPT	04T

Table 5 – Filling Fluid

Filling	Service	Connection to Instrument	Temperature Limits Range °F	Code
Glycerin	Pressure	Direct Only	0/400	CG
Silicone	Pressure/Vacuum	Direct or Remote Line	–40/600	CK
Halocarbon	Pressure/Vacuum in presence of strong oxidizing agent	Direct or Remote Line	–80/392	CF
Syltherm	Pressure/Vacuum	Direct or Remote Line	–40/750	HA
Food Grade Silicone	Pressure/Vacuum	Direct or Remote Line	–40/500	CZ
Distilled Water	Pressure/Vacuum	Direct or Remote Line	40/185	FJ
Ethylene Glycol & Water	Pressure/Vacuum	Direct or Remote Line	–10/200	CT
Propylene Glycol	Pressure/Vacuum	Direct or Remote Line	–50/325	CV
Mineral Oil	Pressure/Vacuum	Direct or Remote Line	10/400	HY
Silicone 10 CST	Pressure/Vacuum	Direct or Remote Line	–40/500	DJ

Table 6 – Optional Features

See page 168-169 for X variations.

NOTES

(1) Male connections available in metallic bottom housings only.

(2) PVC bottom housing.
- Not available on Types 101, 201 or 301
- Ma x. Pressure/Temperature

Max. Pressure	Temp.
200 psi	74°F
125 psi	125°F
80 psi	150°F

(3) Type 200/201 monel diaphragm must be ordered w/monel top housing (XYM).

(4) Viton & Kalrez diaphtagm. Max. pressure 500 psi.

(5) Kynar bottom housing.

Max. Pressure	Temp.
200 psi	180°F

(6) Process connections for for Type 100, 200 PVC bottom housing solvent cement joint to be coded as process connection.

Process Conn. Size	Code
1/4″	SA
1/2″	SB
3/4″	SC
1″	SD

(7) PVC, Kynar both offer only 1/4 & 1/2 NPT process connections.

*See Table A on page 170-171 for instrument compatibility.

TO ORDER 100, 200 & 300 THREADED SERIES DIAPHRAGM SEAL:

10	100	S	S		04T	X	CG	_____

1. Process Connection
   Type Number
2. Diaphragm Material
3. Bottom Housing Material
4. Instrument Connection
5. Fill Fluid (when attached to instrument)
6. Optional Features (see page 168-169)

Consult factory for guidance in product selection
Phone (203) 378-8281 or visit our
web site at www.ashcroft.com

ASHCROFT®

Diaphragm Seal
In-Line Process Connection
Type 104, 204 Threaded
Type 106, 206 Flanged

The comprehensive line of Ashcroft Seals will meet a variety of applications and installation requirements. It also includes the In-line threaded and In-line flanged process connections. These connections are recommended for applications where continuous flow will prevent clogging and buildup of process media. Fill port is standard in all designs in-line threaded rated for pressures rated up to 2500 psi, unless noted otherwise.

Features:

- A thin Teflon PTFE gasket between the diaphragm and the bottom housing ensures a leak-tight, corrosion resistant seal.

Types 104/106 *are top housing and diaphragm capsule designs.* The diaphragm capsule is threaded to the top housing. The diaphragm and top housing are then clamped to the bottom housing. Viton O-ring, compatible with all fill fluid and Teflon backup ring provide a seal between the diaphragm capsule and the top housing.

Types 204/206 *are welded or bonded designs.* Metallic diaphragms are welded to the top housing. Elastomeric diaphragms are bonded to the top housing. The diaphragm and top housings are then clamped to the bottom housing.

SELECTION TABLES*

Table 1 – Process Connection/Type Number

Process Connection	Process Conn. Size Code – Inches: Size	1/4	1/2	3/4	1	1 1/2	2	3	4	6	8	Type Number: Capsule	Welded & Bonded
	Code	25	50	75	10	15	20	30	40	60	80		
In-line – threaded NPT		•	•									104	204
In-line – flanged			•	•	•	•	•	•	•	•	•	106	206

Table 2 – Diaphragm Material

Material	Temp. Limits	Code	104/106	204/206
316L SS		S	•	•
304 SS		C	•	•
Monel 400		P	•	•(2)
Nickel		N	•	•
Carpenter 20		D	•	•
Tantalum		U	•	•
Hastelloy B		G	•	•
Hastelloy C 22		J	•	•
Hastelloy C 276		H	•	•
Titanium		TI	•	•
Teflon	–40/400°F	T		•
Viton(1)	–40/350°F	Y		•
Kalrez(1)	30/212°F	K		•
Halar Coated Monel	–40/300°F	F	•	

Table 3 – Bottom Housing Material

Material	Code	104/106	204/206
Steel	B	•	•
304 SS	C	•	•
316L SS	S	•	•
Hastelloy B	G	•	•
Hastelloy C 22	J	•	•
Hastelloy C 276	H	•	•
Carpenter 20	D	•	•
Monel 400	M	•	•
Inconel 600	W	•	
Nickel	N	•	

Table 4 – Instrument Connection

Connection	Size	Code
Threaded – female NPT	1/4 NPT	02T
Threaded – female NPT	1/2 NPT	04T

Table 5 – Filling Fluid

Filling	Service	Connection to Instrument	Temperature Limits Range °F	Code
Glycerin	Pressure	Direct Only	0/400	CG
Silicone	Pressure/Vacuum	Direct or Remote Line	–40/600	CK
Halocarbon	Pressure/Vacuum in presence of strong oxidizing agent	Direct or Remote Line	–80/392	CF
Syltherm	Pressure/Vacuum	Direct or Remote Line	–40/750	HA
Food Grade Silicone	Pressure/Vacuum	Direct or Remote Line	–40/500	CZ
Distilled Water	Pressure/Vacuum	Direct or Remote Line	40/185	FJ
Ethylene Glycol & Water	Pressure/Vacuum	Direct or Remote Line	20/–325	CT
Propylene Glycol	Pressure/Vacuum	Direct or Remote Line	20/325	CV
Mineral Oil	Pressure/Vacuum	Direct or Remote Line	10/400	HY
Silicone 10 CST	Pressure/Vacuum	Direct or Remote Line	–40/500	DJ

Table 6 – Optional Features

See page 168-169 for X variations.

Table 8 – Flange Type

(for Types 106/206 only)

Type	Code	
Raised Face	RF	Standard
Ring Joint	RJ	Standard
Flat Face	RF	Standard

NOTES

(1) Viton and Kalrez diaphragm max. pressure 500 psi.
(2) Type 202, 203 monel diaphragm *must* be ordered w/monel top housing (XYM).
*See Table A on page 170-171 for instrument compatibility.

TO ORDER 104 & 204 SERIES IN-LINE THREADED PROCESS CONNECTION:

50-104 - S S - 04T X CG -

1. Process Connection Type Number
2. Diaphragm Material
3. Bottom Housing Material
4. Instrument Connection
5. Fill Fluid (when attached to instrument)
6. Optional Features (see page 168-169)

TO ORDER 106 & 206 SERIES IN-LINE FLANGED PROCESS CONNECTION:

10 - 106 - S S - 04T X CG - _____ - 150 RF

1. Process Connection Type Number
2. Diaphragm Material
3. Bottom Housing Material
4. Instrument Connection
5. Fill Fluid (when attached to instrument)
6. Optional Features (see page 168-169)
7. Flange Class *(150 only)*
8. Flange Type

Consult factory for guidance in product selection
Phone (203) 378-8281 or visit our
web site at www.ashcroft.com

ASHCROFT®

Diaphragm Seal
Types 105 & 205 Saddle
Types 107 & 207 Socket Weld
Types 108 & 208 Butt Weld

The comprehensive line of Ashcroft Seals will meet a variety of applications and installation requirements. This includes the In-line threaded, In-line Socket Weld, In-line Butt Weld and In-line Saddle Seal. These connections are recommended to prevent clogging and buildup of process media. Rated for pressures up to 2500 psi, unless noted otherwise.

Features:

- A thin Teflon PTFE gasket between the diaphragm and the bottom housing ensures a leak-tight, corrosion resistant seal.
- Top Housing and pressure instruments are removable.

Types 105, 107 & 108. The diaphragm capsule is threaded to the top housing. The diaphragm and top housing are then clamped to the bottom housing. Viton O-ring, compatible with all fill fluid and Teflon backup ring provide a seal between the diaphragm capsule and the top housing.

Types 205, 207 & 208 *are welded or bonded designs.* Metallic diaphragms are welded to the top housing. Elastomeric diaphragms are bonded to the top housing. The diaphragm and top housings are then clamped to the bottom housing.

SELECTION TABLES*

Table 1 – Process Connection/Type Number

Process Connection	Process Conn. Size Code – Inches: Size	1/4	1/2	3/4	1	1 1/2	2	3	4	6	8	Type Number: Capsule	Welded & Bonded
	Code	25	50	75	10	15	20	30	40	60	80		
Saddle								•	AND LARGER			105	205
In-line – Butt Weld			•	•	•	•	•					108	208
In-line – Socket Weld		•	•	•	•	•	•					107	207

Table 2 – Diaphragm Material

Material	Temp. Limits	Code	105/107/108	205/207/208
316L SS		S	•	•
304 SS		C	•	•
Monel 400		P	•	•(2)
Nickel		N	•	•
Carpenter 20		D	•	•
Tantalum		U	•	•
Hastelloy B		G	•	•
Hastelloy C 22		J	•	•
Hastelloy C 276		H	•	•
Titanium		TI	•	•
Teflon	–40/400°F	T		•
Viton(1)	–40/350°F	Y		•
Kalrez(1)	30/212°F	K		•
Halar Coated Monel	–40/300°F	R	•	

Table 3 – Bottom Housing Material

Material	Code	105/205	107/207	108/208
Steel	B	•	•	•
304 SS	C	•	•	•
316L SS	S	•	•	•
Hastelloy B	G	•	•	•
Hastelloy C 22	J	•	•	•
Hastelloy C 276	H	•	•	•
Carpenter 20	D	•	•	•
Monel 400	M	•	•	•
Inconel 600	W	•	•	•
Nickel	N	•	•	•

Table 4 – Instrument Connection

Connection	Size	Code
Threaded – female NPT	1/4 NPT	02T
Threaded – female NPT	1/2 NPT	04T

Table 5 – Filling Fluid

Filling	Service	Connection to Instrument	Temperature Limits Range °F	Code
Glycerin	Pressure	Direct Only	0/400	CG
Silicone	Pressure/Vacuum	Direct or Remote Line	–40/600	CK
Halocarbon	Pressure/Vacuum in presence of strong oxidizing agent	Direct or Remote Line	–80/392	CF
Syltherm	Pressure/Vacuum	Direct or Remote Line	–40/750	HA
Food Grade Silicone	Pressure/Vacuum	Direct or Remote Line	–40/500	CZ
Distilled Water	Pressure/Vacuum	Direct or Remote Line	40/185	FJ
Ethylene Glycol & Water	Pressure/Vacuum	Direct or Remote Line	20/–325	CT
Propylene Glycol	Pressure/Vacuum	Direct or Remote Line	20/325	CV
Mineral Oil	Pressure/Vacuum	Direct or Remote Line	10/400	HY
Silicone 10 CST	Pressure/Vacuum	Direct or Remote Line	–40/500	DJ

NOTES
(1) Viton and Kalrez diaphragm max. pressure 500 psi.
(2) Type 205, 208 and 207 monel diaphragm must be ordered w/monel top housing (XYM).

*See Table A on page 170-171 for instrument compatibility.

TO ORDER 105/205, 107/207, 108/208 SERIES DIAPHRAGM SEAL:

20 - 108 - S S - 04T - X CG - _____

1. Process Connection / Type Number
2. Diaphragm Material
3. Bottom Housing Material
4. Instrument Connection
5. Fill Fluid (when attached to instrument)
6. Optional Features (see page 168-169)

Consult factory for guidance in product selection
Phone (203) 378-8281 or visit our
web site at www.ashcroft.com

ASHCROFT®

Diaphragm Seal
Threaded & Flanged
Process Connection
Type 400/500 Series All-Welded

The comprehensive line of Ashcroft Seals will meet a variety of applications and installation requirements.

Features:

- Recommended for applications where clamped design are not acceptable
- Prevent potential leakage of hazardous chemicals
- Tamper proof design
- All stainless steel construction is standard. Other materials available
- Types 401 and 403 are standard with flushing connection

Types 400, 401, 402 and **403** are all welded design with black epoxy painted clamp rings.

Types 500 and **501** are all welded designs. No clamp rings. Type 501 is standard with flushing connection.

Type 400

Type 500

IN A RUSH? ASK FOR ASHCROFT GOLD SERVICE

SELECTION TABLES*

Table 1 – Process Connection/Type Number

Type No.	Process Connection	Process Conn. Size Code – Inches: Size	1/4	1/2	3/4	1	1 1/2	2	3	Pressure Rating
		Female	25	50	75	10	15	20	30	
		Male	02	04	06	08				
400	Threaded		F/M	F/M	F/M	F				4400 psi(1)
401	Threaded (with Flushing Connection)		F	F	F	F				4400 psi(1)
402	Flanged			•	•	•	•	•	•	Per ASME B16.5(2)
403	Flanged (with Flushing Connection)			•	•	•	•	•	•	Per ASME B16.5(2)
500	Threaded		F/M	F/M	F/M	F/M				500 psi
501	Threaded (with Flushing Connection)		F/M	F	F	F				500 psi

Table 2 – Diaphragm Material

Material	Temp. Limits	Code	
316L SS		S	•
Hastelloy B		G	•
Hastelloy C 22		J	•
Hastelloy C 276		H	•
Tantalum(3)		U	•
Monel 400		M	•
Titanium		TI	•

Table 3 – Bottom Housing Materials

Bottom Material	Code	Top Material
316L SS	S	316L SS
Hastelloy B	G	316L SS
Hastelloy C 22	J	316L SS
Hastelloy C 276	H	316L SS
Monel	M	Monel
Titanium(4)	TI	Titanium

Table 4 – Instrument Connection

Size	Code
1/4 NPT	02T
1/2 NPT	04T

Table 5 – Filling Fluid

Filling	Service	Connection to Instrument	Temperature Limits Range °F	Code
Glycerin	Pressure	Direct Only	0/400	CG
Silicone	Pressure/Vacuum	Direct or Remote Line	–40/600	CK
Halocarbon	Pressure/Vacuum in presence of strong oxidizing agent	Direct or Remote Line	–80/392	CF
Syltherm	Pressure/Vacuum	Direct or Remote Line	–40/750	HA
Food Grade Silicone	Pressure/Vacuum	Direct or Remote Line	–40/500	CZ
Distilled Water	Pressure/Vacuum	Direct or Remote Line	40/185	FJ
Ethylene Glycol & Water	Pressure/Vacuum	Direct or Remote Line	20/–325	CT
Propylene Glycol	Pressure/Vacuum	Direct or Remote Line	20/325	CV
Mineral Oil	Pressure/Vacuum	Direct or Remote Line	10/400	HY
Silicone 10 CST	Pressure/Vacuum	Direct or Remote Line	–40/500	DJ

Table 8 – Flange Types for 402 & 403 Only

Type	Code	
Raised Face	RF	Standard
Ring Joint	RJ	Optional
Flat Face	FF	Optional

NOTES:

(1) Type 400 XHP rated to 9000 psi.
Type 401 XHP rated to 5000 psi.

(2) Flange ratings 150 class through 1500 class.

(3) Not available with monel or titanium bottom housing.

(4) Supplied with titanium top housing.

*See Table A on pages 170-171 for instrument compatibility. Minimum pressure is determined by the instrument that will be attached to the diaphragm seal.

TO ORDER THREADED TYPE 400, 401, 500 & 501 SERIES PROCESS CONNECTION:

10-400 - S S - 04T - X CG - _____

1. Process Connection Type Number
2. Diaphragm Material
3. Bottom Housing Material
4. Instrument Connection
5. Fill Fluid (when attached to instrument)
6. Optional Features (see page 168-169)

TO ORDER FLANGED TYPE 402 & 403 SERIES PROCESS CONNECTION:

20 - 402 - S S - 04T - X CG - _____ -150 RF

1. Process Connection Type Number
2. Diaphragm Material
3. Bottom Housing Material
4. Instrument Connection
5. Fill Fluid (when attached to instrument)
6. Optional Features (see page 168-169)
7. See page 153 for flange ratings
8. Flange Type

Consult factory for guidance in product selection
Phone (203) 378-8281 or visit our
web site at www.ashcroft.com

ASHCROFT®

Diaphragm Seal
Threaded Process Connection
Types 510/511 Series, All Welded

This compact seal is small enough in design to be used in confined spaces, but provides sufficient displacement to drive a wide variety of instrumentation. Its all-welded tamper proof design prevents possible process media leakage.

FEATURES:

- Compact size
- Light weight
- All-welded design
- Continuous duty design
- Minimized fill volume
- Male connections eliminate adapters/fittings
- Type 511 furnished with 1/8 NPT flushing connection
- Dual inch and metric wrench flats

ADDITIONAL SPECIFICATIONS

Pressure Rating
1500 psi @ 100°F
Optional 5000 psi @ 100°F (XHP)

Accuracy (typical)
Seal will add ½% to the stated full scale accuracy of the instrument attached.

SELECTION TABLES*

Table 1 – Process Connection

Process Connection	Code
Threaded – 1/2 NPT male	04

Table 2 – Diaphragm Materials

Material	Temp. Limits	Code
316L stainless steel		S
Hastelloy C276(2)		H
Monel(1)		M

Table 3 – Bottom Housing Materials

Material	Code
316L stainless steel	S
Monel	M
Hastelloy C276	H

Table 4 – Instrument Connection

Size-NPT	Code
1/2	04T

Table 5 – Filling Fluid

Filling	Service	Connection to Instrument	Temperature Limits Range °F	Code
Glycerin	Pressure	Direct Only	0/400	CG
Silicone	Pressure/Vacuum	Direct or Remote Line	–40/600	CK
Halocarbon	Pressure/Vacuum in presence of strong oxidizing agent	Direct or Remote Line	–80/392	CF
Syltherm	Pressure/Vacuum	Direct or Remote Line	–40/750	HA
Food Grade Silicone	Pressure/Vacuum	Direct or Remote Line	–40/500	CZ
Distilled Water	Pressure/Vacuum	Direct or Remote Line	40/185	FJ
Ethylene Glycol & Water	Pressure/Vacuum	Direct or Remote Line	20/–325	CT
Propylene Glycol	Pressure/Vacuum	Direct or Remote Line	20/325	CV
Mineral Oil	Pressure/Vacuum	Direct or Remote Line	10/400	HY
Silicone 10 CST	Pressure/Vacuum	Direct or Remote Line	–40/500	DJ

NOTES:

(1) Available only with monel top and bottom housing.

(2) Available with hastelloy top and bottom housing.

*See Table A on pages 170-171 for instrument compatibility.

TO ORDER THIS TYPE 510 / 511 SERIES THREADED PROCESS CONNECTION:

04 - 510 - S S - *04T* - X CG - _____

1. Process Connection Type Number
2. Diaphragm Material
3. Bottom Housing Material
4. Instrument Connection
5. Fill Fluid (when attached to instrument)
6. Optional Features (see page 168-169)

Consult factory for guidance in product selection
Phone (203) 378-8281 or visit our
web site at www.ashcroft.com

ASHCROFT®

Diaphragm Seal
Threaded Process Connection
Type 311/312 All Welded
Midi-Diaphragm Seal

This compact isolator is small enough in design to be used in space restricted areas, with sufficient displacement to drive 3½″ and 4½″ gauges with ranges from 30 psi to 1000 psi.

ADDITIONAL SPECIFICATIONS

Pressure Rating
15 psi to 1000 psi @ 100°F

FEATURES:

- All welded metal construction, prevents leakage of process media
- No gaskets or bolts
- Top housing material 316L stainless steel standard
- Type 312 furnished with ⅛ NPT flushing connection
- Type 312 not available in male process connections

Type 311

Type 312

IN A RUSH? ASK FOR ASHCROFT GOLD SERVICE

SELECTION TABLES*

Table 1 – Process Connection/Type Number

Type No.	Process Connection	Process Conn. Size Code – Inches					Pressure Rating
		Size	¼	½	¾	1	
		Female	25	50	75	10	
		Male	02	04	06	08	
311	Threaded NPT		F/M	F/M	F	F	1000 psi
312	Threaded NPT (w/Flushing Connection)		F	F			1000 psi

Table 2 – Diaphragm Materials

Materials	Code
316L stainless steel	S
Tantalum	U
Hastelloy C 276	H

Table 3 – Bottom Housing Materials

Materials	Code
316L stainless steel	S
Hastelloy C-276	H

Table 4 – Instrument Connection

Instrument Connection	Size	Code
Threaded – female NPT	¼ NPT	02T
Threaded – female NPT	½ NPT	04T

Table 5 – Filling Fluid

Filling	Service	Connection to Instrument	Temperature Limits Range °F	Code
Glycerin	Pressure	Direct Only	0/400	CG
Silicone	Pressure/Vacuum	Direct or Remote Line	–40/600	CK
Halocarbon	Pressure/Vacuum in presence of strong oxidizing agent	Direct or Remote Line	–80/392	CF
Syltherm	Pressure/Vacuum	Direct or Remote Line	–40/750	HA
Food Grade Silicone	Pressure/Vacuum	Direct or Remote Line	–40/500	CZ
Distilled Water	Pressure/Vacuum	Direct or Remote Line	40/185	FJ
Ethylene Glycol & Water	Pressure/Vacuum	Direct or Remote Line	20/–325	CT
Propylene Glycol	Pressure/Vacuum	Direct or Remote Line	20/325	CV
Mineral Oil	Pressure/Vacuum	Direct or Remote Line	10/400	HY
Silicone 10 CST	Pressure/Vacuum	Direct or Remote Line	–40/500	DJ

NOTES:

*See Table A on pages 170-171 for instrument compatibility.

TO ORDER THIS TYPE 311 / 312 SERIES THREADED PROCESS CONNECTION:

50 - 311 - S S - 04T - X CG - _____

1. Process Connection Type Number
2. Diaphragm Material
3. Bottom Housing Material
4. Instrument Connection
5. Fill Fluid (when attached to instrument)
6. Optional Features (see page 168-169)

Consult factory for guidance in product selection
Phone (203) 378-8281 or visit our
web site at www.ashcroft.com

ASHCROFT®

Diaphragm Seal
Threaded Process Connection
Type 310 & 315 All Welded
Mini-Diaphragm Seal

This compact isolator is designed to fit space restricted areas. Specifically designed to protect from transducer mini switches and 3½″ or smaller gauges.

ADDITIONAL SPECIFICATIONS

Pressure Rating
Rated for 2500 psi at 100°F

FEATURES:

- All welded metal construction, prevents leakage of process media
- Fill/bleed connection is standard
- No gaskets or bolts
- Type 315 furnished with ⅛ NPT flushing connection

Type 310

IN A RUSH? ASK FOR ASHCROFT GOLD SERVICE

SELECTION TABLES*

Table 1 – Process Connection/Type Number

Process Connection	Process Connection Size/Code—Inches: Size	¼	½	Type Number	Pressure Rati
	Female	25	50		
	Male	02	04		
Threaded NPT		F/M	F/M	310	2500 psi @ 100°F
Threaded NPT w/flushing connection		F	F	315	2500 psi @ 100°F

Table 2
Diaphragm Material

Material	Code	310/315
316L stainless steel	S	•
Hastelloy C 27	H	•
Tantalum	U	•
Monel(1)	P	•

Table 3 – Bottom
Bottom Housing Materials

Material	Code	Top Material	310/315
316L SS	S	316L SS	•
Hastelloy C 276	H	316L SS	•
Monel	M	Monel	•
Hastelloy B	G	316 SS	•

Table 4 –
Instrument Connection

Connection	Size	Code
Threaded – female NPT	¼ NPT	02T
Threaded – female NPT	⅛ NPT	01T

Table 5 – Filling Fluid

Filling	Service	Connection to Instrument	Temperature Limits Range °F	Code
Glycerin	Pressure	Direct Only	0/400	CG
Silicone	Pressure/Vacuum	Direct or Remote Line	–40/600	CK
Halocarbon	Pressure/Vacuum in presence of strong oxidizing agent	Direct or Remote Line	–80/392	CF
Syltherm	Pressure/Vacuum	Direct or Remote Line	–40/750	HA
Food Grade Silicone	Pressure/Vacuum	Direct or Remote Line	–40/500	CZ
Distilled Water	Pressure/Vacuum	Direct or Remote Line	40/185	FJ
Ethylene Glycol & Water	Pressure/Vacuum	Direct or Remote Line	20/–325	CT
Propylene Glycol	Pressure/Vacuum	Direct or Remote Line	20/325	CV
Mineral Oil	Pressure/Vacuum	Direct or Remote Line	10/400	HY
Silicone 10 CST	Pressure/Vacuum	Direct or Remote Line	–40/500	DJ

NOTES:

(1) Top housing material is 316L SS (standard). Monel mini-seal standard with monel top housing.

*See Table A on pages 170-171 for instrument compatibility. Minimum pressure is determined by the instrument that will be attached to the diaphragm seal.

TO ORDER THIS TYPE 310 /315 THREADED SERIES PROCESS CONNECTION:

25 - 310 - S S - 02T - X CG - _____

1. Process Connection
   Type Number
2. Diaphragm Material
3. Bottom Housing Material
4. Instrument Connection
5. Fill Fluid (when attached to instrument)
6. Optional Features (see page 168-169)

Consult factory for guidance in product selection
Phone (203) 378-8281 or visit our
web site at www.ashcroft.com

ASHCROFT®

Diaphragm Seal Threaded & Flanged Process Connection Type 700 Series

This large volumetric displacement isolator is designed to drive low pressure gauges, switches and other instruments.

Types 740, 741, 702 and **703** are all welded design. A metallic diaphragm is welded to the top housing. The top housing and diaphragm are then clamped to the bottom housing.

FEATURES:

- Diaphragm is electron beam welded to the top housing
- For applications requiring a large volumetric displacement such as bellows gauges, inches of water ranges and low differential pressure gauges
- For instruments ranging from 10˝ H_2O to 750 psi
- Types 701 and 703 are standard with ¼˝ flushing connection
- Silicone is the recommended fill fluid. Glycerin not recommended with vacuum, inch H_2O, or compound ranges

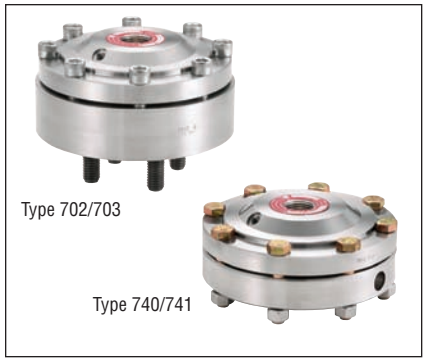

Type 702/703

Type 740/741

SELECTION TABLES*

Table 1 – Process Connection/Type Number

Process Connection	Process Connection Size/Code – Inches[2] Size Code	¼ 25	½ 50	¾ 75	1 10	1½ 15	2 20	3 30	4 40	6 60	8 80	Type No.	Pressure Rating
Threaded NPT		F	F	F	F							740	750 psi
Threaded NPT (with flushing connection)		F	F	F	F							741	750 psi
													Flange Rating
Raised Face Flange			•	•	•	•	•	•				702	150 to large 300 c
Raised Face Flange (with flushing connection)			•	•	•	•	•	•				703	150 o t 300 ss c

Table 2 – Diaphragm Materials

Material	Code	Top Material
316L stainless steel	S	316L SS
Hastelloy B	G	316L SS
Hastelloy C 276	H	316L SS
Tantalum	U	316L SS
Monel[1]	M	Monel 400
Titanium	TI	Titanium

Table 3 – Bottom Housing Materials

Material	Code
Steel	B
316L stainless steel	S
Hastelloy B	G
Hastelloy C 22	J
Hastelloy C 276	H
Carpenter 20	D
Monel	M
Titanium	TI

Table 4 – Instrument Connection

Size – NPT	Code
¼	02T
½	04T

Table 5 – Filling Fluid

Filling	Service	Connection to Instrument	Temperature Limits Range °F	Code
Glycerin	Pressure	Direct Only	0/400	CG
Silicone	Pressure/Vacuum	Direct or Remote Line	–40/600	CK
Halocarbon	Pressure/Vacuum in presence of strong oxidizing agent	Direct or Remote Line	–80/392	CF
Syltherm	Pressure/Vacuum	Direct or Remote Line	–40/750	HA
Food Grade Silicone	Pressure/Vacuum	Direct or Remote Line	–40/500	CZ
Distilled Water	Pressure/Vacuum	Direct or Remote Line	40/185	FJ
Ethylene Glycol & Water	Pressure/Vacuum	Direct or Remote Line	20/–325	CT
Propylene Glycol	Pressure/Vacuum	Direct or Remote Line	20/325	CV
Mineral Oil	Pressure/Vacuum	Direct or Remote Line	10/400	HY
Silicone 10 CST	Pressure/Vacuum	Direct or Remote Line	–40/500	DJ

Table 7 – Flange Class for 702 & 703

150, 300 (see page 170-171 for pressure ratings.)

Table 8 – Flange Types (for 702 & 703 Only)

Type	Code	
Raised Face	RF	Standard
Ring Joint	RJ	Optional
Flat Face	FF	Optional

NOTES:

(1) Monel top housing standard with monel diaphragm.

*See Table A on pages 170-171 for instrument compatibility. Minimum pressure is determined by the instrument that will be attached to the diaphragm seal.

TO ORDER THIS TYPE 740 & 741 THREADED SERIES PROCESS CONNECTION:

50 - 740 - S S - 04T - X CK - _____

1. Process Connection Type Number
2. Diaphragm Material
3. Bottom Housing Material
4. Instrument Connection
5. Fill Fluid (when attached to instrument)
6. Optional Features (see page 168-169)

TO ORDER THIS TYPE 702 & 703 FLANGED SERIES PROCESS CONNECTION:

10 - 702 - S S - 04T - X CK - _____ - 150 RF

1. Process Connection Type Number
2. Diaphragm Material
3. Bottom Housing Material
4. Instrument Connection
5. Fill Fluid (when attached to instrument)
6. Optional Features (see page 168-169)
7. Flange Class
8. Flange Type

Consult factory for guidance in product selection
Phone (203) 378-8281 or visit our
web site at www.ashcroft.com

ASHCROFT®

Diaphragm Seal
Quick-Connect Type 320

The Ashcroft® Type 320 quick-connect diaphragm seal is designed for applications requiring ease of dismantling and reassembly and do not require a 3A standard rating in accordance with sanitary standard 74-00.

Typical applications include the pharmaceutical, dairy, food processing, biotechnology, and filtration markets. Also included are breweries, distilleries, wineries and citrus juice production plants.

ADDITIONAL SPECIFICATIONS:

- The 1½˝-Type 320 is for use on most 3½˝ and smaller size gauges
- The 2˝-Type 320 can be attached to gauges 4½˝ and larger size
- Quick-connect clamps, gaskets or bottom housings are not supplied
- Can be used with pressure instruments such as gauges, switches and transducers
- Maximum operating pressure and temperature is determined by the gaskets and clamping devices used in the piping system

FEATURES:

- Compatible with Tri-Clover and Cherry Burrell S line connections

Type 320

IN A RUSH? ASK FOR ASHCROFT GOLD SERVICE

SELECTION TABLES*

Table 1 – Process Connection

Type Number	Piping System	Code
320	1½˝ (1)	15
320	2˝	20

Table 2 – Diaphragm Materials

Materials	Temp. Limits	Code
316L stainless steel		S
316L stainless steel		S

Table 3 – Bottom Housing Materials(1)

Materials	Code
Non Required	X

Table 4 – Instrument Connection

Connection	Size	Code	320
Threaded – female NPT	¼ NPT	02T	X
Threaded – female NPT	½ NPT	04T	2˝ process conn. only.

Table 5 – Filling Fluid

Filling	Service	Connection to Instrument	Temperature Limits Range °F	Code
Glycerin	Pressure	Direct Only	0/400	CG
Silicone	Pressure/Vacuum	Direct or Remote Line	–40/600	CK
Halocarbon	Pressure/Vacuum in presence of strong oxidizing agent	Direct or Remote Line	–80/392	CF
Syltherm	Pressure/Vacuum	Direct or Remote Line	–40/750	HA
Food Grade Silicone	Pressure/Vacuum	Direct or Remote Line	–40/500	CZ
Distilled Water	Pressure/Vacuum	Direct or Remote Line	40/185	FJ
Ethylene Glycol & Water	Pressure/Vacuum	Direct or Remote Line	20/–325	CT
Propylene Glycol	Pressure/Vacuum	Direct or Remote Line	20/325	CV
Mineral Oil	Pressure/Vacuum	Direct or Remote Line	10/400	HY
Silicone 10 CST	Pressure/Vacuum	Direct or Remote Line	–40/500	DJ

NOTES:

(1) For use with most 3½˝ and smaller gauges. Movementless gauge 4½˝ (exception).

*See Table A on pages 170-171 for instrument compatibility. Minimum pressure is determined by the instrument that will be attached to the diaphragm seal.

TO ORDER THIS QUICK CONNECT TYPE 320 SERIES PROCESS CONNECTION:

15 - 320 - S X - 02T - X CK - _____

1. Process Connection Type Number
2. Diaphragm Material
3. Bottom Housing Material
4. Instrument Connection
5. Fill Fluid (when attached to instrument)
6. Optional Features (see page 168-169)

Consult factory for guidance in product selection
Phone (203) 378-8281 or visit our
web site at www.ashcroft.com

ASHCROFT®

Diaphragm Seal
Flush Threaded Type 330

This compact isolator is designed for applications where the diaphragm must be flush mounted to the process connection.

ADDITIONAL SPECIFICATIONS

- For use on pressure gauges up to 3½″ from 45 to 3000 psi
- Adds an additional 1% tolerance to the gauge

FEATURES

- All welded metal construction, prevents leakage of process media
- Flush design eliminates pockets that could cause clogging or build-up of process media
- Diaphragm area easy to clean up
- Compact size to fit space-restricted areas
- No gaskets or bolts

Type 330

IN A RUSH? ASK FOR ASHCROFT GOLD SERVICE

SELECTION TABLES*

Table 1 – Process Connection

Process Connection	Size	Code
Threaded – male NPT	1″	08

Table 2 – Diaphragm Materials

Materials	Temp. Limits	Code
316L stainless steel		S

Table 3 – Bottom Housing

Materials	Code
Non Required	X

Table 4 – Instrument Connection

Connection	Size	Code
Threaded – female NPT	¼ NPT	02T
Threaded – female NPT	½ NPT	04T

Table 5 – Filling Fluid

Filling	Service	Connection to Instrument	Temperature Limits Range °F	Code
Glycerin	Pressure	Direct Only	0/400	CG
Silicone	Pressure/Vacuum	Direct or Remote Line	–40/600	CK
Halocarbon	Pressure/Vacuum in presence of strong oxidizing agent	Direct or Remote Line	–80/392	CF
Syltherm	Pressure/Vacuum	Direct or Remote Line	–40/750	HA
Food Grade Silicone	Pressure/Vacuum	Direct or Remote Line	–40/500	CZ
Distilled Water	Pressure/Vacuum	Direct or Remote Line	40/185	FJ
Ethylene Glycol & Water	Pressure/Vacuum	Direct or Remote Line	20/–325	CT
Propylene Glycol	Pressure/Vacuum	Direct or Remote Line	20/325	CV
Mineral Oil	Pressure/Vacuum	Direct or Remote Line	10/400	HY
Silicone 10 CST	Pressure/Vacuum	Direct or Remote Line	–40/500	DJ

NOTES:

*See Table A on pages 170-171 for instrument compatibility. Minimum pressure is determined by the instrument that will be attached to the diaphragm seal.

TO ORDER THIS FLUSH TYPE 330 THREADED SERIES PROCESS CONNECTION:

08 - 330 - S X - 02T - X CT - _____

1. Process Connection Type Number
2. Diaphragm Material
3. Bottom Housing Material
4. Instrument Connection
5. Fill Fluid (when attached to instrument)
6. Optional Features (see page 168-169)

Consult factory for guidance in product selection
Phone (203) 378-8281 or visit our
web site at www.ashcroft.com

ASHCROFT®

Isolation Ring
Types 80/81

The isolation ring has a flexible inner cylinder. A 360-degree flexible cylinder means no clogging, assuring reliable and accurate pressure readings. A built-in threaded needle valve is standard. This permits the removal of a pressure instrument for calibration, repair, or replacement without shutting down the process flow. The needle valve also allows for throttling of the process when excessive pulsation is present.

Adaptable to a variety of process conditions and applications, the Ashcroft isolation ring can be used for protection of instrumentation such as pressure gauges, switches, transmitters, recorders and transducers. The isolation ring fits between customer-supplied piping flanges like many butterfly valves, and is available for piping diameters from 2″ to 20″. It can be used at any pressure within the limitations of ASME classes 150 and 300, and even in most vacuum applications.

Type 80 Isolation Ring (Wafer)

Type 81 Isolation Ring (Bolt Thru)

SELECTION TABLES

Table 1 – Pipe Size/Type Number

Size Code	Pipe Size/Code—Inches												Type Number	Housing Material
	1	1½	2	3	4	6	8	10	12	14	16	18	20	
	01	15	02	03	04	06	08	10	12	14	16	18	20	
			•	•	•	•	•	•	•	•	•	•	•	80	Carbon Steel
			•	•	•	•	•	•						81	

Table 2
Inner Flexible Wall[2]

Material	Code	Temp. Limits
Buna N	E	up to 225°F (107°)
Teflon[1]	T	up to 350°F (177°)
Silicone	SI	up to 450°F (232°)
Viton	Y	up to 350°F (177°)
Natural Rubber	NR	up to 225°F (107°

Table 3
Assembly Flanges

Material	Code
Carbon steel	B
316 stainless steel	S
Chlorinated Polyvinyl Chloride	CP

Table 4 –
Instrument Connection

Instrument Connection	Size	Code
Threaded – female NPT	¼	02T
Threaded – female NPT	½	04T

Table 5 – Filling Fluid

Filling	Service	Connection to Instrument	Temperature Limits Range °F	Code
Glycerin	Pressure	Direct Only	0/400	CG
Silicone	Pressure/Vacuum	Direct or Remote Line	–40/600	CK
Halocarbon	Pressure/Vacuum in presence of strong oxidizing agent	Direct or Remote Line	–80/392	CF
Syltherm	Pressure/Vacuum	Direct or Remote Line	–40/750	HA
Food Grade Silicone	Pressure/Vacuum	Direct or Remote Line	–40/500	CZ
Distilled Water	Pressure/Vacuum	Direct or Remote Line	40/185	FJ
Ethylene Glycol & Water	Pressure/Vacuum	Direct or Remote Line	20/–325	CT
Propylene Glycol	Pressure/Vacuum	Direct or Remote Line	20/325	CV
Mineral Oil	Pressure/Vacuum	Direct or Remote Line	10/400	HY
Silicone 10 CST	Pressure/Vacuum	Direct or Remote Line	–40/500	DJ

NOTES:
(1) Not available in sizes 12″ or larger.
(2) Temperature limits of both inner flexible wall and fill fluid must not be exceeded.

TO ORDER THIS ISOLATION RING TYPE 80/81 SERIES:

80 - 02 - E B - 02T - X CG - _____

1. Isolation Ring Type
   Process Connection
2. Flexible Inner Wall Material
3. Assembly Flange Material
4. Instrument Connection
5. Fill Fluid (when attached to instrument)
6. Optional Features (see page 168-169)

Consult factory for guidance in product selection
Phone (203) 378-8281 or visit our
web site at www.ashcroft.com

ASHCROFT®

Isolation Spool Types 85/86

The isolation spool has a flexible inner cylinder. A 360-degree flexible cylinder means no clogging, assuring reliable and accurate pressure readings. A built-in threaded needle valve is provided standard. This permits the removal of a pressure instrument for calibration, repair, or replacement without shutting down the process flow. The needle valve also allows for throttling of the process when excessive pulsation is present.

Adaptable to a variety of process conditions and applications, the Ashcroft isolation spool can be used for protection of instrumentation such as pressure gauges, switches, transmitters and transducers. The isolation spool fits between customer-supplied piping flanges like many butterfly valves, and is available for piping diameters 1″, 1½″ and 2″. It can be used at any pressure within the limitations of ASME classes 150 and 300, and in most vacuum applications.

Type 86 Isolation Spool (Flanged)

Type 85 Isolation Spool (Threaded)

SELECTION TABLES

Table 1 – Pipe Size/Type Number

	Pipe Size/Code—Inches				
Size	1	1½	2	Type Number	Housing Material
Code	01	15	02		
	•	•		85[1]	Carbon Steel
	•	•	•	86[2]	

Table 2 – Inner Flexible Wall[3]

Material	Code	Temp. Limits
Buna N	E	up to 225°F (107°)
Teflon	T	up to 350°F (177°)
Viton	Y	up to 350°F (177°)
Natural Rubber	NR	up to 225°F (107°)

Table 3 Assembly Flanges

Material	Code
Carbon steel	B
316 stainless steel	S
Chlor. Polyvinyl Chloride	CP
Teflon Enveloped	CT
Polypropylene	PP

Table 4 Instrument Connection

Size – NPT	Code
¼	02T
½	04T

Table 7 – Flange Class Available (Type 86 only)

Table 8 – Flange Types (for Type 86 Only)

Type	Code	
Raised Face	RF	Standard
Ring Joint	RJ	Optional

Table 5 – Filling Fluid

Filling	Service	Connection to Instrument	Temperature Limits Range °F	Code
Glycerin	Pressure	Direct Only	0/400	CG
Silicone	Pressure/Vacuum	Direct or Remote Line	–40/600	CK
Halocarbon	Pressure/Vacuum in presence of strong oxidizing agent	Direct or Remote Line	–80/392	CF
Syltherm	Pressure/Vacuum	Direct or Remote Line	–40/750	HA
Food Grade Silicone	Pressure/Vacuum	Direct or Remote Line	–40/500	CZ
Distilled Water	Pressure/Vacuum	Direct or Remote Line	40/185	FJ
Ethylene Glycol & Water	Pressure/Vacuum	Direct or Remote Line	20/–325	CT
Propylene Glycol	Pressure/Vacuum	Direct or Remote Line	20/325	CV
Mineral Oil	Pressure/Vacuum	Direct or Remote Line	10/400	HY
Silicone 10 CST	Pressure/Vacuum	Direct or Remote Line	–40/500	DJ

NOTES:
(1) Female threaded ends.
(2) Flanged ends.
(3) Temperature limits of both inner flexible wall and fill fluid must not be exceeded.

TO ORDER THIS ISOLATION SPOOL TYPE 85 SERIES:

85 - 01 - E B - 02T - X CG - _____

1. Isolation Spool Type / Process Connection Size
2. Flexible Inner Wall Material
3. Assembly Flange Material
4. Instrument Connection
5. Fill Fluid (when attached to instrument)
6. Optional Features (see page 168-169)

TO ORDER THIS ISOLATION SPOOL TYPE 86 FLANGE:

86 - 01 - E B - 02T - X CG - _____ -150 RF

1. Isolation Spool Type / Process Connection Size
2. Flexible Inner Wall Material
3. Assembly Flange Material
4. Instrument Connection
5. Fill Fluid (when attached to instrument)
6. Optional Features
7. Flange Class
8. Flange Type

Consult factory for guidance in product selection
Phone (203) 378-8281 or visit our
web site at www.ashcroft.com

ASHCROFT®

Line Assemblies
Type 1115A/1115P
All Welded

When a gauge is installed on a process line containing hot liquid or gas, one solution to protect the gauge from damage and/or accuracy degradation from elevated temperature is to simply include an extra five feet of capillary (to 600°F process) between the process media and the gauge. The slow rate of heat transfer through the added capillary and dead-ended process fluid will generally protect the gauge from damage and/or accuracy degradation.

Ashcroft® line assemblies are offered in a wide variety of configurations to suit all of your applications. Our standard assembly is in an all welded design of 300 series stainless components. The capillary is 304 stainless steel with an O.D. of .125 x .062 I.D. A spiral wound armor shields the assembly.

1/4″ or 1/2″ male or female connections are available. Other connections available upon request.

FEATURES

- All welded construction
- Type 1115A is our standard stainless steel armored capillary
- Type 1115P stainless steel armored capillary, with the addition of PVC sheathing for maximum corrosion resistance
- The assemblies have standard line lengths of five feet in increments of five feet
- Line lengths in one foot increments are available with one foot being the minimum allowed, 100 feet being the maximum
- Maximum working pressure 10,000 psi
- Temperature limits: –300°F to 750°F

IN A RUSH? ASK FOR ASHCROFT GOLD SERVICE

SELECTION TABLES*

Table 1 – Instrument Connection

NPT	Code
1/4 Female	02
1/2 Female	04
1/4 Male	25
1/2 Male	50

Table 2 – Type

Description	Code
Stainless steel armored capillary	1115A
Stainless steel armored capillary w/PVC sheathing	1115P

Table 3 – Process Connection

NPT	Code
1/4 Female	02
1/2 Female	04
1/4 Male	25
1/2 Male	50

Table 4 – Example Lengths

Example Lengths	Feet	Code
Increments of	1	001
Increments of	5	005
Increments of	25	025
	Max	100

TO ORDER THIS LINE ASSEMBLY TYPE 1115A/1115P SERIES:

50 - 1115A- 04 - 005

1. Instrument Connection
2. Type
3. Process Connection
4. Length

Consult factory for guidance in product selection
Phone (203) 378-8281 or visit our
web site at www.ashcroft.com

ASHCROFT®

Diaphragm Seals
Engineered Assemblies

Unique implementation of pressure measurement and monitoring equipment often requires a *combination* of devices to accomplish the necessary tasks. To meet this end, Ashcroft offers custom engineered assemblies that can include local indication, remote sensing, control and media isolation capabilities. The selection guide below outlines the choices of instruments, isolators an pressure conduits that can be incorporated into the assembly to precisely meet the application requirements.

SELECTION TABLES*

Variation	Seal or Iso-Ring	Siphon	Pulsation Dampner (Chemquip)	Snubber "D" Porosity when Applicable	Flexible Line/Remote Mounting	Multiple Instruments	RECOMMENDED APPLICATIONS
F1		•		•			Where high temperatures and pulsation are present.
F2		•					Where high temperatures is present.
F3	•	•					Where high temperatures is present.
F6	•			•			Where pulsation, vibration and corrosion are present.(1)
F7	•		•				Where pressure spikes, high temperatures or corrosion are present.(1)
F8	•				•		Where remote mounting, pressure spikes or corrosion are present.(1)
F9	•		•		•		Where remote mounting, pressure spikes or corrosion are present.(1)
FA	•			•	•		Where remote mounting, pressure spikes or corrosion are present.(1)
FC		•	•				Where high temperatures and pulsation are present.(2)
FL	•		•				Where pulsation, vibration and corrosion are present.(2)
FN			•				Where pressure spikes are present.
H2					•		Where remote mounting is needed.
H3	•					•	Where multiple instruments are needed.(3)
H5	•					•	Where multiple instruments are needed.(4)
H6	•					•	Where multiple instruments are needed.(5)
H7	•					•	Where multiple instruments are needed.(6)
H8	•					•	Where multiple instruments are needed.(7)
JD				•			Where pulsation is present.(8)
JH				•			Where pulsation is present.(9)

DIAPHRAGM SEAL DISPLACEMENT

Type	Material	MAXIMUM DISPLACEMENT	
		Cubic Inches	Cubic Centimeters
100, 200	Metal	0.07	1.14
200, 300	Teflon	0.14	2.23
200, 300	Viton	0.5	8
300	Kalrez	0.5	8
310	Metal	0.025	0.41
311,312	Metal	0.032	0.52
320 (1½″ process)	Metal	0.025	0.41
320 (2″ process)	Metal	0.07	1.14
330	Metal	0.018	0.41
400	Metal	0.07	1.14
500	Metal	0.07	1.14
702/703	Metal	0.43	7
740/741	Metal	0.43	7

The volumetric displacement of a diaphragm seal is the volume of fill fluid a diaphragm can move. The volume must be greater than the volume needed to obtain full deflection of the pressure sensor. The table below lists Ashcroft diaphragm seals volumetric displacement.

NOTES

(1) Not available with Glycerin fill fluid. Not applicable for gauge type 1188, 1189 & 1490.
(2) Not available with Glycerin fill fluid.
(3) Gauge and Transducer assembly. Not available with Glycerin fill fluid.
(4) Gauge and Instrument assembly.1/2 NPT instrument connections. Not available with Glycerin.
(5) Gauge and 2 instruments.1/2 NPT instrument connections. Not available with Glycerin.
(6) Gauge and Instrument assembly.1/4 NPT instrument connections. Not available with Glycerin.
(7) Gauge and 2 instruments.1/4 NPT instrument connections. Not available with Glycerin.
(8) Snubber Type 1106.
(9) Not available with Glycerin fill fluid. Not applicable for gauge type 1188, 1189 & 1490.

ASHCROFT®

Diaphragm Seals
Options

Ashcroft offers a variety of customization and options to the diaphragm seal line. These additional options are called X-variations.

		FLUSHING OPTIONS				TOP HOUSING OPTIONS			HARDWARE							
		1/2″ Flushing Connection	Dual 1/2″ Flushing Connections	Dual 1/4″ Flushing Connections	Piping Plugs	Hastelloy C 276 Top Housing	Monel 400 Top Housing	316 SS Top Housing	SS Clamping Bolts	SS Rings & Bolts	Hi Pressure Clamp Rings	SS Locking Device	SS Tag	Paper Tag	Teflon Free Seal	Instrument Welded to Seal[(1)]
		AW	DB	DK	PU	HB	YM	YT	SB	SE	HP	LD	NH	NN	N	DU
THREADED	100							•	•	•	•	•	•	•	•	•
	101	•	•	•	•			•	•	•	•	•	•	•	•	•
	200						•	•	•	•	•	•	•	•		•
	201	•	•	•	•		•	•	•	•	•	•	•	•		•
	300							•	•	•		•	•	•		
	301	•	•	•	•			•	•	•		•	•	•		
	104							•	•			•	•	•	•	•
	204							•	•			•	•	•		•
	310												•	•		•
	315				•								•	•		•
	311												•	•		•
	312				•								•	•		•
	330												•	•		•
	400					•	•		•	•	•	•	•	•		•
	401	•	•	•	•	•	•		•	•	•	•	•	•		•
	500						•						•	•		•
	501	•		•	•		•						•	•		•
	510										•		•	•		•
	511				•						•		•	•		•
	740								•				•	•		•
	741	•	•	•	•				•				•	•		•
FLANGED	102							•	•	•	•	•	•	•	•	•
	103	•	•	•	•			•	•	•	•	•	•	•	•	•
	202						•	•	•	•	•	•	•	•		•
	203	•	•	•	•		•	•	•	•	•	•	•	•		•
	302							•	•	•		•	•	•		
	303	•	•	•	•			•	•	•		•	•	•		
	106							•	•	•			•	•	•	•
	206							•	•	•			•	•		•
	402					•	•			•			•	•		•
	403	•	•	•	•	•	•			•			•	•		•
	702								•				•	•		•
	703	•	•	•	•				•				•	•		•
IN-LINE	105								•	•			•	•	•	•
	107							•	•	•			•	•	•	•
	108							•	•	•			•	•	•	•
	205						•	•	•	•			•	•		•
	207						•	•	•	•			•	•		•
	208						•	•	•	•			•	•		•
ISOLATION RINGS	80												•	•		
	81												•	•		
	85												•	•		
	86												•	•		
QUICK CONN.	320												•	•		

(1) Instrument connection and top housing must have like materials.

ASHCROFT®

Diaphragm Seals
Options

Ashcroft offers a variety of customization and options to the diaphragm seal line. These additional options are called X-variations.

		CERTS & TESTS				FLANGE OPTIONS		ISO-RINGS			
		Positive Material Identification	Dye Penetrant Test on Seals	Oxygen Cleaned	NACE[2] Compliant Certificate	Flat Face	Raised Face	Teflon Env. Assembly Flanges	CPVC Assembly Flanges	Iso-Ring without Needle Valve	316SS Center Body for Iso-Rings
		MQ	W1	6B	CD-5	FF	RF	CP	CT	NV	SD
THREADED	100	•	•	•	•		•				
	101	•	•	•	•		•				
	200	•	•	•	•	•	•				
	201	•	•	•	•	•	•				
	300		•	•			•				
	301		•	•			•				
	104	•	•	•	•		•				
	204	•	•	•	•		•				
	310	•	•	•	•						
	315	•	•	•							
	311	•	•	•							
	312	•	•	•							
	330	•	•	•							
	400	•	•	•	•						
	401	•	•	•	•						
	500	•	•	•	•						
	501	•	•	•	•						
	510	•	•	•	•						
	511	•	•	•	•						
	740	•	•	•	•						
	741	•	•	•	•						
FLANGED	102	•	•	•	•	•	•				
	103	•	•	•	•	•	•				
	202	•	•	•	•	•	•				
	203	•	•	•	•	•	•				
	302		•	•		•	•				
	303	•	•	•		•	•				
	106	•	•	•	•	•	•				
	206	•	•	•	•	•	•				
	402	•	•	•	•	•	•				
	403	•	•	•	•	•	•				
	702	•	•	•	•	•	•				
	703	•	•	•	•	•	•				
IN-LINE	105	•	•	•	•						
	107	•	•	•	•						
	108	•	•	•	•						
	205	•	•	•	•						
	207	•	•	•	•						
	208	•		•	•						
ISOLATION RINGS	80				•			•		•	•
	81				•			•		•	•
	85				•			•	•	•	
	86				•	•		•	•	•	
QUICK CONN.	320	•									

(2) See PI page ASH/PI-60C

ASHCROFT®

Min/Max Operating Pressure Guideline For Diaphragm Seals

TABLE A

Process Connection Type	Diaphragm Seal Type	Duragauge & 4½″ & Larger Gauges[2,6]	Unigauge, 2½″ & 3½″, Type 1009[1,6]	1259, 5500/6500[6]	Low Pressure Bellows Gauges (1188 Series)[3,6]
THREADED	100/101/200/201 METAL DIAPH.	15psi & Vac (compound) 30psi to 2500psi (XHP to 5000#)	Vac to 2500 psi (XHP to 5000#)	15psi & Vac (compound) 30psi to 2500psi (XHP to 5000#)	N/A
	200/201/300/301 TEFLON DIAPH.	Vac to 2500psi	Vac to 2500 psi	Vac to 2500 psi	30IWV & 30IWC (compound), 60IWC to 10psi
	200/201/300/301 VITON, OR KALREZ DIAPH.	Vac to 500 psi	Vac to 500 psi	Vac to 500 psi	5IWV & 5IWC (compound), 10IWC to 10psi
	310/315 ("MINI")	N/A	Vac to 2500 psi	N/A	N/A
	311/312 ("MIDI")	15psi & Vac (compound), 30psi to 1000psi	Vac to 1000psi	15psi & Vac (compound), 30psi to 1000psi	N/A
	330 (FLUSH)	N/A	45psi & Vac (compound), 60psi to 3000psi	N/A	N/A
	400/401 (WELDED)	15psi & Vac (comp.) 30psi to 4400psi (400 XHP to 9000psi) (401 XHP to 5000psi)	Vac to 4400psi (400 XHP to 9000psi) (401 XHP to 5000psi)	15psi & Vac (comp.) 30psi to 4400psi (400 XHP to 9000psi) (401 XHP to 5000psi)	N/A
	500/501 (WELDED)	15 psi & Vac (compound) 30psi to 500psi	Vac to 500 psi	15 psi & Vac (compound) 30psi to 500psi	N/A
	510/511	30psi to 1500 psi (XHP to 5000 psi)	30psi to 1500 psi (XHP to 5000 psi)	Vac to 1500 psi (XHP to 5000psi)	N/A
	740/741 (LP)	Vac to 750 psi	Vac to 750 psi	Vac to 750 psi	15IWV & 15IWC, 30IWC to 10psi
IN-LINE THREADED	104/204 METAL DIAPH.	15psi & Vac (compound), 30psi to 2500psi	Vac to 2500 psi	15psi & Vac (compound), 30psi to 2500psi	N/A
	204 TEFLON DIAPH.	Vac to 2500 psi	Vac to 2500 psi	Vac to 2500 psi	30IWV & 30IWC (compound), 60IWC to 10psi
	204 VITON, OR KALREZ DIAPH.	Vac to 500 psi	Vac to 500 psi	Vac to 500 psi	5IWV & 5IWC (compound), 10IWC to 10psi
FLANGED	102/103/202/203/402/403 METAL DIAPH.	15psi & Vac (compound) 30psi to Class 2500# (Per Group 1.1 Materials, Per ASME B16.5-2003)	15psi & Vac (compound) 30psi to Class 2500# (Per Group 1.1 Materials, Per ASME B16.5-2003)	15psi & Vac (compound) 30psi to Class 2500# (Per Group 1.1 Materials, Per ASME B16.5-2003)	N/A
	202/203/302/303 TEFLON DIAPH.	Vac to Class 900# (Per Group 1.1 Materials, Per ASME B16.5-2003)	Vac to Class 900# (Per Group 1.1 Materials, Per ASME B16.5-2003)	Vac to Class 900# (Per Group 1.1 Materials, Per ASME B16.5-2003)	30IWV & 30IWC (compound), 60IWC to 10psi
	202/203/302/303 VITON, OR KALREZ DIAPH.	Vac to Class 150# (Per Group 1.1 Materials, Per ASME B16.5-2003)	Vac to Class 150# (Per Group 1.1 Materials, Per ASME B16.5-2003)	Vac to Class 150# (Per Group 1.1 Materials, Per ASME B16.5-2003)	5IWV & 5IWC (compound), 10IWC to 10psi
	702/703	Vac to Class 300# (Per Group 1.1 Materials, Per ASME B16.5-2003)	Vac to Class 300# (Per Group 1.1 Materials, Per ASME B16.5-2003)	Vac to Class 300# (Per Group 1.1 Materials, Per ASME B16.5-2003)	15IWV & 15IWC (compound), 30IWC to 10psi
IN-LINE FLANGED	106/206-METAL DIAPH.	15psi & Vac (comp.) 30psi to Class 300# (Per Group 1.1 Materials, Per ASME B16.5-2003)	Vac to Class 300# (Per Group 1.1 Materials, Per ASME B16.5-2003)	30 psi to Class 300# (Per Group 1.1 Materials, Per ASME B16.5-2003)	N/A
	206 TEFLON DIAPH.	Vac to Class 300# (Per Group 1.1 Materials, Per ASME B16.5-2003)	Vac to Class 300# (Per Group 1.1 Materials, Per ASME B16.5-2003)	Vac to Class 300# (Per Group 1.1 Materials, Per ASME B16.5-2003)	30IWV & 30IWC (compound), 60IWC to 10psi
	206-VITON OR KALREZ DIAPH.	Vac to Class 150# (Per Group 1.1 Materials, Per ASME B16.5-2003)	Vac to Class 150# (Per Group 1.1 Materials, Per ASME B16.5-2003)	Vac to Class 150# (Per Group 1.1 Materials, Per ASME B16.5-2003)	5IWV & 5IWC (compound), 10IWC to 10psi
IN-LINE SOCKET WELD	107/207-METAL DIAPH.	15psi & Vac (compound), 30psi to 2500psi	15psi & Vac (compound), 30psi to 2500psi	15psi & Vac (compound), 30psi to 2500psi	N/A
	207 TEFLON DIAPH.	Vac to 2500 psi	Vac to 2500 psi	Vac to 2500 psi	30IWV & 30IWC 60IWC to 10psi
	207 VITON, OR KALREZ DIAPH.	Vac to 500 psi	Vac to 500 psi	Vac to 500 psi	5IWV & 5IWC (compound), 10IWC to 10psi
IN-LINE BUTT WELD	108/208-METAL DIAPH.	15 psi & Vac (comp.) 30 psi to 2500 psi	Vac to 2500 psi	Vac to 2500 psi	N/A
	208 TEFLON DIAPH.	Vac to 2500 psi	Vac to 2500 psi	Vac to 2500 psi	30IWV & 30IWC (compound), 60IWC to 10psi
	208 VITON, OR KALREZ DIAPH.	Vac to 500 psi	Vac to 500 psi	Vac to 500 psi	5IWV & 5IWC (compound), 10IWC to 10psi
SADDLE	105/205 META DIAPH.	15 psi & Vac (comp.) 30 psi to 2500 psi	Vac to 2500 psi	Vac to 2500 psi	N/A
	105/205 TEFLON DIAPH.	Vac to 2500 psi	Vac to 2500 psi	Vac to 2500 psi	30IWV & 30IWC (compound), 60IWC to 10psi
	205-VITON, OR KALREZ DIAPH.	Vac to 500 psi	Vac to 500 psi	Vac to 500 psi	5IWV & 5IWC (compound), 10IWC to 10psi
ISOLATION RING	TYPE 80	Vac to Class 300# (Per Group 1.1 Materials, Per ASME B16.5-2003)	Vac to Class 300# (Per Group 1.1 Materials, Per ASME B16.5-2003)	Vac to Class 300# (Per Group 1.1 Materials, Per ASME B16.5-2003)	N/A
	TYPE 81				
	TYPE 85				
	TYPE 86				
QUICK CONNECT TYPE 320	320	Vac to 1000psi (w/High Pressure Clamps) (2″ Tri-Clamp Only)	Vac to 1000psi (with High Pressure Clamps)	Vac to 1000psi (2″ Tri-Clamp Only)	N/A

NOTES: **1.** 1008 not available with seals.
2. 1125/1127/1128 same system as Duragauge, use static pressure of the system to define compatibility.
3. 1188 gauges/seal assemblies NOT available with glycerine.
4. 5503 must be assembled with capillaries.
5. Glycerine NOT available for Vac and compound ranges.
6. Lower limits are guidlines for direct mount only. For remote mount consult factory.

ASHCROFT®

Min/Max Operating Pressure Guideline For Diaphragm Seals

TABLE A (continued)

Process Connection Type	Diaphragm Seal Type	5503 DP Gauge[4]	Digital Gauges[5,6]	Transducers[6]	Switches
THREADED	100/101/200/201 METAL DIAPH.	N/A	Vac to 2500 psi (XHP to 5000#)	Vac to 2500 psi (XHP to 5000#)	6 psi & Above Setpoint
	200/201/300/301 TEFLON DIAPH.	N/A	Vac to 2500 psi	Vac to 2500 psi (XHP to 5000#)	6 psi & Above Setpoint
	200/201/300/301 VITON, OR KALREZ DIAPH.	10 psid to 400 psid	Vac to 500 psi	Vac to 500 psi	10˝H_2O & Above (B Series only) 20˝H_2O & Above All Others
	310/315 ("MINI")	N/A	Vac to 2500 psi	Vac to 2500 psi	6 psi & Above Setpoint
	311/312 ("MIDI")	N/A	Vac, 15 psi to 1000psi	Vac to 1000psi	6 psi & Above Setpoint
	330 (FLUSH)	N/A	Vac, 15 psi to 3000psi	Vac to 3000psi	6 psi & Above Setpoint
	400/401 (WELDED)	N/A	Vac to 4400 psi (400XHP to 9000 psi) (401XHP to 5000 psi)	Vac to 4400 psi (400XHP to 9000 psi) (401XHP to 5000 psi)	6 psi & Above Setpoint
	500/501 (WELDED)	N/A	Vac to 500 psi	Vac to 500 psi	6 psi & Above Setpoint
	510/511	N/A	100psi to 1500psi (XHP to 5000psi)	100psi to 1500psi (XHP to 5000psi)	6 psi & Above Setpoint
	740/741 (LP)	10 psid to 400 psid	Vac to 750 psi	Vac to 750 psi	30˝H_2O & Above Setpoint
IN-LINE THREADED	104/204 METAL DIAPH.	N/A	Vac to 750 psi	Vac to 750 psi	6 psi & Above Setpoint
	204 TEFLON DIAPH.	N/A	Vac to 2500 psi (XHP to 5000#)	Vac to 2500 psi (XHP to 5000#)	6 psi & Above Setpoint
	204/304 VITON, OR KALREZ DIAPH.	10 psid to 400 psid	Vac to 500 psi	Vac to 500 psi	10˝H_2O & Above (B Series only) 20˝H_2O & Above All Others
FLANGED	102/103/202/203/402/ 403 METAL DIAPH.	N/A	Vac to Class 2500# (Per Group 1.1 Materials, Per ASME B16.5-2003)	Vac to Class 2500# (Per Group 1.1 Materials, Per ASME B16.5-2003)	6 psi & Above Setpoint
	202/203/302/303 TEFLON DIAPH.	N/A	Vac to Class 900# (Per Group 1.1 Materials, Per ASME B16.5-2003)	Vac to Class 900# (Per Group 1.1 Materials, Per ASME B16.5-2003)	6 psi & Above Setpoint
	202/203/302/303 VITON, OR KALREZ DIAPH.	10 psid to 400 psid	Vac to Class 150# (Per Group 1.1 Materials, Per ASME B16.5-2003)	Vac to Class 150# (Per Group 1.1 Materials, Per ASME B16.5-2003)	10˝H_2O & Above (B Series only) 20˝H_2O & Above All Others
	702/703	10 psid to Class 300#	Vac to Class 300# (Per Group 1.1 Materials, Per ASME B16.5-2003)	Vac to Class 300# (Per Group 1.1 Materials, Per ASME B16.5-2003)	30˝H_2O & Above Setpoint
IN-LINE FLANGED	106/206-METAL DIAPH.	N/A	Vac to Class 300# (Per Group 1.1 Materials, Per ASME B16.5-2003)	Vac to Class 300# (Per Group 1.1 Materials, Per ASME B16.5-2003)	6 psi & Above Setpoint
	106/206 TEFLON DIAPH.	N/A	Vac to Class 300# (Per Group 1.1 Materials, Per ASME B16.5-2003)	Vac to Class 300# (Per Group 1.1 Materials, Per ASME B16.5-2003)	6 psi & Above Setpoint
	206-VITON OR KALREZ DIAPH.	10 psid to 400 psid	Vac to Class 150# (Per Group 1.1 Materials, Per ASME B16.5-2003)	Vac to Class 150# (Per Group 1.1 Materials, Per ASME B16.5-2003)	6 psi & Above Setpoint
IN-LINE SOCKET WELD	107/207-METAL DIAPH.	N/A	Vac to 2500 psi	Vac to 2500 psi	6 psi & Above Setpoint
	207 TEFLON DIAPH.	N/A	Vac to 2500 psi	Vac to 2500 psi	6 psi & Above Setpoint
	207 VITON, OR KALREZ DIAPH.	10 psid to 400 psid	Vac to 500 psi	Vac to 500 psi	10˝H_2O & Above (B Series only) 20˝H_2O & Above All Others
IN-LINE BUTT WELD	108/208-METAL DIAPH.	N/A	Vac to 2500 psi	Vac to 2500 psi	6 psi & Above Setpoint
	208 TEFLON DIAPH.	N/A	Vac to 2500 psi	Vac to 2500 psi	6 psi & Above Setpoint
	208 VITON, OR KALREZ DIAPH.	10 psid to 400 psid	Vac to 500 psi	Vac to 500 psi	10˝H_2O & Above (B Series only) 20˝H_2O & Above All Others
SADDLE	105/205 META DIAPH.	N/A	Vac to 2500 psi	Vac to 2500 psi	6 psi & Above Setpoint
	105/205 TEFLON DIAPH.	N/A	Vac to 2500 psi	Vac to 2500 psi	6 psi & Above Setpoint
	205-VITON, OR KALREZ DIAPH.	10 psid to 400 psid	Vac to 500 psi	Vac to 500 psi	10˝H_2O & Above (B Series only) 20˝H_2O & Above All Others
ISOLATION RING	TYPE 80	N/A	Vac to Class 300# (Per Group 1.1 Materials, Per ASME B16.5-2003)	Vac to Class 300# (Per Group 1.1 Materials, Per ASME B16.5-2003)	6 psi & Above Setpoint
	TYPE 81				
	TYPE 85				
	TYPE 86				
QUICK CONNECT TYPE 320	320	N/A	Vac to 1000 psi	Vac to 1000 psi	6 psi & Above Setpoint

NOTES: 1. 1008 not available with seals.
2. 1125/1127/1128 same system as Duragauge, use static pressure of the system to define compatibility.
3. 1188 gauges/seal assemblies NOT available with glycerine.
4. 5503 must be assembled with capillaries.
5. Glycerine NOT available for Vac and compound ranges.
6. Lower limits are guidlines for direct mount only. For remote mount consult factory.

ASHCROFT®

Diaphragm Seals Style Chart
Threaded Process Connection

Types 100, 200, 300 – (Clamped) Threaded Process Connection
¼, ½, ¾, **1 NPT**

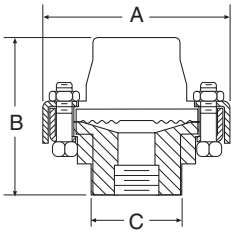

A		B		C	
in	mm	in	mm	in	mm
3¾	(95)	2⅞	(73)	1 13⁄16	(46)

Types 101, 201, 301 – (Clamped) Threaded Process Connection
¼, ½, ¾, **1 NPT** with flushing connection

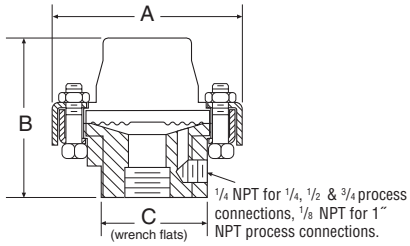

A		B		C	
in	mm	in	mm	in	mm
3¾	(95)	2⅞	(73)	1 13⁄16	(46)

Type 500 All Welded – Threaded Process Connection
¼, ½, ¾, **1 NPT**

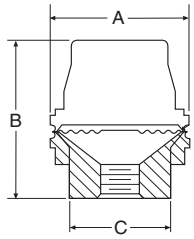

A		B		C	
in	mm	in	mm	in	mm
2½˝	(63)	2⅞	(73)	1 13⁄16	(46)

Type 400 – All Welded Threaded Process Connection
¼, ½, ¾, **1 NPT**

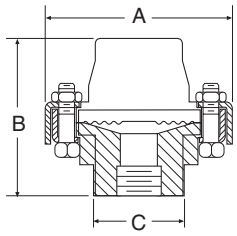

A		B		C	
in	mm	in	mm	in	mm
3¾	(95)	2⅞	(73)	1 13⁄16	(46)

Type 401 – All Welded Threaded Process Connection
¼, ½, ¾, **1 NPT** with flushing connection

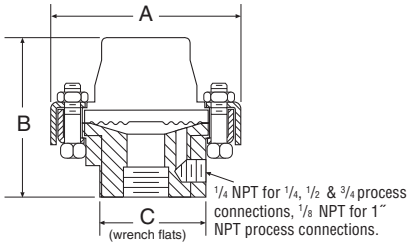

A		B		C	
in	mm	in	mm	in	mm
3¾	(95)	2⅞	(73)	1 13⁄16	(46)

Type 501 – All Welded Threaded Process Connection
¼, ½, ¾, **1 NPT** with flushing connection

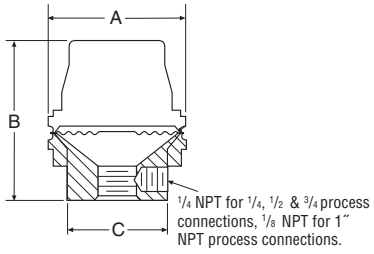

A		B		C	
in	mm	in	mm	in	mm
2½˝	(63)	2⅞	(73)	1 13⁄16	(46)

Type 510 – All Welded Threaded Diaphragm Seal

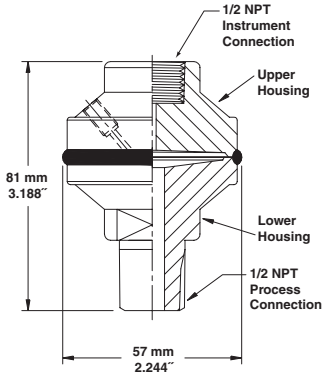

Type 510 XHP – All Welded Threaded High Pressure Diaphragm Seal

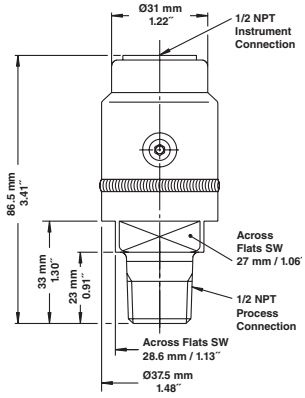

Type 511 – All Welded Threaded Diaphragm Seal with Flushing Connection

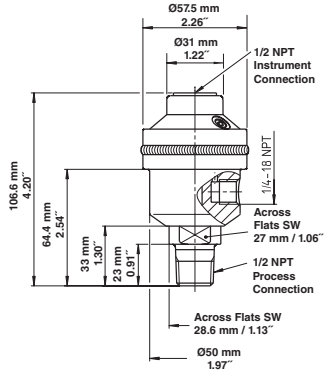

Consult factory for guidance in product selection
Phone (203) 378-8281 or visit our
web site at www.ashcroft.com

ASHCROFT®

Diaphragm Seals Style Chart
Process Connection
Threaded & Flanged

Type 311 Midi-Seal – All Welded Threaded Process Connection Male NPT

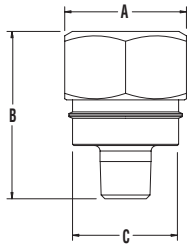

Size	Code	A in	A mm	B in	B mm	C in	C mm
1/4 1/2 3/4 1	02 04 06 08	2	(51)	1 3/8	(35)	1 3/4	(44)

Type 310 Mini-Seal – All Welded Threaded Process Connection ¼, ½ NP

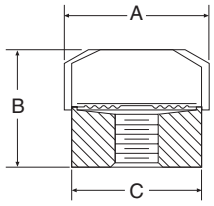

A in	A mm	B in	B mm	C in	C mm
1½	(38)	1 3/16	(30)	1 11/32	(34)

Types 311/312 – All Welded Threaded Process Connection Female NPT

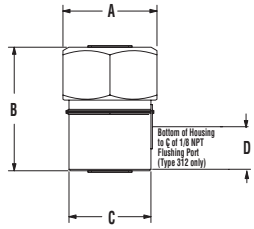

A in	A mm	B in	B mm	C in	C mm	D in	D mm
2.00	(51)	2.65	(67)	1.75	(44)	0.94	(24)

Type 330 Flush Mini-Seal – All Welded Threaded Instrument Connection ¼, ½ NPT

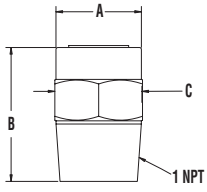

A in	A mm	B in	B mm	C in	C mm
1 11/32"	(34)	24/64	(54)	1 3/8	(35)

Types 740, 741 – High Displacement – Threaded Process Connection ¼, ½, ¾, 1 NPT

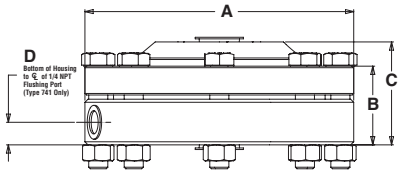

A in	A mm	B in	B mm	C in	C mm	D in	D mm
5.25	(133)	1.5	(38)	2.0	(51)	0.437	(11)

Types 102, 202, 103, 203 – Flanged 1" (raised face only) (1 piece bottom housing) with and without flushing connection

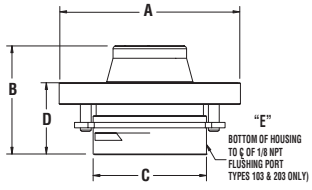

Flange Size	Flange Rating #	A in.	A mm	B in.	B mm	C in.	C mm
1	150 300 or 600	4-1/4 5	(100) (127)	2-9/16	(65)	1-23/32	(69)

Flange Size	Flange Rating #	D in.	D mm	103 & 203 only E in.	E mm
1	150 300 or 600	1-5/8	(41)	3/8	(9)

Types 102, 202, 302 – Flanged Process Connection ½, ¾ NPT

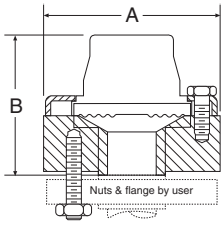

Flange Size	Flange Rating #	A in	A mm	B in	B mm
	150	3½	(89)	2 15/16	(75)
½"	300 or 600	3¾	(95)	3	(76)
	900 or 1500	4¾	(121)	3 3/16	(81)
	150	3⅞	(98)	2 13/16	(71)
¾"	300 or 600	4⅝	(117)	3	(76)
	900 or 1500	5⅛	(130)	3 3/16	(81)

Types 103, 203, 303 – Flanged Process Connection ½, ¾ NPT with flushing connection

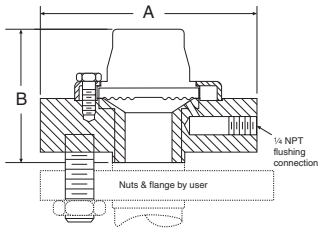

Flange Size	Flange Rating #	A in	A mm	B in	B mm
	150	3½	(89)	2 15/16	(75)
½"	300 or 600	3¾	(95)	3	(76)
	900 or 1500	4¾	(121)	3 3/16	(81)
	150	3⅞	(98)	2 13/16	(71)
¾"	300 or 600	4⅝	(117)	3	(76)
	900 or 1500	5⅛	(130)	3 3/16	(81)

Types 102, 202, 103, 203 – Flanged 1" (raised face only) (1 piece bottom housing) with and without flushing connection

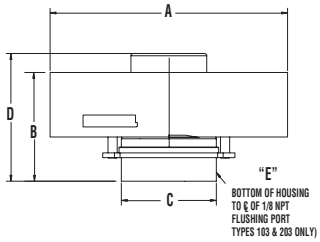

Flange Size	Flange Rating #	A in.	A mm	B in.	B mm	C in.	C mm
1	900 or 1500 2500	5-7/8 6-1/4	(149) (159)	2-7/8	(73)	2-1/4	(57)

Flange Size	Flange Rating #	D in.	D mm	103 & 203 only E in.	E mm
1	900 or 1500 2500	3-3/8	(86)	3/8	(9)

Consult factory for guidance in product selection
Phone (203) 378-8281 or visit our
web site at www.ashcroft.com

ASHCROFT®

Diaphragm Seals Style Chart
Flanged & In-Line
Clamped Designs
Process Connections

Types 102, 202, 302 – Flanged Process Connection – (one piece bottom housing) – 1½″, 2″, 3″ (raised face only) – all materials except PVC, Teflon and Kynar.

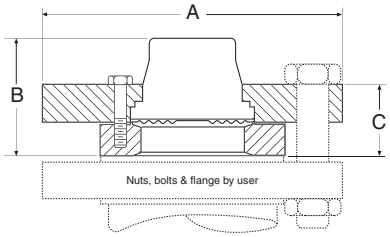

Flange Size	Flange Rating #	A in	A mm	B in	B mm	C in	C mm
1½″	150	5	(127)	2⅜	(61)	1½	(38)
	300 or 600	6¼	(159)			1½	(38)
	900 or 1500	7	(178)			1½	(38)
2″	150	6	(152)	1 15/16	(49)	1⅜	(35)
	300 or 600	6½	(165)			1½	(38)
	900 or 1500	8½	(216)			2⅛	(54)
3″	150	7½	(191)	2	(51)	1⅝	(41)
	300 or 600	8¼	(206)	2 1/16	(52)	1⅞	(47)
	900 or 1500	10½	(267)	2 11/16	(68)	3¼	(82)

Types 102, 202, 302 – Flanged Process Connection – (raised face only) (two piece bottom housing) – 1½″, 2″ – PVC, Teflon & Kynar

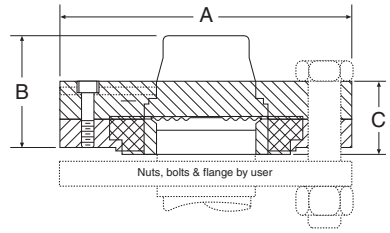

Flange Size	Flange Rating #	A in	A mm	B in	B mm	C in	C mm
1½″	150	5	(127)	2 5/16	(59)	1 13/32	(39)
2″	150	6	(152)	2⅛	(54)	1 9/16	(40)

Types 103, 203, 303 – Flanged 1½, 2″, 3″ (raised face only) (one piece bottom housing with flushing connection)

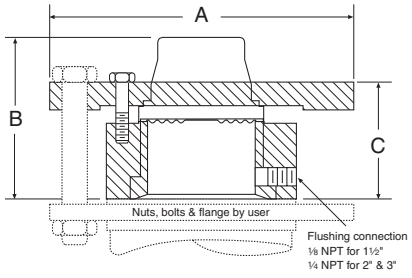

Flange Size	Flange Rating #	A in	A mm	B in	B mm	C in	C mm
1½″	150	5	(127)	3	(76)	2 1/16	(52)
	300 or 600	6¼	(159)				
	900 or 1500	7	(178)				
2″	150	6	(152)	3 11/32	(84)	2⅜	(60)
	300 or 600	6½	(165)				
	900 or 1500	8½	(215)				
3″	150	7½	(191)	3 3/32	(79)	2 7/32	(56)
	300 or 600	8¼	(210)	3 3/16	(81)	2 7/32	(57)
	900	9½	(241)	3 23/32	(94)	2¾	(70)
	1500	10½	(267)				

Types 402, 403 Raised Face – Flanged Process Connection – 1″, 1½″, 2″

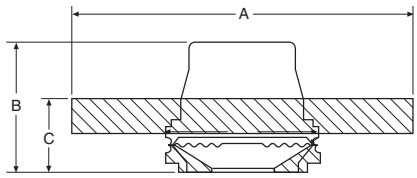

Flange Size	Flange Rating (#)	Type 402 A in	A mm	B in	B mm	C in	C mm
1″	150	4¼	(108)	2⅛	(54)	1 3/16	(30)
	300 or 600	5	(127)			1¼	(32)
	900 or 1500	6	(152)			1¼	(32)
1½″	150	5	(127)	2 7/16	(62)	2 7/16	(62)
	300 or 600	6¼	(159)				
	900 or 1500	7	(178)				
2″	150	6	(152)	2 15/32	(63)	2 15/32	(63)
	300 or 600	6½	(165)				
	900 or 1500	8½	(216)				
		Type 403					
1″	150	4¼	(108)	2⅞	(73)	1 15/16	(49)
	300 or 600	5	(127)			2	(51)
	900 or 1500	6	(152)			2	(51)
1½″	150	5	(127)	2 15/16	(75)	1⅞	(48)
	300 or 600	6¼	(159)				
	900 or 1500	7	(178)				
2″	150	6	(152)	2 15/16	(75)	2 3/16	(56)
	300 or 600	6½	(165)				
	900 or 1500	8½	(216)				

Types 702, 703* High Displacement – Flanged – ½″through 3″

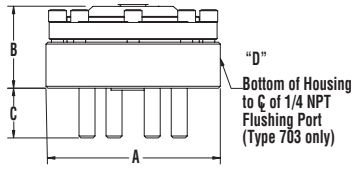

*with flushing connection

Rating # / Size	150# A in.	A mm	B in.	B mm	C in.	C mm	703 Only, All Sizes D in.	D mm
1/2″	5-5/16	(135)	2-9/16	(65)	1-15/32	(37)	1-1/16	(27)
3/4″	5-5/16	(135)	2-9/16	(65)	1-15/32	(37)	1-1/16	(27)
1″	5-5/16	(135)	2-1/2	(64)	1-15/32	(37)	1	(25)
1-1/2″	5-5/16	(135)	2-1/2	(64)	1-15/32	(37)	1	(25)
2″	6	(152)	2-5/8	(67)	2-1/16	(52)	1-1/8	(29)
2-1/2″	7-1/2	(191)	2-1/2	(64)	2-1/16	(52)	1	(25)
3″	7-1/2	(191)	2-3/8	(60)	2-1/16	(52)	1-1/16	(27)

Rating # / Size	300# A in.	A mm	B in.	B mm	C in.	C mm	703 Only, All Sizes D in.	D mm
1/2″	5-5/16	(135)	2-9/16	(65)	1-15/32	(37)	1-1/16	(27)
3/4″	5-5/16	(135)	2-3/4	(70)	2-1/16	(52)	1-1/16	(27)
1″	5-5/16	(135)	2-3/4	(70)	2-1/16	(52)	1	(25)
1-1/2″	6-1/2	(165)	2-3/4	(70)	2-11/16	(68)	1	(25)
2″	6-1/2	(165)	2-5/8	(67)	2-1/16	(52)	1-1/8	(29)
2-1/2″	7-1/2	(191)	2-5/8	(67)	2-11/16	(68)	1	(25)
3″	8-1/2	(216)	2-5/8	(67)	2-11/16	(68)	1-1/16	(27)

Rating # / Size	600# A in.	A mm	B in.	B mm	C in.	C mm	703 Only, All Sizes D in.	D mm
1/2″	5-5/16	(135)	2-3/4	(70)	1-15/32	(37)	1-1/16	(27)
3/4″	5-5/16	(135)	2-3/4	(70)	1-15/32	(37)	1-1/16	(27)
1″	5-5/16	(135)	2-3/4	(70)	1-15/32	(37)	1	(25)
1-1/2″	6-1/2	(165)	2-3/4	(70)	1-15/32	(37)	1	(25)
2″	6-1/2	(165)	2-5/8	(67)	2-1/16	(52)	1-1/8	(29)
2-1/2″	7-1/2	(191)	2-5/8	(67)	2-1/16	(52)	1	(25)
3″	8-1/2	(216)	2-5/8	(67)	2-1/16	(52)	1-1/16	(27)

Types 104, 204, 304 – In-Line Threaded Process Connection – ¼, ½, ¾, 1 NPT

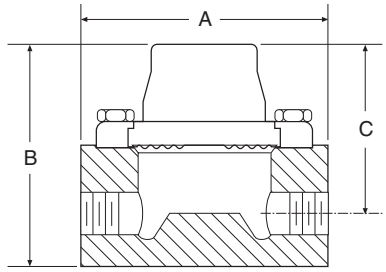

Process Connection	A in	A mm	B in	B mm	C in	C mm
¼ NPT	4	(102)	2⅝	(67)	2⅛	(54)
½ NPT			3⅝	(92)	2¾	(70)
¾ NPT			3⅞	(98)	3	(76)
1 NPT			3⅞	(98)	3	(76)

Types 106, 206 – In-Line Flanged Process Connection – ½″, 1″, 1½″, 2″, 3″

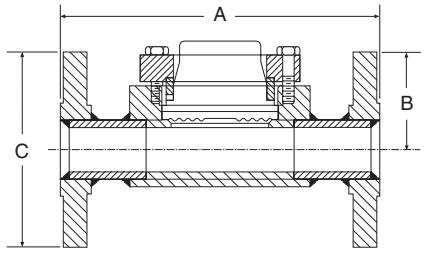

Flange Size	Flange Rating #	A in	A mm	B in	B mm	C in	C mm
½″	150	7	(178)	2 7/16	(62)	3½	(89)
	300	7	(178)			3⅞	(98)
1″	150	7	(178)	2 7/16	(62)	4¼	(108)
	300	8	(203)			4⅞	(123)
1½″	150	8	(203)	2 11/16	(68)	5	(127)
	300	9	(229)			6⅛	(155)
2″	150	9	(229)	2 15/16	(75)	6	(152)
	300	10	(254)			6½	(165)
3″	150	11	(279)	3⅝	(92)	7½	(229)
	300	12	(305)			8¼	(254)

Types 106, 206 – In-Line Flanged – 4″, 6″, 8″

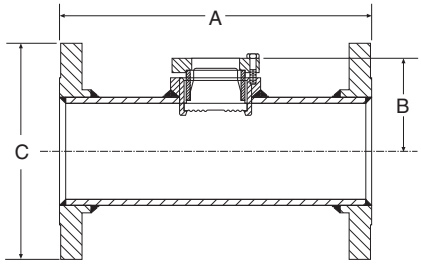

Flange Size	Flange Rating #	A in	A mm	B in	B mm	C in	C mm
4″	150	13	(330)	3⅜	(86)	9	(229)
	300	14	(356)			10	(254)
6″	150	16	(406)	4 7/16	(113)	11	(279)
	300	17	(432)			12½	(318)
8″	150	16	(406)	5 7/16	(138)	13½	(343)

Consult factory for guidance in product selection
Phone (203) 378-8281 or visit our
web site at www.ashcroft.com

ASHCROFT®

Diaphragm Seals Style Chart
Saddle, In-Line, Welded, Butt Welded, Quick Process Connection

Types 105, 205 – Saddle – 3″ Pipe Only Saddle

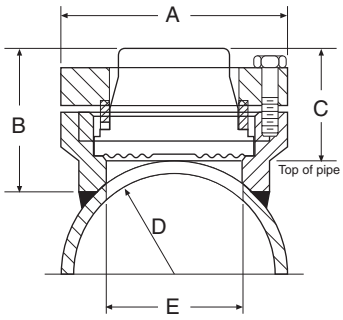

A		B		C		D		E	
in	mm	in	mm	in	mm	in	mm	in	mm
3½	(89)	2¼	(57)	1⅞	(48)	1¾	(44)	2⅛	(54)

Types 105, 205 – Saddle – 4″ Pipe and Large Saddle

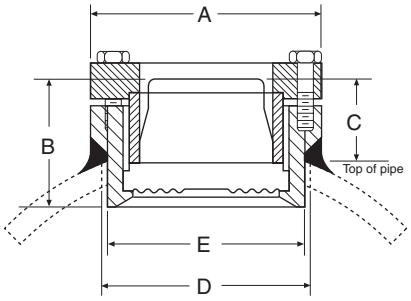

A		B		C		D		E	
in	mm	in	mm	in	mm	in	mm	in	mm
3½	(89)	1 15/16	(50)	1 3/16	(31)	3	(76)	2 31/32	(75)

Types 107, 207 – In-Line Welded Process Connection – ¼″, ½″, ¾″, 1″, 1½″, 2″

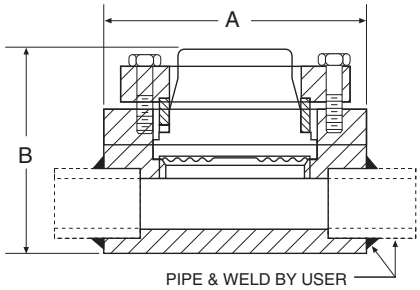

Pipe Size	A		B	
	in	mm	in	mm
¼″	4	(102)	2 11/32	(60)
½″, ¾″			2 11/32	(60)
1″			2 15/32	(63)
1½″			2 23/32	(69)
2″			2 31/32	(75)

Types 108, 208 – Butt-Welded – (Clamped Design) Process Connection – ¼″, ½″, ¾″, 1″, 1½″, 2″

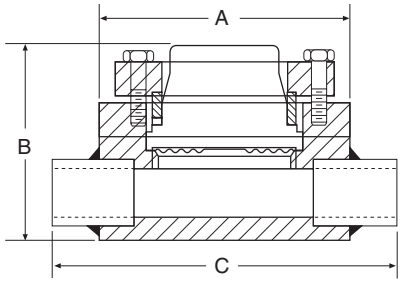

Pipe Size	A		B		C	
	in	mm	in	mm	in	mm
¼″	4	(102)	2 11/32	(60)	6	(153)
½″, ¾″			2 11/32	(60)		
1″			2 15/32	(63)		
1½″			2 23/32	(69)		
2″			2 31/32	(75)		

Type 320 Quick Connect – ¼, ½ NPT

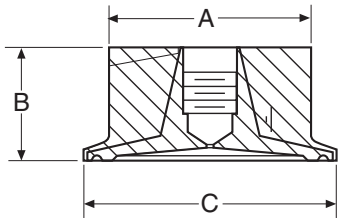

Size*	A		B		C	
	in	mm	in	mm	in	mm
1½″	1 21/32	(42)	7/8	(22)	2	(50)
2″	2	(51)	1⅛	(29)	2½	(63)

ASHCROFT®

Diaphragm Seals Style Chart

- Threaded
- Flanged
- In-line
- Saddle
- Quick-Connect
- All Welded
- Mini-Seal
- Isolation Ring/Isolation Spool

Type 80 Isolation Ring – 2″-20″

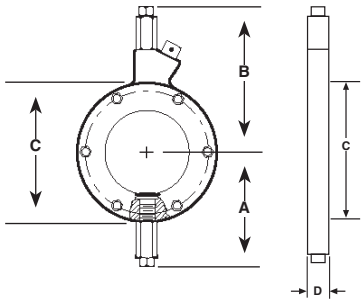

Type 85 Isolation Spool – 1″, 1½″

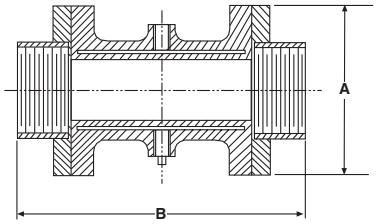

Type 86 Isolation Spool – 1″, 1½″, 2″

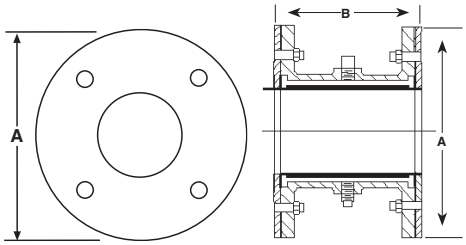

Type 81 Isolation Ring – 2″-10″

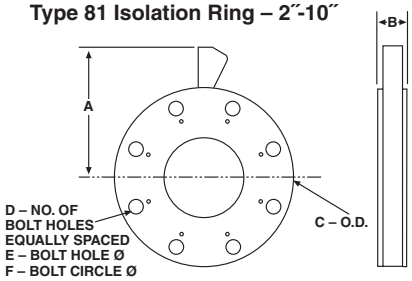

Dimensions: Table A[1]

Type	Nominal Pipe Size	A	B	C	D		Approximate Shipping Weight
					Chlorinated PVC Thickness	Carbon Steel/ 316SS Thickness	
Type 800 Iso-Ring*	2″	3.69″ (94mm)	5.22″ (133mm)	4.22″ (107mm)	2.25″ (57mm)	2.00″ (51mm)	3 lbs (1.35kg)
	3″	4.31″ (110mm)	5.84″ (148mm)	5.47″ (139mm)	2.25″ (57mm)	2.00″ (51mm)	6 lbs (2.7kg)
	4″	4.72″ (120mm)	6.25″ (159mm)	6.28″ (160mm)	1.75″ (44mm)	1.50″ (38mm)	8 lbs (3.6kg)
	6″	5.78″ (147mm)	7.34″ (187mm)	8.44″ (214mm)	1.75″ (44mm)	1.50″ (38mm)	12 lbs (5.4kg)
	8″	6.84″ (174mm)	8.38″ (213mm)	10.53″ (267mm)	1.75″ (44mm)	1.50″ (38mm)	16 lbs (7.3kg)
	10″	7.97″ (202mm)	9.53″ (242mm)	12.81″ (325mm)	1.75″ (44mm)	1.50″ (38mm)	20 lbs (9.7kg)
	12″	9.00″ (229mm)	10.53″ (267mm)	14.84″ (377mm)	N/A	1.75″ (44mm)	25 lbs (11.4kg)
	14″	10.16″ (258mm)	11.72″ (298mm)	17.20″ (437mm)	N/A	1.75″ (44mm)	50 lbs (22.7kg)
	16″	11.19″ (284mm)	12.72″ (323mm)	19.22″ (488mm)	N/A	1.75″ (44mm)	60 lbs (27.2kg)
	18″	12.31″ (313mm)	13.88″ (352mm)	21.50″ (546mm)	N/A	1.75″ (44mm)	70 lbs (31.8kg)
	20″	13.25″ (337mm)	14.78″ (375mm)	23.34″ (593mm)	N/A	1.75″ (44mm)	80 lbs (36.3kg)
Type 850 Iso-Spool (Female Threaded)	1″	3.56″ (90mm)	7.63″ (194mm)				10 lbs (4.5kg)
	1½″	4.38″ (111mm)	7.88″ (200mm)				12 lbs (5.4kg)
Type 860 Iso-Spool (Flanged**)		Class 150	Class 300				Class 150 / Class 300
	1″	4.25″ (108mm)	4.88″ (124mm)	5.38″ (136mm)			8 lbs (3.6kg) / 8 lbs (3.6kg)
	1½″	5″ (127mm)	6.13″ (156mm)	5.38″ (136mm)			10 lbs (4.5kg) / 12 lbs (5.4kg)
	2″	6″ (152mm)	–	5.38″ (136mm)			15 lbs (6.8kg) /

*Centering gages supplied with Iso-Ring.
**Specify FF (Flat Face Flange) or RF (Raised Face Flange) when ordering.
(1) All dimensions ±.12″ (3mm).

Dimensions: Table B

Type	Nominal Pipe Size	A	B	B (w/CPVC End Flanges	C	D	E	F
Type 810 Iso-Ring	2″	5.06″ (129mm)	2.00″ (51mm)	2.25″ (57mm)	6.00″ (152mm)	4	.75″ (19mm)	4.75″ (121mm)
	3″	5.81″ (148mm)	2.00″ (51mm)	2.25″ (57mm)	7.50″ (191mm)	4	.75″ (19mm)	6.00″ (152mm)
	4″	6.56″ (167mm)	1.50″ (38mm)	1.75″ (44mm)	9.00″ (229mm)	8	.75″ (19mm)	7.50″ (191mm)
	6″	7.56″ (192mm)	1.50″ (38mm)	1.75″ (44mm)	13.00″ (330mm)	8	.88″ (22mm)	9.50″ (241mm)
	8″	8.75″ (222mm)	1.50″ (38mm)	1.75″ (44mm)	13.50″ (343mm)	8	.88″ (22mm)	11.75″ (298mm)
	10~	10.00″ (254mm)	1.50″ (38mm)	1.75″ (44mm)	16.00″ (406mm)	12	1.00″ (25mm)	14.25″ (362mm)

Specifications: Table C

	Iso-Ring	Iso-Spool	Code
Housing	Carbon Steel	Carbon Steel	
Assembly Flanges	Carbon Steel 316 StainlessSteel Chlorinated Polyvinyl Chloride[2]	Carbon Steel 316 Stainless Steel Chlorinated Polyvinyl Chloride Teflon Encased[1,3]	B S CP CT
Inner Flexible Wall[4]	Buna N . . . . . up to 225°F (107°C) Teflon[1,2] . . . . . up to 350°F (177°C) Silicone[3]. . . . . up to 450°F (232°C) Viton[1]. . . . . up to 350°F (177°C) White Neoprene . . . . . up to 225°F (107°C) Natural Rubber . . . . . up to 212°F (100°C)		E T SI Y CR NR
Fill Fluid[4]	Glycerin. . . . . 0°F to 400°F (–5°C to 204°C) Silicone . . . . . –40°F to 600°F (–29°C to 316°C) Halocarbon . . . . . –70°F to 300°F (–29°C to 149°C) Food Grade Silicone . . . . . 0°F to 300°F (–5°C to 149°C) Distilled Water. . . . . 45°F to 180°F (– °C to °C) Ethyl Glycol and Water. . . . . –30°F to 220°F (– °C to °C) Propylene Glycol. . . . . –50°F to 200°F (– °C to °C)		CG CK CF CZ FJ CT CV

(1) Trademark of E. I. DuPont de Nemours and Company.
(2) Not available in sizes 12″ or larger .
(3) Iso-Spool only.
(4) Temperature limits of both wall and fill fluid must not be exceeded.

ASHCROFT®

Diaphragm Seals Style Chart

- Threaded
- Flanged
- In-line
- Saddle
- Quick-Connect
- All Welded
- Mini-Seal
- Isolation Ring/Isolation Spool

Type 510 Diaphragm Seal

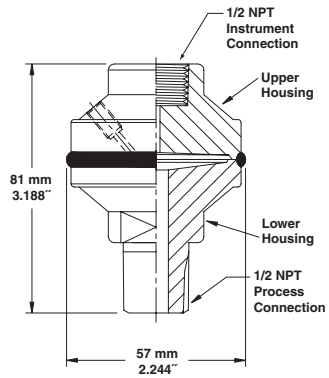

Type 510 High Pressure Diaphragm Seal

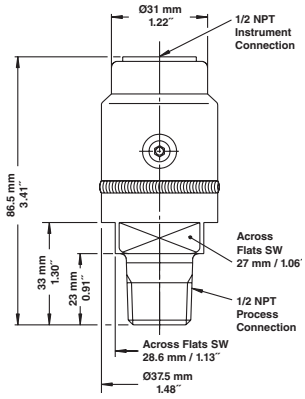

510 Process Connection Thread	Code
1/2 NPT Female	04T
510 Process Connection Thread	Code
1/2 NPT Male	04

Type 511 Low Pressure Diaphragm Seal with Flushing Connection

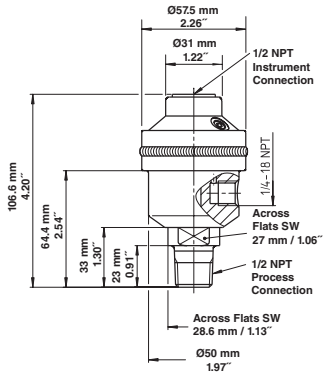

510 Process Connection Thread	Code
1/2 NPT Female	04T
510 Process Connection Thread	Code
1/2 NPT Male	04

Diaphragm Seals Options all Types

Optional Features	Code
316 stainless steel top housing	YT
Stainless steel clamp rings and flanged ring – includes 300 stainless steel clamping bolts (1500 psi max)	SE
300 series stainless steel clamping bolts (maximum pressure is 1500 psi)	SB
Pipe plugs for flushing connections – pipe plugs are available in the same materials as bottom housings.	PU
5000 psi pressure rating – (Type 100/200 only) threaded inlet only, no flushing connection (metal diaphragm only) 7500 psi pressure rating (T-400)	HP
Welded instrument to diaphragm seal	DU
Dual flushing connections (1/2 NPT) (Limited to 2″ thru 3″ flanged seals	DB
Ring joint	RJ
Flat face	FF
No Teflon gasket. Special matching on bottom housing (2)	NX
Clean for gaseous oxygen or strong oxidizing agent applications (3)	6B

Multiple Instruments Attached to Diaphragm Seals

Code	Description
XH3	02L Gauge Connection, 1/4 NPT Transducer, 02T Seal Connection
XH5	04L Gauge Connection, 1/2 NPT Switch, 02T Seal Connection
XH6	04L Gauge Connection, (2) 1/2 NPT Switches, 02T Seal Connection
XH7	02L Gauge Connection, 1/4 NPT Female Switch, 02T Seal Connection
XH8	02L Gauge Connection, (2) 1/4 NPT Instruments, 02T Seal Connection
XH9	02L Gauge Connection, 1/2 NPT Female Switch, 04T Seal Connection
XL3	02L Gauge Connection, 1/4 NPT Female Switch, 02T Seal Connection, 1/4 NPT Snubber (separate line item)

PRESSURE TRANSDUCERS/ TRANSMITTERS

(Refer to product specifications for accuracies)

HIGH PRESSURE

GC31 Digital Pressure Sensor 181

GC35 Digital Pressure Sensor 182

GC51 Rangeable Pressure Transmitter 183

GC55 Wet/Wet Differential Pressure Transmitter 184

T2 High Performance Pressure Transducer 185

G2 Pressure Transducer.....186

A2 Pressure Transmitter.....187

A2X Pressure Transmitter.....188

A4 Pressure Transmitter.....189

H2 Pressure Transducer.....190

KM15 Pressure Transducer.....191

K1 Pressure Transducer/Transmitter 192

K2 Pressure Transducer 193

K8 Pressure Transducer 194

KX Pressure Transducer/Transmitter 195

KS Sanitary Pressure Transducer/ Transmitter 196

LOW PRESSURE

GC30 Digital Differential Pressure Sensor .197

GC52 Rangeable Wet/Wet Differential Pressure Transmitter 198

CXLdp Differential Pressure Transmitter.....199

DXLdp Ultra-Low Pressure Differential Transducer/Transmitter.....200

RXLdp Ultra-Low Differential Pressure Transducer/Transmitter 201

XLdp Ultra-Low Differential PressureTransducer/Transmitter.....202

IXLdp Industrial Ultra-Low Differential Pressure Transducer/Transmitter.....203

ANALOG DISPLAY

Type 2279 Duratran® Transmitter 204

Type DM61 Digital Panel Meter.....205

Type 4080, 4480 Pneumatic Transmitters...206

ASHCROFT®

Model GC31 Ultra-Compact Digital Pressure Sensor

APPLICATIONS

The GC31 utilizes Ashcroft's field proven thin film sensor which provides high cycle life and output stability, typically required in:

- ***Hydraulic presses, stamping equipment, lifts***
- ***Tire press vulcanization, pressure monitoring***
- ***Water, refrigerant or ammonia based cooling systems***
- ***Pressure monitoring on lubrication systems***

FEATURES

- ***Ultra-compact design 1.2˝x 1.2˝ (30mm x 30mm)***
- ***Combined three-in-one digital pressure gauge, switch and transducer***
- ***Simple "Push-Button" configurability allows user to adjust switch settings, analog scaling***
- ***Numerous standard ranges available***

LOOK FOR THIS MARK ON OUR PRODUCTS

PERFORMANCE SPECIFICATIONS

Analog Output (1-5Vdc):
Accuracy: ± 1.0% Span
(accuracy includes effects of linearity, hysteresis and repeatability)
Response Time: 50msec
Output Resolution: 25mV
Analog Scaling: User may configure analog output scaling to any range within full scale of sensor range
Pressure Switch Output:
Type: NPN or PNP open collector up to 30Vdc/80ma
Setting Accuacy: ±1.0% Span
Number of Contacts: 2
Time Delay: 5 msec –2.0 sec (by user)
Hysteresis: Variable (by user)
Switch Setting: User may adjust switch actuation and deadband to any points within full scale sensor range
Display:
Type: 3½ digit, 10mm LED
Accuracy: ± 1.0% Span ± last digit
Display Setting: User may re-configure display scaling, set to capture MIN or MAX value, and adjust display update rate
PSI Ranges:
Standard Ranges (Gauge):
0 to 50 psig, 100 psig, 150 psig, 300 psig, 500 psig, 1000 psig, 1500 psig
Standard Ranges (Compound):
–15 to 75 psig –15 to 150 psig, –15 to 300 psig

ENVIRONMENTAL SPECIFICATIONS

Temperature Limits:
Storage: –22 to 140°F (–30 to 60°C)
Operating: –4 to 140°F (–20 to 60°C)
Compensated: 14 to 122°F (–10 to 50°C)
Temperature Effects:
Zero/Span: ±0.03% Span/F (±0.05% F.S./C) from 73°F (23°C) reference temperature
Humidity: 0-85% RH (Non-Condensing)

FUNCTIONAL SPECIFICATIONS

Proof Pressure: 2X range: 500 psi & below
1.5X range: 1000 psi & above
Burst Pressure: 8X range
Approvals/Certifications: CE, RoHS

ELECTRICAL SPECIFICATIONS

Power Supply Requirements:
Supply Voltage: 11-27Vdc
Current Consumption: 30mA (max)
Switch Contacts: (2) NPN or PNP open collector outputs
NPN Type: 30Vdc / 80mA (max)
PNP Type: voltage drop 1Vdc (max)/80mA (max)

MECHANICAL SPECIFICATIONS

Pressure Connection: ¼ NPT (Male)
Enclosure: ABS, polycarbonate, aluminum
Environmental Rating: IP40
Electrical Connection: 6ft (2m) cable pigtail
Weight: Approx. 110 grams
Mounting: Panel mounting bracket included (back connect only)
Media: Fluids and gases compatible with 304 SS (sensor housing) and 17-4 pH SS (sensor diaphragm)RTV

TO ORDER THE GC31 ULTRA-COMPACT DIGITAL PRESSURE SENSOR:

G C 3 1	7			F 4		X	
Type (GC31)	**Accuracy** **(7)** ±1.0%	**Connection** **(M02L)** ¼ NPT Male w/lower connect **(M02B)** ¼ NPT Male w/back connec	**Output Signal** **(1N)** 1-5Vdc: Analog w/2X NPN Type switches **(1P)** 1-5Vdc: Analog w/2X PNP Type switches	**Electrical Connection** **(F4)** 6´ (2m) cable	**Pressure Ranges** **Gauge:** (50#G) 0/50 psig (100#G) 0/100 psig (150#G) 0/150 psig (300#G) 0/300 psig (500#G) 0/500 psig (1000#G) 0/1000 psig (1500#G) 0/1500 psig. **Compound:** (75#&V) –15 to 75 psig (150#&V) –15 to 150 psig (300#&V) –15 to 300 psig	**Options** **XRH** 9 pt. NIST traceable calibration certificate

Consult factory for guidance in product selection
Phone (203) 378-8281 or visit our
web site at www.ashcroft.com

ASHCROFT®

Model GC35 Ultra-Compact Digital Pressure Sensor

APPLICATIONS

The GC35 utilizes Ashcroft's field proven thin film sensing technology in a design to provide exceptional overpressure and cycle life, typically required in:

- ***Hydraulic presses, stamping equipment, lifts***
- ***Water/wastewater pressure control***
- ***Water, refrigerant or ammonia based cooling systems***
- ***Pressure monitoring on lubrication systems***

FEATURES

- ***Combined 3-in-1 digital pressure gauge, switch and transducer***
- ***High overpressure capability***
- ***All stainless steel wetted materials***
- ***Simple "Push-Button" configurability allows user to adjust switch settings, analog scaling***
- ***Rugged aluminum housing***

LOOK FOR THIS MARK ON OUR PRODUCTS

GloBand Display
Full 360° Visability

User configurable LED light ring changes color with switch setpoints

PERFORMANCE SPECIFICATIONS

Analog Output (4-20mA):

Accuracy: ± 1.0% Span (Accuracy includes the effects of linearity, hysteresis, repeatability, zero offset and span setting errors)

Response Time: 30msec–10sec (by user)

Output Resolution: ±0.05% Span

Analog Scaling: User may configure analog output scaling to any range within –100 to +150% Full Scale of the sensor range

Pressure Switch Output:

Type: NPN or PNP open collector up to 80ma

Setting Accuracy: ±1.0% Span

Response Time: 5msec – 10.0 sec (by user)

Hysteresis: Variable (by user)

Switch Setting: User may adjust switch actuation and deadband to any points within Full Scale sensor range

Display:

Type: 4 digit, 8mm LED

Accuracy: ±1.0% Span (URL) + last digit

Display Update Rate: 200msec–10.0 sec (by user)

Display Setting: User may re-configure display scaling, set to capture MIN or MAX value and adjust display update rate

Standard Ranges (Gauge):
0 to 50 psig, 100 psig, 150 psig, 300 psig, 500 psig, 1000 psig, 1500 psig, 3000 psig, 5000 psig, 7500 psig

Standard Ranges (Compound):
–15 to 75 psig, –15 to 150 psig –15 to 300 psig,

ENVIRONMENTAL SPECIFICATIONS

Temperature Limits:

Storage: –20 to 70°C (–4 to 158°F)

Operating: –20 to 70°C (–4 to 158°F)

Compensated: –20 to 70°C (–4 to 158°F)

Temperature Effects:

Zero/Span: ±0.1%Span/°C (from 23°C reference temp.)

Humidity: 0-85% RH (Ranges 150 psi & below)
0-100% RH (Ranges 300 psi & above)

FUNCTIONAL SPECIFICATIONS

Proof Pressure:
4X Range (ranges 1500 psi & below)
2.5X Range (ranges 3000 psi & above)

Burst Pressure:
10X Range (ranges 1500 psi & below)
5X Range (ranges 3000 psi & below)
3X Range (ranges 5000 psi & above)

Withstand Voltage: 350Vac 1 minute

Insulation Voltage: 50Vdc 100MV min

Approvals/Certifications: CE, RoHS

Stability: ±0.25% Span/year

ELECTRICAL SPECIFICATIONS

Power Supply Requirements:

Supply Voltage: 16-36Vdc (with analog output option)
11-36Vdc (switch output version only)

Current Consumption: 50mAdc max

Switch Contacts:
User selectable NPN or PNP open collector outputs
NPN Type: 30Vdc / 80mA (max)
PNP Type: Supply Voltage 80mA (max)
Voltage Drop 1Vdc (max)

MECHANICAL SPECIFICATIONS

Pressure Connection: ¼ NPT (Male)

Connection Location: Lower, back

Enclosure: Nickel plated aluminum

Environmental Rating: IP65 (ranges 150 psi and below); IP67 (ranges 300 psi and above)

Electrical Connection: M12 connector (4 pin)

Weight: Approx. 150 grams

Media: Fluids and gases compatible with 316SS pressure connection and 17-4pH SS (sensor diaphragm)

TO ORDER THE GC35 ULTRA-COMPACT DIGITAL PRESSURE SENSOR:

G C 3 5	7			E W		X
Type (GC35)	**Accuracy** **(7)** ±1.0%	**Connection** **(M02L)** ¼ NPT Male w/lower connect (MO2B) ¼ NPT Male w/back connec	**Output Signal** **(41)** 4-20mA & 1X switch **(N2)** 2X switch (no 4-20mA output)	**Electrical Connection*** **(EW)** M12 Type (4 pin)	**Pressure Ranges** **Gauge:** (50#G) 0/50 psig, (100#G) 0/100 psig, (150#G) 0/150 psig, (300#G) 0/300 psig, (500#G) 0/500 psig, (1000#G) 0/1000 psig, (1500#G) 0/1500 psig, (3000#G) 0/3000 psig, (5000#G) 0/5000 psig, (7500#G) 0/7500 psig. **Compound:** (75#&V) –15 to 75 psig, (150#&V) –15 to 150 psig, (300#&V) –15 to 300 psig	**Options** **XRH** Traceable 9 Point Calibration Report

*To obtain M12 mating connection (3 ft.) order part number 611C175-03.

Consult factory for guidance in product selection
Phone (203) 378-8281 or visit our
web site at www.ashcroft.com

ASHCROFT®

Model GC51 Rangeable Pressure Transmitter

APPLICATIONS

The GC51 utilizes Ashcroft's proven polysilicon thin film sensor which makes the design suitable for applications where high overpressure and high cycle life are necessary, typically required in:

- ***Pump Control***
- ***Hydraulic Systems***
- ***Compressor Control***
- ***Process Automation***
- ***Municipal Water Tank Level***

FEATURES

- ***Up to 8 times smaller than a conventional process transmitter***
- ***Robust NEMA 4X (IP65) aluminum die cast housing***
- ***Bright backlit 4 digit LCD display***
- ***All stainless steel wetted parts***
- ***2 wire 4-20mA***
- ***Internal "Push Button" configurability allows quick range changes***
- ***Scaling function allows display to indicate arbitrary physical units***
- ***"Loop Check" function allows unit to output 4-20mA without applying pressure***
- ***"Min / Max Hold" function allows display to capture pressure events***
- ***Easily rotatable display, 90° increments***
- ***Key lock***

PERFORMANCE SPECIFICATIONS

Reference Condition: 23°C ±2° (73°F)

Accuracy: ±0.25% Span (URL)
(Accuracy includes the effects of linearity, hysteresis, and repeatability)

Stability: ±0.25% Span/year

Response Time: 30msec (user adjustable)

Output Resolution: 0.1% Span (URL)

Standard Ranges (Compound):
–15 to 15psi, –15 to 30psi, –15 to 50psi

Standard Ranges (Gauge):
0-50psi, 100psi, 150psi, 300psi, 500psi, 1000psi, 1500psi, 3000psi, 5000psi, 7500psi

ENVIRONMENTAL SPECIFICATIONS

Temperature Limits:

Storage: –20 to 70°C (–4 to 158°F)

Operating: –10 to 60°C (14 to 140°F)

Compensated: –10 to 60°C (14 to 140°F)

Temperature Effects: –10 to 60°C (14 to 140°F)
±0.02% FS (URL)/°C from 23°C reference

FUNCTIONAL SPECIFICATIONS

Overpressure (F.S.):	**Proof**	**Burst**
1500psi and below	200%	500%
3000, 5000psi	150%	300%
7500psi	120%	150%

Vibration: 5g's 150Hz

Shock: 10g's 16ms

ELECTRICAL SPECIFICATIONS

Output Signal: 4-20mA (2 Wire)

Supply Voltage: 12-32Vdc

Rangeablility / Adjustment*:
Zero –10% to +110% Span
Span –10% to +110% Span

***Note:** Accuracy and output resolution based upon full scale (URL) value

Insulation Resistance: 50Vdc (>100Mohms)

Approvals/Certifications: CE

MECHANICAL SPECIFICATIONS

Pressure Connection: ¼ Female NPT

Enclosure: Aluminum

Environmental Rating: IP65 / NEMA 4X

Electrical Connection (Options):
– ½˝ Female NPT Conduit
– Cable Gland (Cable Diameters 0.35˝ to 0.47˝)

Weight: Approx. 1.0 lb

Mounting: Mounting Bracket included

Media: Fluids and gases compatible with 316SS and pH17-4 stainless steel

TO ORDER THE GC51 PRESSURE TRANSMITTER:

G C 5 1	7	□□□	□□	□□	□□□□	X□□
Type Configuration (GC51)	**Accuracy** **(7)** ±0.25% FS	**Pressure Fitting** **(F02)** ¼˝ FNPT	**Output Signal** **(42)** 4-20mA	**Electrical Connection** **(CG)** = Cable Guard **(CD)** = ½˝ FNPT Conduit	**Pressure Ranges (Compound)** **15#&VACG** = Vac-15psi **30#&VACG** = Vac-30psi **50#&VACG** = Vac-50psi **Pressure Ranges (Gauge)** **50#** = 50 psi **100#** = 100 psi **150#** = 150 psi **300#** = 300 psi **500#** = 500 psi **1000#** = 1000 psi **1500#** = 1500 psi **3000#** = 3000 psi **5000#** = 5000 psi **7500#** = 7500 psi	**Optional X-Variations** **XRH** 9 pt. NIST traceable calibration certificate **X6B** Oxygen cleaned

Consult factory for guidance in product selection
Phone (203) 378-8281 or visit our
web site at www.ashcroft.com

ASHCROFT®

Model GC55 Wet/Wet Differential Pressure Transducer

APPLICATIONS

The GC55 utilizes two polysilicon thin film sensors to achieve a wet-wet, high differential, pressure measurement. Fully welded assembly of all stainless steel with high overpressure capability makes the GC55 ideal for pump systems in applications such as:

- ***Level measurement in large size and/ or pressurized tanks***
- ***Pump monitoring of building hydronic heating and cooling systems***
- ***Filter monitoring in water purification or hydraulic systems***

FEATURES

- ***Robust aluminum die cast housing***
- ***Bright LED display of pressure and switch status***
- ***All stainless steel wetted parts***
- ***4-20mA or 1-5Vdc outputs***
- ***Internal "Push-Button" configurability allows quick user pressure range changes or relay adjustments***
- ***External "Push-Button" allows user to display P1, P2 or DP without opening cover***
- ***Two sensor design well suited for high DP ranges***

PERFORMANCE SPECIFICATIONS

Analog Output (4-20mA or 1-5Vdc):
Accuracy: ± 0.5% Span (Accuracy includes the effects of Linearity, Hysteresis and Repeatability)
Response Time: 20msec
Output Resolution: 0.2% Span
Stability: ±0.5%/yr

Pressure Switch Output:
Type: TTL/CMOS up to 40Vdc/200mA
Setting Accuacy: ± 1.0% Span
Number of Contacts: 2
Response Time: 20msec – 2.0 sec (by user)
Hysteresis: Variable (by user)

Display:
Type: 3½ digits
Accuracy: ± 1.0% Span

Standard Ranges (Differential):

75psi	
100psi	250psi
150psi	300psi

ENVIRONMENTAL SPECIFICATIONS

Temperature Limits:
Storage: –20 to 60°C (–4 to 140°F)
Operating: –10 to 50°C (14 to 122°F)
Compensated: –10 to 50°C (14 to 122°F)
Temperature Effects:
Zero/Span:
±0.05%Span/°C (from 23°C reference temperature)

FUNCTIONAL SPECIFICATIONS

Static (Line) Pressure:

Pressure Range	Proof	Burst
All	2X F.S. (URL)	10X F.S. (URL)

Static (Line) Pressure Effects: None

Single Side (Differential Limits):

Pressure Range	Proof	Burst
All	2X F.S. (URL)	10X F.S. (URL)

ELECTRICAL SPECIFICATIONS

Transducer Output Signal	Supply Voltage	Supply Current
4-20mA (3 wire)	15-27 Vdc	80mA
1-5Vdc (3 wire)	11-27 Vdc	60mA

Switch Contacts: (2) Photo MOS relay outputs; Load 200mA (max), 40Vdc; Hysteresis (variable)

Rangeablility / Adjustment*:
Zero –105% to +105% Span
Span –105% to +105% Span

***Note:** Accuracy based upon full scale (URL) value

MECHANICAL SPECIFICATIONS

Pressure Connection: ⅛˝ Female NPT (2)

Enclosure: Aluminum

Environmental Rating: IP66

Electrical Connection:
External Options:
– ½˝ Female NPT Conduit
– Cable Gland (Cable Diameters 0.16˝ to 0.31˝)

Weight: Approx. 1.0 lb

Mounting: (2) 5.2mm mounting holes (see installation drawings)

Media: Fluids and gases compatible with 304SS (sensor housing) and 17-4 pH SS (sensor diaphragm)

TO ORDER THE GC55 PRESSURE TRANSDUCER:

G C 5 5	7	[ ][ ][ ]	[ ][ ]	[ ][ ]	[ ][ ][ ][ ][ ][ ]	X [ ][ ]
Type Configuration (GC55)	**Accuracy (7)** ±0.50%	**Pressure Fitting (F01)** ⅛˝ FNPT	**Output Signal (15)** 1-5Vdc **(42)** 4-20mA	**Electrical Connection (CG)** = Cable Guard **(CD)** = ½˝ FNPT Conduit	**Pressure Range Differential*** **75#** = 75 psi **100#** = 100 psi **150#** = 150 psi **250#** = 250 psi **300#** = 300 psi	**Optional X-Variations** **XRH** 9 pt. NIST traceable calibration certificate

*Note: Maximum operating static (line) pressure is equal to the pressure range (URL) of the unit ordered.

Consult factory for guidance in product selection
Phone (203) 378-8281 or visit our
web site at www.ashcroft.com

ASHCROFT®

Type T2 – High Performance Pressure Transducer for General Industrial Applications

APPLICATIONS:
An Ashcroft pressure transducer to meet demanding requirements in general industrial applications:

- *Process automation*
- *Compressor control*
- *Hydraulic systems*
- *Engine monitoring*
- *Pump control*
- *Pneumatics*
- *Refrigeration equipment*
- *Presses*
- *Machine Tools*
- *Other general industrial applications*

Important features include:

- *0.25% accuracy class*
- *Ranges 30 psi through 20,000 psi*
- *Broad temperature capability*
- *All-welded pressure construction*
- *Proven polysilicon thin film sensor*
- *Precision ASIC based electronics*
- *High EMI/RFI immunity rating*
- *Highly configurable*
- *Voltage and current outputs*
- *Choice of electrical connections*
- *Optional Panel Meter, see Ashcroft model DM61*

PERFORMANCE SPECIFICATIONS

Ref. Temperature, 21°C ±1°C (70°F, ±2°F)
Accuracy:
Static Accuracy Class: ±0.25% of span (BFSL Method) including non-linearity, hysteresis, non-repeatability at reference temperature
Temperature Effect:
–20°C to 85°C <±1% of Span – Total Error Band
–40°C to –20°C <±1.5% of Span – Total Error Band
85°C to 125°C <±1.5% of Span – Total Error Band
Total Error Band includes the combined effects of non-linearity (Terminal Point Method), hysteresis, non-repeatability, temperature and zero offset and span setting errors. For higher performance availability consult factory
Stability: Less than ±0.25% span/year
Durability: Tested to 50 million cycles

ENVIRONMENTAL SPECIFICATIONS

Temperature:

Compensated	–40 to 125°C	(–40 to 257°F)
Operating	–40 to 125°C	(–40 to 257°F)
Storage	–40 to 125°C	(–40 to 257°F)

Humidity: 0 to 100% R.H., no effect

FUNCTIONAL SPECIFICATIONS

Select from over 25 pressure ranges starting at 30 psi and running through 20,000 psi. Compound (vacuum & pressure) ranges are also available, see below.

Overpressure (F.S.):	Proof	Burst
750 psi & below	200% F.S.	1000% F.S.
1500-3000 psi	200% F.S.	500% F.S.
4000-6000 psi	150% F.S.	500% F.S.
7500 psi	120% F.S.	500% F.S.
10,000-20,000 psi	120% F.S.	240% F.S.

Vibration: Random vibration (20 g) over temperature range (–40° to 125°C). Exceeds typical MIL. STD. requirements
Shock: 100gs, 6 ms
Drop Test: Withstands 1 meter on concrete 3 axis
Response Time: Less than 1 msec
Warm-up Time: Less than 500 msec typical
Position Effect: Less than ±0.01% span, typical

ELECTRICAL SPECIFICATIONS

Output Signals Available:

Voltage Output	**Excitation**	**Supply Current**
0-5 Vdc, 3 wire	9-36 Vdc	5mA
0-10 Vdc, 3 wire	14-36 Vdc	5mA
1-5 Vdc, 3 wire	9-36 Vdc	4mA
1-6 Vdc, 3 wire	9-36 Vdc	4mA
Ratiometric Output		
0.5-4.5 Vdc, 3 wire	5 Vdc ±0.5 Vdc	3.5mA
Current Output		
4-20mA, 2 wire	9-36 Vdc	

Reverse Polarity & Miswired Protected: Yes
Insulation Breakdown Voltage: 100 Vac
Insulation Resistance: Greater than 100 megohms at 100 Vdc
Approvals/Certifications: CE

PHYSICAL SPECIFICATIONS

Pressure Connection: 304 stainless steel
Sensor Material: 17-4PH SS
Housing: 20% Glass Reinforced Nylon, Fire retardant to UL94 V1
Available Process Connections (Male):
$^1/_8$ NPT, $^1/_4$ BSP, $^1/_4$ NPT, G$^1/_4$ B, $^7/_{16}$-20 UNF-2A
For other connections consult factory
Environmental Rating: Enclosure meets NEMA 4X, IP65

ELECTRICAL TERMINATION

- Pigtail: 3 feet of shielded cable, PVC jacket, 24 AWG, leads
- DIN 43 650-A
- Bendix style 4 pin, PTO 2A-8-4P or similar
- M12 x 1, 4 pin, circular style

DIMENSION DRAWINGS

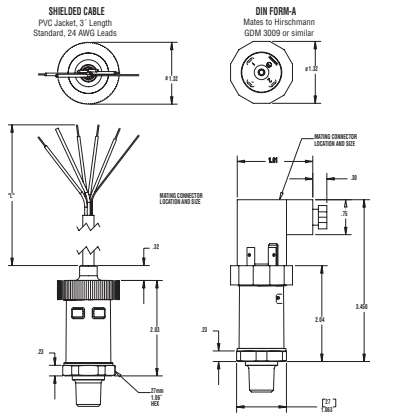

M12 and Bendix style termination designs share similar dimensions to those shown above.

TO ORDER THE T2 PRESSURE TRANSDUCER:

T 2 — **Type Configuration** (T2)

7 — **Accuracy ±0.25% Static Accuracy Class (BFSL)**
±1.00% Total Error Band –20°C to +85°C
±1.50% Total Error Band –40°C to –20°C, 85°C to 125°C

[ ][ ][ ] Pressure Connection
M01 ⅛ NPT-male
M02 ¼ NPT-male
MEK $^7/_{16}$-20 SAE-male
MS2 ¼-19 BSP male
MG2 G ¼ B male
M76 $^7/_{16}$-20 SAE UNJF-3A w/37°Cone (–4AN)
Consult Factory Other Connections

[ ] Output Signal
05= 0-5 Vdc
10 = 0-10 Vdc
15 = 1-5 Vdc
16 = 1-6 Vdc
42 = 4-20mA
RM = 0.5-4.5 Vdc Ratio Metric to 5Vdc supply

[ ] Electrical Connection
DIN 43 650-A – Mates to Hirschmann GDM 3009 or similar
DN = no mating conn.
D0 = w/mating conn., no cable
D2 = w/mating conn. 3´ shielded cable
M12 – Mates to Hirschmann 933 172-100 or similar
EW = no mating conn.
E0 = w/mating conn. no cable
E2 = w/mating conn. & 3´ shielded cable
Circular 4 Pin – Mates to Amphenol Bendix PTO6A-8-4S-SR or similar
B4 = no mating conn.
H1 = w/mating conn., no cable
L1 = w/mating conn. 3´ shielded cable
Pigtail – Shielded cable with PVC Jacket and 24 AWG leads
F2 = w/3´ cable length
P1 = w/3´ cable length
F3 = w/6´ cable length
Consult factory for additional cable lengths

[ ][ ][ ][ ][ ][ ] Pressure Ranges

psi Ranges		
30#	=	30 psi
50#	=	50 psi
60#	=	60 psi
100#	=	100 psi
150#	=	150 psi
200#	=	200 psi
300#	=	300 psi
400#	=	400 psi
500#	=	500 psi
750#	=	750 psi
1000#	=	1000 psi
1500#	=	1500 psi
2000#	=	2000 psi
3000#	=	3000 psi
4000#	=	4000 psi
5000#	=	5000 psi
6000#	=	6000 psi
7500#	=	7500 psi
10000#	=	10000 psi
15000#	=	15000 psi
20000#	=	20000 psi

G — **Measurement Type**
G = Gauge pressure, vented housing
For sealed housing (PSIS) consult factory

Compound Ranges

30# & vac	=	30 psi/-14.7 psi
45# & vac	=	45 psi/-14.7 psi
60# & vac	=	60 psi/-14.7psi
85# & vac	=	85 psi/-14.7 psi
100# & vac	=	100 psi/-14.7 psi
150# & vac	=	150 psi/-14.7 psi
200# & vac	=	200 psi/-14.7 psi
300# & vac	=	300 psi/-14.7 psi

Ranges in bar, kPa and mPa are also available

X[ ][ ] — **Optional X-Variations**
Consult factory for available options

Consult factory for guidance in product selection
Phone (203) 378-8281 or visit our web site at www.ashcroft.com

ASHCROFT®

Type G2 – Patented High Performance Pressure Transducer for Tough OEM Applications

APPLICATIONS:

A new Ashcroft pressure transducer to meet demanding requirements in applications involving:

- *Off-road vehicles*
- *Construction machinery*
- *Compressor control*
- *HVAC and refrigeration*
- *Agricultural implements*
- *Process automation and control*
- *Hydraulic and pneumatic sensing*
- *Pump monitoring*

Important features include:

- *1% total error band accuracy†*
- *Broad temperature capability*
- *All-welded pressure construction*
- *High EMI/RFI rating*
- *Ranges 30 psi through 20,000 psi*
- *Housing IP67 rating*
- *Diagnostic rails*
- *Polysilicon thin film sensor*

†*Tighter accuracy performance available, consult factory.*

PERFORMANCE SPECIFICATIONS

Ref. Condition 21°C ±1°C (70°F ±2°F)
Accuracy:
Total Error Band includes combined effects of temperature, non-linearity (Terminal Point Method), hysteresis, non repeatabilty, zero offset and span setting errors
±1% of Span: From –20 to 85ºC (–4 to 185ºF)
±1.5% of Span: From –40 to –20ºC (–40 to –4ºF)
±1.5% of Span: From 85 to 125ºC (185 to 257ºF)
Note: Static accuracy ±0.25% of span BFSL (Best Fit Straight Line Method); includes non-linearity, hysteresis and non-repeatable effects at reference temperature 72°F (21°C)
Stability: Less than ±0.25% span/year
Durability: Tested to 50 million cycles

ENVIRONMENTAL SPECIFICATIONS

Temperature:

Compensated	–40 to 125°C	(–40 to 257°F)
Operating	–40 to 125°C	(–40 to 257°F)
Storage	–40 to 125°C	(–40 to 257°F)

Humidity: 0 to 100% R.H., no effect

FUNCTIONAL SPECIFICATIONS

Select from over 25 pressure ranges starting at 30 psi and running through 20,000 psi gauge. Compound (vacuum & pressure) ranges are also available, see "To Order" below.

Overpressure (F.S.):	**Proof**	**Burst**
750 psi & below	200% F.S.	1000% F.S.
1500-3000 psi	200% F.S.	500% F.S.
4000-6000 psi	150% F.S.	500% F.S.
7500 psi	120% F.S.	500% F.S.
10,000-20,000 psi	120% F.S.	240% F.S.

Vibration: Random vibration (20 g) over temperature range (–40° to 125°C). Exceeds typical MIL. STD. requirements

Shock: 100gs, 6 ms
Drop Test: Withstands 1 meter on concrete 3 axis
Response Time: Less than 1 msec
Warm-up Time: Less than 500 msec typical
Position Effect: Less than ±0.01% span, typical

ELECTRICAL SPECIFICATIONS

Output Signals Available:

Voltage Output	**Excitation**	**Supply Current**
0-5 Vdc, 3 wire	9-36 Vdc	5mA
0-10 Vdc, 3 wire	14-36 Vdc	5mA
1-5 Vdc, 3 wire	9-36 Vdc	4mA
1-6 Vdc, 3 wire	9-36 Vdc	4mA
0.5-4.5 Vdc, 3 wire	9-36 Vdc	4mA
Ratiometric Output		
0.5-4.5 Vdc, 3 wire	5 Vdc ±0.5 Vdc	3.5mA
Current Output		
4-20mA, 2 wire	9-36 Vdc	

Reverse Polarity & Miswired Protected: Yes
Insulation Breakdown Voltage: 100 Vac
Insulation Resistance: Greater than 100 megohms at 100 Vdc
Approvals/Certifications: CE

PHYSICAL SPECIFICATIONS

Pressure Connection: 304 stainless steel
Sensor Material: 17-4PH SS
Housing: 20% Glass Reinforced Nylon, Fire retardant to UL94 V1
Available Process Connections (Male):
See How to Order section below
For other connections consult factory
Environmental Rating: IP67

ELECTRICAL TERMINATION

- Shielded Cable: 3´ standard, 24 AWG, PVC Jacket
- Flying Lead: 3´ standard, 18 AWG
- Metri-Pack 150 series*
- Hirschmann G series**

*Metri-Pack is a trademark of Delphi Packard Electric Systems
** Trade Mark of Richard Hirschmann of America, Inc.

DIMENSION DRAWINGS

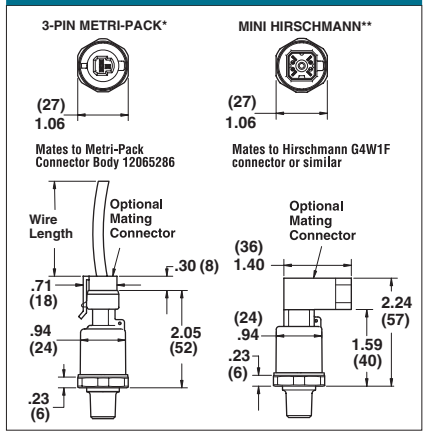

Shielded cable and flying lead designs share similar dimensions to those shown.

TO ORDER THE G2 PRESSURE TRANSDUCER:

G 2 — **Type Configuration** (G2)

7 — **Accuracy**
±1.0% Total Error Band –20°C to 85°C
±1.5% Total Error Band – 40°C to -20°C, 85 to 125°C

Pressure Connection
M01 ⅛ NPT-male
M02 ¼ NPT-male
MEK 7/16-20 SAE-male w/Buna-N O-ring
M38 ⅜-24 SAE-male w/Buna-N O-ring
MEV 9/16-18 SAE-male w/Buna-N O-ring
M33 ⅜-24 UNJF3A (w/37° cone seat)
M76 7/16-20 UNJF3A (w/37° cone seat)
MS2 ¼-19 BSP male
MG2 G ¼ B male

Output Signal
05 = 0-5 Vdc
10 = 0-10 Vdc
15 = 1-5 Vdc
16 = 1-6 Vdc
42 = 4-20mA
45 = 0.5-4.5 Vdc 9-36 Vdc supply
RM = 0.5-4.5 Vdc Ratio Metric to 5Vdc supply

Electrical Connection

Metri-Pack*
GN = no mating conn.
G2 = mating aconn. 3´ cable
G3 = mating conn. 10´ cable
G1 = mating conn. w/customer specified length

Hirschmann G Series**
HM = no mating conn.
M1 = with mating conn. no cable
M2 = mating conn. 3´ cable
P9 = mating conn. w/customer specified length

Flying Leads
W2 = 1m flying leads
W9 = customer specified length

Shielded Cable
F2 = 3´ shielded cable
F3 = 10´ shielded cable
P1 = customer specified length

M12, 4-pin
EW = w/out mating conn.
E0 = w/mating conn. No cable
E2 = w/mating conn./Cable 3 ft.
E1 = w/mating conn./Cable Customer defined length

Deutsch DT Series DT04-3P
DT = w/out mating conn.
T2 = w/1m, 3´cable
T3 = w/3m, 10´cable
T1 = w/mating conn. cable customer defined length

Deutsch DTM Series DTM04-3P
DS = w/out mating conn.
S2 = w/1m, 3´cable
S3 = w/3m, 10´cable
S1 = w/mating conn. cable customer defined length

AMP Superseal
AP = w/out mating conn.
A2 = w/1m, 3´cable
A3 = w/3m, 10´cable
A1 = w/mating conn. cable customer defined length

DIN 43650 Form C
DC = no mating conn.
N1 = with mating conn. no cable
N2 = mating conn. 3´cable
N3 = mating conn. 10´cable
N9 = mating conn. w/customer specified length

Pressure Ranges

psi Ranges	
30#	= 30 psi
50#	= 50 psi
60#	= 60 psi
100#	= 100 psi
150#	= 150 psi
200#	= 200 psi
300#	= 300 psi
400#	= 400 psi
500#	= 500 psi
750#	= 750 psi
1000#	= 1000 psi
1500#	= 1500 psi
2000#	= 2000 psi
3000#	= 3000 psi
4000#	= 4000 psi
5000#	= 5000 psi
6000#	= 6000 psi
7500#	= 7500 psi
10000#	= 10000 psi
15000#	= 15000 psi
20000#	= 20000 psi

G — **Measurement Type**
G = Gauge Pressure

X — **Optional X-Variations**
Consult Factory for Available Options

Compound Ranges

30#&vac =	30 psi/–14.7 psi
45#&vac =	45 psi/–14.7 psi
60#&vac =	60 psi/–14.7 psi
85#&vac =	85 psi/–14.7 psi
100#&vac =	100 psi/–14.7 psi
150#&vac =	150 psi/–14.7 psi
200#&vac =	200 psi/–14.7 psi
300#&vac =	300 psi/–14.7 psi

Ranges in Bar,m kPa and mPa are also available
Consult Factory for Other Connections
*Metri-Pack is a trademark of Delphi Packard Electric Systems.
**Trademark of Richard Hirschmann of America, Inc.

Consult factory for guidance in product selection
Phone (203) 378-8281 or visit our web site at www.ashcroft.com

ASHCROFT®

Type A2 Heavy Industrial Pressure Transducer

APPLICATIONS

Test stands, compressor control, hydraulic systems, process automation, pump and pneumatic systems control

BENEFITS AND FEATURES

- ***Pressure ranges from 5 psi through 10,000 psi***
- ***CE mark***
- ***316L SS wetted materials***
- ***304 SS case***
- ***Six output signals to choose from***
- ***Optional absolute pressure ranges available***
- ***Optional external zero and span potentiometers***
- ***Optional Panel Meter, see Ashcroft model DM61***

The Ashcroft® A2 pressure transmitter is ideal for a broad spectrum of pressure sensing requirements found in heavy industrial, and test and measurement applications. It offers the instrument specifier a wide choice of construction and performance variables.

The Ashcroft® A2 is designed and manufactured to provide the user with accurate, reliable, and stable output data. This is accomplished through the use of an on board microprocessor, that is programmed during a unique digital compensation process, to provide extremely linear and precise performance over the entire specified pressure and temperature range.

PERFORMANCE SPECIFICATIONS

Reference Temperature: 70°F (21°C)

Accuracy, Three Classes (% Span):

Includes non-linearity (Terminal Point Method), hysteresis, non-repeatability, zero offset and span setting errors)	±.25	±0.5	±1.0
Best Fit Straight Line* (BFSL):	±.20	±.40	±.50

*Add ±.05% for ranges above 5000 psi

Stability:
Sensor Material 316L SS or 17-4PH SS: ≤±0.25% Span/year @ reference conditions

Durability: Greater than 10 million cycles

ENVIRONMENTAL SPECIFICATIONS

Temperature Limits:

Storage:	–40 to +125°C (–40 to 257°F)
Process:	–40 to +125°C (–40 to 257°F)
Operating:	–40 to +125°C (–40 to 257°F)
Compensated*:	–20 to +85°C (–4 to 185°F)

*Consult factory for other options

Temperature Effects: –20 to +85°C (–4 to 185°F)

- 1.0% of Span for .25% Accuracy Class
- 2.0% of Span for .50% and 1.0% Accuracy Classes

Humidity Effects: No performance effects from 0 to 95% relative humidity, non-condensing, 0-100% RH with "W" enclosure.

FUNCTIONAL SPECIFICATIONS

Response Time: <2ms

Pressure Ranges: Vacuum, gauge, compound and absolute pressure from 0-5 psi through 0-10,000. Equivalent ranges in bar available. See order guide section (below.)

Vibration Effect:

Shock:	100g Peak, 11ms
Random:	10g RMS, 20-2000Hz
Sweep:	50-2000Hz, 5g peak

Position Effect: ± 0.02% Typical

Approvals/Certifications: CE

Overpressure (F.S.)*:	**Proof**	**Burst**
0#/vac. to 300 psi	1.5 x F.S.	min. 2 x F.S.
500-10,000 psi	1.2 x F.S.	1.5 x F.S.

*For higher overpressure ratings use XK8 option.

ELECTRICAL SPECIFICATIONS

Output Signal:	**Supply Voltage: (unregulated)**	**Minimum**	**Maximum**
0-5Vdc	(3 Wire)	12Vdc	36Vdc
0-10Vdc	(3 Wire)	14Vdc	36Vdc
1-5Vdc	(3 Wire)	10Vdc	36Vdc
1-6Vdc	(3 Wire)	10Vdc	36Vdc
4-20mA*	(2 Wire)	12Vdc	36Vdc

Power Requirements:
Supply Current: <5mA for voltage outputs

Electrical Terminations:
See To Order below for Options

Circuit Protection:
Reverse polarity and mis-wire proected

Insulation Resisance (Circuit to Case):
100Mohm @ 30Vdc

PHYSICAL SPECIFICATIONS

Case: Material 304SS

Wetted Materials: 316L SS diaphragm and pressure port. Optional 17-4PH SS diaphragm and 316L SS pressure port (see How to Order Section).

Environmental Rating:

Enclosure	**Code**	**Rating**
Basic	(S)	IP65, NEMA 4X
Zero/Span	(Z)	IP65, NEMA 4X
All Welded (w/Z/S)	(Y)	IP65, NEMA 4X
All Welded (w/o Z/S)	(W)	IP67, NEMA 6*

NOTE:
Refer to Ashcroft Model A2X for Explosion / Flame Proof configurations and Ashcroft Model A4 for Intrinsically Safe/ Non-Incendive applications.

*(varies with pressure range)

.

TO ORDER THE A2 PRESSURE TRANSMITTERS:

A 2 | ☐ | ☐ | ☐☐☐ | ☐☐ | ☐☐ | ☐☐☐☐☐☐ | ☐ | **X** ☐☐

Type Configuration
(A2)

Enclosure
(S) Basic
(Z) Zero & Span Access
(Y) Welded with Zero & Span Access
(W) Welded w/out Zero & Span Access

Accuracy/Temp. Effects
(A) 0.25%/≤0.5% (–20°C to +85°C)
(B) 0.50%/≤1.0% (–20°C to +85°C)
(C) 1.00%/≤1.0% (–20°C to +85°C)

Pressure Connection
(M01) ⅛ NPT-M
(M02) ¼ NPT-M
(F02) ¼ NPT-F
(MEK) 7/16-20 SAE-M (Aminco)
(F09) 9/16-18 (¼)-F
(M04) ½ NPT-M
(F04) ½ NPT-F
(MG4) G ½ M
(VM2) VCR inlet fitting ¼˝ VCR gland with 9/16-18 male nut
(VF2) VCR inlet fitting ¼˝ VCR gland with 9/16-18 female nut
(others available upon request)

Output Signal
(05) 0-5 Vdc
(10) 0-10 Vdc
(15) 1-5 Vdc
(16) 1-6 Vdc
(42) 4-20mA

Electrical Termination
Integral Cable (Pigtail)
(F2) 3´ shielded cable(1)
(P1) (specify length)(1)
Hirschmann Style Form A DIN 43650-A
(DN) w/o mating conn.(1)
(D0) with mate, no cable(1)
(D2) with mate, 3´ cable(1)
(D1) with mate, (specify length)(1)
4-Pin Bendix Style
(B4) w/o mating conn.(2)
(H1) with mate, no cable(2)
(L1) with mate, 3´ cable(2)
(P2) with mate, (specify length)(2)
½ NPT-M Conduit w/Pigtail
(C1) 3´ shielded cable(3)
(P7) (specify length)(3)
½ NPT-M Conduit
(C2) 3´ flying leads(3)
(C5) 10´ flying leads(3)
Hirschmann "E" Series M12 Threaded
(EW) w/o mating conn.(1)
(E0) with male, no cable(1)
(E2) with male, 3´ cable(1)
(E1) with male, (specify length)(1)

Pressure Range

(1.5#) 1.5 psi(5),(6)	(750#) 750 psi
(5#) 5 psi(5),(6)	(1000#) 1000 psi
(10#) 10 psi(5),(6)	(1500#) 1500 psi
(15#) 15 psi(5)	(2000#) 2000 psi
(30#) 30 psi(5)	(3000#) 3000 psi
(50#) 50 psi	(5000#) 5000 psi
(60#) 60 psi	(7500#) 7500 psi
(75#) 75 psi	(10,000#) 10,000 psi(4)
(100#) 100 psi	(0# & vac.) 0 psi/vac.(5),(6)
(150#) 150 psi	(15# & vac.) Vac./15 psi(5),(6)
(200#) 200 psi	(30# & vac.) Vac./30 psi(5),(6)
(300#) 300 psi	(45# & vac.) Vac./45 psi(6)
(500#) 500 psi	(60# & vac.) Vac./60 psi

Measurement Type
(G) Gauge Pressure Sensor
(A) Absolute Pressure Sensor

Optional X-Variations
(XCL) Non-standard** calibration
(XK8) 17-4pH SS Sensor Material
(X6B) Cleaned For Oxygen Service

(1) Available with enclosure code (S, Z)
(2) Available with enclosure code (S, Z, W)
(3) Available with enclosure code (W, Y)
(4) 17-4PH SS Sensor Required
(5) 17-4PH SS Sensor Not Available
(6) Gauge pressure only

**Minimum 10 pieces for non-standard pressure ranges

Note: All A2 units include a 9 point NIST traceable calibration report.

Consult factory for guidance in product selection
Phone (203) 378-8281 or visit our web site at www.ashcroft.com

ASHCROFT®

Type A2X Explosion/Flame Proof Pressure Transmitter

APPLICATIONS

Oil field equipment, upstream oil and gas production, natural gas compression and transfer control, alternative energy projects

BENEFITS AND FEATURES

- ***cUL and ATEX listed***
- ***FM intrinsically safe approvals (see note under Optional Hazardous Area Classifications below)***
- ***CSA intrinsically safe approvals (see note under Optional Hazardous Area Classifications below)***
- ***Choice of 0.25, 0.50 or 1.0% accuracy***
- ***Pressure ranges from 5 psi through 10,000 psi***
- ***CE mark***
- ***316L SS wetted materials, 17-4 PH optional***
- ***304 SS case***
- ***Six output signals to choose from***
- ***Optional absolute pressure ranges available***

The Ashcroft® AX2 pressure transmitter is ideal for a broad spectrum of pressure sensing requirements requiring approvals for explosion/flame proof.

The Ashcroft® A2X is designed and manufactured to provide the user with accurate, reliable, and stable output data. This is accomplished through the use of an on board microprocessor, that is programmed during a unique digital compensation process, to provide extremely linear and precise performance over the entire specified pressure and temperature range.

PERFORMANCE SPECIFICATIONS

Reference Temperature: 70°F (21°C)

Accuracy, Three Classes (% Span):

Includes non-linearity (Terminal Point Method), hysteresis, non-repeatability, zero offset and span setting errors)	±.25	±0.5	±1.0
Best Fit Straight Line* (BFSL):	±.20	±.40	±.50

*Add ±.05% for ranges above 5000 psi

Stability:
Sensor Material 316L SS or 17-4PH SS: ≤±0.25% Span/year @ reference conditions

Durability: Greater than 10 million cycles

ENVIRONMENTAL SPECIFICATIONS

Temperature Limits:

Storage:	–40 to +125°C (–40 to 257°F)
Process:	–40 to +125°C (–40 to 257°F)
Operating:	–40 to +125°C (–40 to 257°F)
Compensated*:	–20 to +85°C (–4 to 185°F)

*Consult factory for other options

Temperature Effects: –20 to +85°C (–4 to 185°F)
- 1.0% of Span for .25% Accuracy Class
- 2.0% of Span for .50% and 1.0% Accuracy Classes

Humidity Effects: No performance effects from 0 to 95% relative humidity, non-condensing, 0-100% RH with "W" enclosure.

FUNCTIONAL SPECIFICATIONS

Response Time: <2ms

Pressure Ranges: Vacuum, gauge, compound and absolute pressure from 0-5 psi through 0-10,000. Equivalent ranges in bar available. See order guide section (below.)

Vibration Effect:

Shock:	100g Peak, 11ms
Random:	10g RMS, 20-2000Hz
Sweep:	50-2000Hz, 5g peak

Position Effect: ±0.02% Typical

Approvals/Certifications: CE, Hazardous Area Certifications - see following section for details

Overpressure (F.S.)*:	**Proof**	**Burst**
0#/vac. to 300 psi	1.5 x F.S.	min. 2 x F.S.
500-10,000 psi	1.2 x F.S.	1.5 x F.S.

*For higher overpressure ratings use XK8 option. See below for additional option.

ELECTRICAL SPECIFICATIONS

Output Signal:		**Supply Voltage: (unregulated)** Minimum	Maximum
0-5Vdc	(3 Wire)	12Vdc	30Vdc
0-10Vdc	(3 Wire)	14Vdc	30Vdc
1-5Vdc	(3 Wire)	10Vdc	30Vdc
1-6Vdc	(3 Wire)	10Vdc	30Vdc
4-20mA	(2 Wire)	12Vdc	30Vdc

Power Requirements:
Supply Current: <5mA for voltage outputs

Electrical Terminations:
See To Order below for Options

Circuit Protection:
Reverse polarity and mis-wire proected

Insulation Resistance (Circuit to Case):
100Mohm @ 30Vdc

PHYSICAL SPECIFICATIONS

Case: Material 304SS

Wetted Materials: 316L SS diaphragm and pressure port. Optional 17-4PH SS diaphragm and 316L SS pressure port (see How to Order Section).

Environmental Rating: IP65; NEMA 7,9

HAZARDOUS AREA CERTIFICATIONS

Explosion Proof – cUL (USL/CNL):
Class I, Div. 1 & 2, Groups A, B, C and D
Class II, Div. 1 & 2, Groups E, F and G

Flame Proof – ATEX: Specify A2X
Ex II 2 G
Ex d IIC T4

NOTE: For 4-20mA units following approvals also apply:
Intrinsically Safe – FM/CSA:
Class I, Div. 1
Class I, Div. 2, Non-Incendive
Refer to Ashcroft drawing #825A022 for wiring and installation requirements.

NOTE: Refer to Ashcroft Model A2 for Heavy Industrial, non-Hazardous rated configurations and Ashcroft Model A4 for Intrinsically Safe/non-Incendive applications.

TO ORDER THE A2X EXPLOSION/FLAME PROOF PRESSURE TRANSMITTERS:

Type Configuration (A2X)

Accuracy/Temp. Effects
(A) 0.25%/≤0.5% (–20°C to +85°C)
(B) 0.50%/≤1.0% (–20°C to +85°C)
(C) 1.00%/≤1.0% (–20°C to +85°C)

Pressure Connection

(M01)	⅛ NPT-M	(MG4)	G ½ M
(M02)	¼ NPT-M	(VM2)	VCR inlet fitting ¼˝ VCR gland with 9/16-18 male nut
(F02)	¼ NPT-F		
(MEK)	7/16-20 SAE-M		
(F09)	9/16-18 (¼)-F (Aminco)	(VF2)	VCR inlet fitting ¼˝ VCR gland with 9/16-18 female nut
(M04)	½ NPT-M		
(F04)	½ NPT-F		

Output Signal
(05) 0-5 Vdc
(10) 0-10 Vdc
(15) 1-5 Vdc
(16) 1-6 Vdc
(42) 4-20mA

Electrical Termination
½ NPT-M Conduit

Flying Leads
(C2) with 3´leads
(C5) with 10´leads

Shielded Cable
(C1) with 3´cable
(C6) with 15´cable
(C7) with 30´cable
(P7) with customer defined length

Pressure Range

(1.5#) 1.5 psi[5],[6]	(750#) 750 psi
(5#) 5 psi[5],[6]	(1000#) 1000 psi
(10#) 10 psi[5],[6]	(1500#) 1500 psi
(15#) 15 psi[5]	(2000#) 2000 psi
(30#) 30 psi[5]	(3000#) 3000 psi
(50#) 50 psi	(5000#) 5000 psi
(60#) 60 psi	(7500#) 7500 psi
(75#) 75 psi	(10,000#) 10,000 psi[4]
(100#) 100 psi	(0# & vac.) 0 psi/vac.[5],[6]
(150#) 150 psi	(15# & vac.) Vac./15 psi[5],[6]
(200#) 200 psi	(30# & vac.) Vac./30 psi[5],[6]
(300#) 300 psi	(45# & vac.) Vac./45 psi[6]
(500#) 500 psi	(60# & vac.) Vac./60 psi

(4) 17-4PH SS Sensor Required
(5) 17-4PH SS Sensor Not Available
(6) Gauge pressure only

Measurement Type
(G) Gauge Pressure Sensor
(A) Absolute Pressure Sensor

Optional X-Variations
(XCL) Non-standard** calibration
(XK8) 17-4pH SS Sensor Material
(X6B) Cleaned For Oxygen Service

**Minimum 10 pieces for non-standard pressure ranges.

Note: All A2X pressure transmitters include a 9 pt. NIST traceable calibration report

Consult factory for guidance in product selection
Phone (203) 378-8281 or visit our
web site at www.ashcroft.com

ASHCROFT®

Type A4 Intrinsically Safe and Non-Incendive Pressure Transmitter

APPLICATIONS

Oil field equipment, upstream oil and gas production, natural gas compression and transfer control, alternative energy projects

BENEFITS AND FEATURES

- ***FM and CSA listings***
- ***Choice of 0.25, 0.50 or 1.0% accuracy***
- ***Pressure ranges from 5 psi through 10,000 psi***
- ***CE mark***
- ***316L SS wetted materials, 17-4 PH optional***
- ***304 SS case in standard, welded or explosion proof construction***
- ***Optional absolute pressure ranges available***
- ***Zero and span access (Basic Enclosure)***

The Ashcroft® A4 pressure transmitter is ideal for a broad spectrum of pressure sensing requirements where Intrinsically Safe or Non-Incendive hazardous location ratings are required.

The Ashcroft® A4 is designed and manufactured to provide the user with accurate, reliable, and stable output data. This is accomplished through the use of an on board microprocessor, that is programmed during a unique digital compensation process, to provide extremely linear and precise performance over the entire specified pressure and temperature range.

PERFORMANCE SPECIFICATIONS

Reference Temperature: 70°F (21°C)

Accuracy, Three Classes (% Span):

Includes non-linearity (Terminal Point Method), hysteresis, non-repeatability, zero offset and span setting errors)	±.25	±0.5	±1.0
Best Fit Straight Line* (BFSL):	±.20	±.40	±.50

*Add ±.05% for ranges above 5000 psi

Stability:
Sensor Material 316L SS or 17-4PH SS: ≤±0.25% Span/year @ reference conditions

Durability: Greater than 10 million cycles

ENVIRONMENTAL SPECIFICATIONS

Temperature Limits:

Storage:	–40 to +125°C (–40 to 257°F)
Process:	–40 to +125°C (–40 to 257°F)
Operating:	–40 to +125°C (–40 to 257°F)
Compensated*:	–20 to +85°C (–4 to 185°F)

*Consult factory for other options

Temperature Effects: –20 to +85°C (–4 to 185°F)

- 1.0% of Span for .25% Accuracy Class
- 2.0% of Span for .50% and 1.0% Accuracy Classes

Humidity Effects: No performance effects from 0 to 95% relative humidity, non-condensing, 0-100% RH with "W" enclosure.

FUNCTIONAL SPECIFICATIONS

Response Time: <2ms

Pressure Ranges: Vacuum, gauge, compound and absolute pressure from 0-5 psi through 0-10,000. Equivalent ranges in bar available. See order guide section (below.)

Vibration Effect:

Shock:	100g Peak, 11ms
Random:	10g RMS, 20-2000Hz
Sweep:	50-2000Hz, 5g peak

Position Effect: ±0.02% Typical

Approvals/Certifications: CE, Hazardous Area Certifications - see following section for details

Overpressure (F.S.)*:	**Proof**	**Burst**
0#/vac. to 300 psi	1.5 x F.S.	min. 2 x F.S.
500-10,000 psi	1.2 x F.S.	1.5 x F.S.

*For higher overpressure ratings use XK8 option. See below for additional option.

ELECTRICAL SPECIFICATIONS

Output Signal:	**Supply Voltage: (unregulated)**	
	Minimum	**Maximum**
4-20mA* (2 Wire) Ratiometric	12Vdc	30Vdc*

Power Requirements & Entity Parameters:
See I&M manual

Electrical Terminations:
See To Order below for Options

Circuit Protection:
Reverse polarity and mis-wire protected

Insulation Resistance (Circuit to Case):
100Mohm @ 30Vdc

PHYSICAL SPECIFICATIONS

Case: Material 304SS

Wetted Materials: 316L SS diaphragm and pressure port. Optional 17-4PH SS diaphragm and 316L SS pressure port (see How to Order Section).

Environmental Rating:

Enclosure	**Code**	**Rating**
Basic	(S)	IP65, NEMA 4X
All Welded (w/o Z/S)	(W)	IP67, NEMA 6*

HAZARDOUS AREA CERTIFICATIONS

Intrinsically Safe – FM/CSA:
Intrinsic Safety: Class I, II and III Div.1 and 2, Groups A, B, C, D, F and G per entity requirements see Ashcroft drawing # 825A022

Non-Incendive: Class I, II and III Div. 2, Groups A, B, C, D, F and G, no barriers needed

NOTE:
Refer to Ashcroft Model A2 for Heavy Industrial, non-hazardous rated configurations and Ashcroft Model A2X for Explosion/Flame Proof applications.

*(varies with pressure range)

TO ORDER THE A4 INTRINSICALLY SAFE & NON-INCENDIVE PRESSURE TRANSMITTER

A 4 — **Type Configuration** (A4)

Enclosure
(S) Basic
(W) Welded w/out Zero & Span Access

Accuracy/Temp. Effects
(A) 0.25%/≤0.5% (–20°C to +85°C)
(B) 0.50%/≤1.0% (–20°C to +85°C)
(C) 1.00%/≤1.0% (–20°C to +85°C)

Pressure Connection

(M01) ⅛ NPT-M	(MG4) G ½ M
(M02) ¼ NPT-M	(VM2) VCR inlet fitting ¼˝ VCR gland with 9/16-18 male nut
(F02) ¼ NPT-F	
(MEK) 7/16-20 SAE-M	
(F09) 9/16-18 (¼)-F (Aminco)	(VF2) VCR inlet fitting ¼˝ VCR gland with 9/16-18 female nut
(M04) ½ NPT-M	
(F04) ½ NPT-F	

Others available upon request

Output Signal
(42) 4-20mA

Electrical Termination

Integral Cable (Pigtail)
(F2) 3´ shielded cable[1]
(P1) (specify length)[1]

Hirschmann Style Form A DIN 43650-A
(DN) w/o mating conn.[1]
(D0) with mate, no cable[1]
(D2) with mate, 3´ cable[1]
(D1) with mate, (specify length)[1]

4-Pin Bendix Style
(B4) w/o mating conn.[2]
(H1) with mate, no cable[2]
(L1) with mate, 3´ cable[2]
(P2) with mate, (specify length)[2]

½ NPT-M Conduit w/Pigtail
(C1) 3´ shielded cable[3]
(P7) (specify length)[3]

½ NPT-M Conduit
(C2) 3´ flying leads[3]
(C5) 10´ flying leads[3]

Hirschmann "E" Series M12 Threaded
(EW) w/o mating conn.[1]
(E0) with male, no cable[1]
(E2) with male, 3´ cable[1]
(E1) with male, (specify length)[1]

Pressure Range**

(1.5#) 1.5 psi[5],[6]	(750#) 750 psi
(5#) 5 psi[5],[6]	(1000#) 1000 psi
(10#) 10 psi[5],[6]	(1500#) 1500 psi
(15#) 15 psi[5]	(2000#) 2000 psi
(30#) 30 psi[5]	(3000#) 3000 psi
(50#) 50 psi	(5000#) 5000 psi
(60#) 60 psi	(7500#) 7500 psi
(75#) 75 psi	(10,000#) 10,000 psi[4]
(100#) 100 psi	(0# & vac.) 0 psi/vac.[5],[6]
(150#) 150 psi	(15# & vac.) Vac./15 psi[5],[6]
(200#) 200 psi	(30# & vac.) Vac./30 psi[5],[6]
(300#) 300 psi	(45# & vac.) Vac./45 psi[6]
(500#) 500 psi	(60# & vac.) Vac./60 psi

Measurement Type
(G) Gauge Pressure Sensor
(A) Absolute Pressure Sensor

X — **Optional X-Variations**
(XCL) Non-standard** calibration
(XK8) 17-4pH SS Sensor Material
(X6B) Cleaned For Oxygen Service

Note: All A4 units include a 9 point NIST traceable calibration report

(1) Available with enclosure code (S)
(2) Available with enclosure code (S, W)
(3) Available with enclosure code (W)
(4) 17-4PH SS Sensor Required
(5) 17-4PH SS Sensor Not Available
(6) Gauge pressure only

**Minimum 10 pieces for non-standard pressure ranges.

Consult factory for guidance in product selection
Phone (203) 378-8281 or visit our web site at www.ashcroft.com

ASHCROFT®

Type H2 Precision Pressure Transducer

APPLICATIONS

Engine / Turbine Test Stands, Remote Monitoring Systems, On-Vehicle Test Installations.

FEATURES

- ***Compact Design***
- ***Choice of 0.15% or 0.20% Accuracy***
- ***All Stainless Steel Wetted Materials***
- ***Standard Nine-Point NIST Traceable Calibration Report***

The Ashcroft® H2 precision pressure transducer is ideal for measuring and controlling challenging hydraulic and pneumatic applications. This is accomplished through the use of a unique digital compensation process. The high-accuracy and performance combined with its rugged construction provides the user with a highly reliable and safe sensor platform.

PERFORMANCE SPECIFICATIONS

Analog Output (4-20mA / 0-5Vdc / 0-10Vdc):
Accuracy: ±0.20% Span or ±0.15% Span (includes zero/span offsets, non-linearity, hysteresis and repeatability)
Temperature Effects:
Zero / Span: ±0.01% Span /°C – from 23°C (73.4°F) reference temperature
Stability: < ±0.25% span/year
Durability: Tested to 10 million cycles
Vibration: 20g (IEC 68-2-6 and IEC 68-2-36)
Shock: 1000g (IEC 68-2-32)
Response Time: 4msec (10-90%)
Position Effect: None
Output Resolution: ±0.02% Span

ENVIRONMENTAL SPECIFICATIONS

Temperature Limits:

Storage:	–40 to +105°C (–40 to 221°F)
Operating:	–20 to +85°C (–4 to 185°F)
Compensated*:	–10 to +80°C (–14 to 176°F)

*Consult factory for other options
Humidity Effects: 0 to 95% relative humidity, non-condensing

FUNCTIONAL SPECIFICATIONS

Proof Pressure: 2X Range (2000 psi & below)
1.5X Range (3000 to 5000 psi
1.2X Range (7500 psi & above)
Burst Pressure: 8X Range (2000 psi & below)
3X Range (3000 psi to 5000 psi)
1.5X Range (7500 psi & above)
Insulation Voltage: 50Vdc 100MΩ min
Approvals/Certifications: CE, RoHS

ELECTRICAL SPECIFICATIONS

Output Signal: 4-20mA / 0-5Vdc / 0-10Vdc
Supply Voltage: 9-32Vdc (4-20mA Version); 2 wires
12-32Vdc (Voltage Versions); 3 wires
Circuit Protection: Overvoltage and reverse polarity protection 36V
Insulation Resistance: <100MΩ @ 30V

PHYSICAL SPECIFICATIONS

Enclosure: 304SS
Ingress Rating: IP65 (Ranges 300 psi & below)
IP67 (Ranges above 300 psi)
Electrical Termination: Refer to "How to Order" section
Pressure Connection: Refer to "How to Order" section
Weight: Approx. 120 grams (3.86 ounces)
Media: Fluids and gases compatible with 304SS (pressure connection) and 17-4 pH SS (sensor diaphragm)

TO ORDER THE H2 PRECISION PRESSURE TRANSDUCER:

H2 — Type Configuration (H2)

☐ — Accuracy
(2) ±0.15%
(3) ±0.2%

☐☐☐ — Pressure Connection
(M02) ¼ NPT-male
(M76)* 7/16-20 UNJF-3A 37° Cone
(MEK) 7/16-20 UNF-2A (SAE #4)
(MGA) ¼ A (DIN3852-E)

☐☐ — Output Signal
(42) 4-20mA
(05) 0-5 Vdc
(10) 0-10 Vdc

☐☐ — Electrical Connection
(B6) 6 Pin Bendix (MIL-C-26482)
(EW) M12 Type 4 pin)
(F2) 3´ Shielded Cable
(DN) Hirschmann 43650-A

☐☐☐☐☐☐ — Pressure Ranges

Gauge
15#G = 0/15 psig
30#G = 0/30 psig
50#G = 0/50 psig
100#G = 0/100 psig
150#G = 0/150 psig
300#G = 0/300 psig
500#G = 0/500 psig
1000#G = 0/1000 psig
1500#G = 0/1500 psig
3000#G = 0/3000 psig
5000#G = 0/5000 psig
7500#G = 0/750 psig
10,000#G = 0/10,000 psig
15,000#G = 0/15,000 psig
20,000#G = 0/20,000 psig

Compound
15#&V = 15 to 15 psig
30#&V = 15 to 30 psig
75#&V = 15 to 75 psig
150#&V = 15 to 150 psig
300#&V = 15 to 300 psig

Absolute
15#A = 0/15 psia
30#A = 0/30 psia
50#A = 0/50 psia
100#A = 0/100 psia
150#A = 0/150 psia

Note: Consult factory for special ranges or for other units (ie. bar / mPa / kPa)

X☐☐ — Optional X-Variations
(XRH) NIST Traceable 9 Point Calibration Report
(XNH) Wired Stainless Steel Tagging
(X6B) Oxygen Cleaning

Consult factory for guidance in product selection
Phone (203) 378-8281 or visit our
web site at www.ashcroft.com

ASHCROFT®

Type KM15 Rugged, Compact Transducer for the High Volume OEM

APPLICATIONS:

High Volume Pressure Sensing in: Off Road Equipment, Construction Machinery, Compressors, Pump Control

BENEFITS & FEATURES

- ***RoHS compliant***
- ***Compact size***
- ***All welded sensor***
- ***–40/120°C operating temp***
- ***Rugged SS construction***
- ***IP 67 ingress rating***
- ***Ranges through 7500 psi***

The Ashcroft® KM15 Pressure Transducer is the ideal choice for the high volume OEM who requires an economical yet durable pressure transducer. The KM15 marries a proven polysilicon thin film sensor to a high performance ASIC to provide a highly accurate, stable, and rugged pressure sensing instrument.

PERFORMANCE SPECIFICATIONS

Ref. Condition 23°C ±2° (73°F)

Accuracy: Includes non-linearity, hysteresis, non-repeatability, zero offset and span setting errors – Terminal Point method:

±0.5% Span, 100 psig Span and above

±1.0% Span, 75 psig Span and below

Stability: ±0.25% Span/year

Interchangeability: < .5% Span

Durability: Tested to 50 million cycles

ENVIRONMENTAL SPECIFICATIONS

Temperature:

Storage	–40/120°C (–40/250°F)
Operating	–40/120°C (–40/250°F)
Compensated	–30/120°C (–25/250°F)

Humidity: 0/100%R.H., no effect

Thermal Coefficients: –30 to 120°C (–25 to +250°F)

Zero	Span
±0.01%/°C (±0.0055%/°F)	±0.01%/°C (±0.0055%/°F)

FUNCTIONAL SPECIFICATIONS

Ranges:

vac/0 psi*	0/15 psi	0/750 psi
vac/15 psi*	0/30 psi	0/1000 psi
vac/30 psi*	0/50 psi	0/1500 psi
vac/50 psi*	0/75 psi	0/2000 psi
vac/75 psi*	0/100 psi	0/3000 psi
vac/100 psi*	0/150 psi	0/5000 psi
vac/150 psi*	0/200 psi	0/7500 psi
vac/200 psi*	0/300 psi	
vac/300 psi*	0/500 psi	

Overpressure (F.S.):	Proof	Burst
750 psi & below	2 x range	10 x range
1500 psi	2 x range	5 x range
3000 psi	2 x range	5 x range
5000 psi	1.5 x range	5 x range
7500 psi	1.2 x range	5 x range

Vibration: Random to 1 KHz, 20 g's

Shock: 50 g's, 11 msec

Drop Test: No effect 1 meter drop on concrete

Response Time: Less than 1msec

Position Effect: Less than 0.01% F.S.

ELECTRICAL SPECIFICATIONS

Output Signal Options:

Output	Excitation	Supply Current
0.5-4.5 Vdc (ratiometric)	5 Vdc ± .5 Vdc	10mA typical
1-5 Vdc	8-32 Vdc	10mA typical

Reverse Polarity Protection: Yes

Insulation Breakdown Voltage: (Circuit to case) 150 Vac/1 min.

Insulation Resistance: (Circuit to Case) 100M ohm min.@50 Vdc.

Warm-up Time: <25 msec

Approvals/Certifications: CE, RoHS

PHYSICAL SPECIFICATIONS

Pressure Connection Options: see "To Order" below

Pressure Connection: 304 SS

Housing: 304 SS

Sensor Material: 17-4 PH SS

Electrical Termination: see "To Order" below

- Metri Pack 150 Series
- Shielded Cable
- Flying Lead
- Sumitomo HW090

Environmental Rating: IP67

Weight: Approx. 2 oz. (60g)

OPTIONS

Throttle screws

Custom mating harness

Special cleaning (for O_2)

Non-standard pressure ranges

Alternate process connections

Special calibration/accuracy

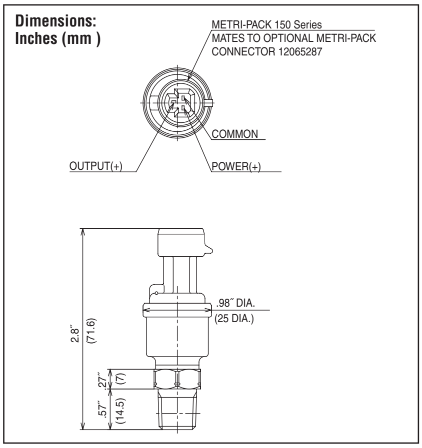

Shielded cable termination and flying lead termination is also available.

TO ORDER THE KM10 PRESSURE TRANSDUCER:

K M 1 5 | ☐ | ☐☐☐ | ☐☐ | ☐☐ | ☐☐☐☐☐☐ # | X ☐☐☐

Model Type
(KM15)

Accuracy Class
(5) 0.50% (100 psi & above)
(7) 1.0% (75 psi & below)

Pressure Connection
(MO1) ⅛ NPT-M
(MO2) ¼ NPT-M
(M38) ⅜-24 UNF-2A
(MEK) 7/16-20 UNF-2A
(FRW) 7/16-20 UNF-2B
(M10) M10 x 1
(M14) M14 x 1.5
(MR3) R ⅜
(MR2) R ¼
(MG3) G ⅜
(MG2) G ¼

Output Signal
(15) 1-5 Vdc
(RM) Ratiometric 0.5-4.5 Vdc

Electrical Termination
For Metri-Pack 150 Series Integral Connector
(GN) No mating connector
(G2) Mating connector w/36˝ cable
(G1) Mating connector w/custom length
For Shielded Cable
(F2) 36˝PVC sheath
(P1) Other length
For Flying Leads
(12) 12 inch length
(24) 24 inch length
(36) 36 inch length

Pressure Range

PSI	PSI*
Vac./0	0/100
Vac./15	0/150
Vac./30	0/200
Vac./50	0/300
Vac./75	0/500
Vac./100	0/750
Vac./150	0/1000
Vac./200	0/1500
Vac./300	0/2000
0/15	0/3000
0/30	0/5000
0/50	0/7500
0/75	

*Sealed Sensor

Special Features
(XTS) Throttle
(X6B) Oxygen cleaning
Additional Options
(Consult Factory)

Consult factory for guidance in product selection and minimum order quantities required
Phone (203) 378-8281 or visit our web site at www.ashcroft.com

ASHCROFT®

Type K1 Thin Film Pressure Transducer/Transmitter For Industrial Applications

APPLICATIONS:

Hydraulic, refrigeration, machine tool, test/measurement, pump control, HVAC, medical, construction equipment and all general purpose industrial process applications

BENEFITS & FEATURES:

- ***0.5% and 1.0% accuracy***
- ***Vac.-20,000 psi pressure range***
- ***FM approved (optional)***
- ***Superior long-term stability and repeatability***
- ***Stainless steel NEMA 4X enclosure***
- ***Current/voltage output***
- ***Wide range of electrical connections available***

The Ashcroft® K1 is a proven and versatile pressure transducer/transmitter incorporating polysilicon thin film technology. Modern low-pressure chemical vapor deposition methods provide simple, stable molecular bonds between a proven metal diaphragm and a polysilicon strain gage bridge. There are no epoxies or bonding agents to contribute to signal instability or drift.

The integral metal diaphragm and polysilicon bridge are virtually unaffected by shock, vibration or mounting.

These transmitters are offered in many standard pressure ranges with either current or voltage output signals. Transmitter performance is directly traceable to the National Institute of Standards and Technology and specifications are conservatively stated. A calibration test certificate is available with each transmitter.

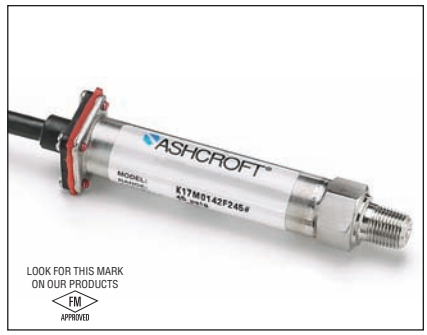

PERFORMANCE SPECIFICATIONS

Accuracy Class (Span):
See page 270-271 for definitions

Includes non-linearity (Terminal Point Method), hysteresis, non-repeatability, zero offset and span setting errors	±0.5%	±1.0%
Interchangeability	±0.5%	±1.0%

Durability: 10^8 cycles with negligible performance change

Stability: ±0.5% Span/yr

ENVIRONMENTAL SPECIFICATIONS

Temperature Limits:

Storage:	–54 to 121°C	(–65 to +250°F)
Operating:	–28 to 82°C	(–20 to +180°F)
Comp. Range:	–28 to 71°C	(–20 to +160°F)

Thermal Coefficients: (68°F (20°C) ref.)
% Span/°F
Standard:

	0.5%	1%
ZERO	±0.028%	±0.04%
SPAN	±0.028%	±0.04%

Optional:

ZERO	±0.014%	N/A
SPAN	±0.014%	N/A

Multiply thermal zero coefficients by 1.5 on 0/30 psi, vac/15 range and by 3 on 0/15 and vac/0 ranges

Humidity:
No performance effect at 95% relative humidity-noncondensing

FUNCTIONAL SPECIFICATIONS

Standard Ranges (psi) gauge, compound:

0/15*	0/300	0/5000*	vac./60*
0/30*	0/500	0/7500*	vac./45*
0/60*	0/750	0/10,000*	vac./30*
0/100	0/1000	0/15,000*	vac./15*
0/150	0/2000	0/20,000*	vac./0*
0/200	0/3000		

*1% accuracy ranges only.
Consult factory for nonstandard ranges.

Overpressure Limits (F.S.):

	15-2000	3000-5000	7500-20,000
Proof	200%	150%	120%
Burst	800%	300%	150%

Vibration Sweep:
Less than ±0.1% Span effect for 0-2000 Hz at 20 g's in any axis

Shock: Less than ±0.05% Span effect for 100 g's, 20ms shock in any axis

Response Time: Less than 5 ms

Position Effect: Less than 0.01% Span

ELECTRICAL SPECIFICATIONS

Output Signal (consult factory for options):
4-20mA (2 wire)
1-5 Vdc (3 wire)
1-6 Vdc (3 wire)
1-11 Vdc (3 wire) (minimum excitation 15 Vdc)

Power Requirements: 10-36 Vdc unregulated, <3mA for voltage output

PHYSICAL SPECIFICATIONS

Environmental Rating: NEMA 4X (NEMA 1 only if <500 psig if electrical termination is Bendix® or Hirschmann®)

Weight: 2 oz. (approx. w/o cable)

Reverse Polarity Protected
Supply Current: <3mA for voltage output

MATERIALS:

Case: 300 series stainless steel

Cable: No. 24 AWG, 36˝ PVC, shielded, vented, UL approved

Diaphragm: 17-4 PH stainless steel

Standard Process Connections: (316 stainless steel)
1/8 NPT male or female
1/4 NPT male or female
1/4 SAE-J-514 (male)
9/16-18 UNF 2B AMINCO (female) required for pressures over 10,000 psi
Other connections available

HAZARDOUS LOCATION CERTIFICATIONS

Factory Mutual (FM) Approvals*
Intrinsically Safe for use in:
Class I, II, III, Div. 1, Groups A, B, C,D, F, G when used with safety barriers in accordance with Ashcroft drawing 71B212 Sht (1-3).
Nonincendive for: Class I, Div. 2, Groups A, B, C, D
Special Protection for: Class II, III, Div. 2, Group F, G

***Note:** Available with 4-20mA output only

TO ORDER THIS TYPE K1 TRANSDUCER/TRANSMITTER:

Select: K 1 ☐ ☐☐☐ ☐ ☐ ☐☐☐☐☐ ☐☐

1. Type Configuration (K1)

2. Accuracy/TC
(3) 0.50%, ±0.014%/°F **(5)** 0.50%, ±0.028%/°F
(7) 1.0%, ±0.040%/°F

3. Pressure Connection
(M01) 1/8 NPT-M **(F01)** 1/8 NPT-F **(M02)** 1/4 NPT-M **(F02)** 1/4 NPT-F
(MEK) 7/16 -20-M **(FO9)** aminco 9/16-18-Female

4. Output Signal
(42) 4-20mA **(15)** 1/5 Vdc **(16)** 1/6 Vdc **(11)** 1/11 Vdc

5. Electrical Termination
(F2) 36˝ cable, shielded, PVC sheathing **(B4)** Bendix 4-pin # PT02A-8-4P* **(HM)** Hirschmann miniature
(B6) Bendix 6-pin # PT02A-10-6P* **(B8)** WP Bendix 4-pin # PT02E-8-4P*
(B9) WP Bendix 6-pin # PT02E-10-6P* **(C1)** 1/2 NPT-M Conduit w/36˝ Cable

6. Pressure Range
(Vac./0) Vac./0 through **(20000)** 20,000 psi (see standard ranges). Call for more options.

7. Hazardous Area Approvals
(XFM) FM Approval Option: 4-20mA output only

*Mating connector available as necessary

Consult factory for guidance in product selection
Phone (203) 378-8281 or visit our
web site at www.ashcroft.com

ASHCROFT®

Type K2 Thin Film Pressure Transducer with Conditioned MilliVolt Output

APPLICATIONS:

Hydraulic, machine tool, test and measurement, and all general pur-pose industrial process applications

BENEFITS & FEATURES:

- ***0.5% and 1.0% accuracy***
- ***Vac.-20,000 psi pressure range***
- ***Superior long-term stability and repeatability***
- ***Stainless steel NEMA 4X enclosure***
- ***Conditioned millivolt output***
- ***Wide range of pressure and electrical connections available***

The K2 is similar to the K1 Series except offering mV/V output options. The K2 is a proven and versatile pressure transducer incorporating polysilicon thin film technology. Modern low- pressure chemical vapor deposition methods provide simple, stable molecular bonds between a proven metal diaphragm and a polysilicon strain gage bridge. There are no epoxies or bonding agents to contribute to signal instability or drift.

The integral metal diaphragm and polysilicon bridge are virtually unaffected by shock, vibration or mounting.

These transducers are offered in many standard pressure ranges with high-quality millivolt output signal ratiometric to supply voltage. Transducer performance

is directly traceable to the National Institute of Standards and Technology and specifications are conservatively stated. A calibration test certificate is available with each transducer.

PERFORMANCE SPECIFICATIONS

Accuracy Class (Span):
See page 258-259 for definitions

Includes non-linearity (Terminal Point Method), hysteresis, non-repeatability errors	±.5%	±1.0%
Interchangeability	±.5%	±1.0%

Durability: 10^8 with negligible performance change
Stability: ±0.5% Span/yr

ENVIRONMENTAL SPECIFICATIONS

Temperature Limits:

Storage:	–54 to 121°C	(–65 to +250°F)
Operating:	–28 to 82°C	(–20 to +180°F)
Comp. Range:	–28 to 71°C	(–20 to +160°F)

Thermal Coefficients:
(68°F (20°C) ref.) %Span/°F
Standard:

	0.5%	1%
ZERO	±0.028%	±0.04%
SPAN	±0.028%	±0.04%

Optional:

ZERO	±0.014%	N/A
SPAN	±0.014%	N/A

Multiply zero thermal coefficients by 1.5 on 0/30 psi range and by 3 and 0/15 and vac/0 ranges

Humidity:
No performance effect at 95% relative humidity – noncondensing

FUNCTIONAL SPECIFICATIONS

Standard Ranges (psi)

0/15*	0/300	0/5000*	vac./60*
0/30*	0/500	0/7500*	vac./45*
0/60*	0/750	0/10,000*	vac./30*
0/100	0/1000	0/15,000*	vac./15*
0/150	0/2000	0/20,000*	vac./0*
0/200	0/3000		

*1% accuracy ranges only.
Consult factory for nonstandard ranges.

Overpressure Limits (F.S.):

	15-2000	3000-5000	7500-20.000
Proof	200%	150%	120%
Burst	800%	300%	150%

Vibration: Less than ±0.1% Span effect for 0-2000 Hz at 20 g's in any axis
Shock: Less than ±0.05 Span effect for 100 g's, 20 ms shock in any axis

Response Time: Less than 5 ms
Position Effect: Less than 0.01% Span

ELECTRICAL SPECIFICATIONS

Output (Sensitivity):
2mV/V
3mV/V
10mV/V
20mV/V
Power Requirements: 5-10 Vdc regulated, <3mA
Zero Offset: ±0.5% Span or ±1.0% Span dependent on accuracy class
Circuit to Case Insulation Resistance:
100 M ohms @ 50 Vdc

PHYSICAL SPECIFICATIONS

Environmental Rating: NEMA 4X
(NEMA 1 only if <500 psig if electrical termination is Bendix® or Hirschmann®)
Weight: 2 oz. (approx. w/o cable)

MATERIALS:
Case: 300 series stainless steel
Cable: No. 24 AWG, 36˝ PVC, shielded, vented, UL approved
Diaphragm: 17-4 PH stainless steel
Standard Process Connections:
(316 stainless steel)
1/8 NPT male or female
1/4 NPT male or female
1/4 SAE-J-514 male
1/4 AMINCO female required for pressures over 10,000 psi
Other connections available
Shunt calibration feature is available as an option. Calibration report is standard with 0.5% and optional with 1% accuracy units. Consult factory for pricing, availability and required minimums for nonstandard products.

Bendix® is a registered trademark of Amphenol Corp.
Hirschmann® is a registered trademark of Richard Hirschmann of America Inc.

TO ORDER THIS TYPE K2 TRANSDUCER:

Select: K 2 ☐ ☐☐☐ ☐☐ ☐☐ ☐☐☐☐☐☐

1. Type Configuration (K2)

2. Accuracy/TC
(3) 0.50%, ±0.014%/°F **(5)** 0.50%, ±0.028%/°F
(7) 1.0%, ±0.040%/°F

3. Pressure Connection
(M01) 1/8 NPT-M **(F01)** 1/8 NPT-F **(M02)** 1/4 NPT-M **(F02)** 1/4 NPT-F
(MEK) 7/16-20 SAE-J-514 **(F09)** aminco 9/16-18-Female

4. Sensitivity
(02) 2mV/V **(03)** 3mV/V **(10)** 10mV/V **(20)** 20mV/V

5. Electrical Termination
(F2) 36˝ cable, shielded, PVC sheathing **(B4)** Bendix 4-pin # PT02A-8-4P*
(B6) Bendix 6-pin # PT02A-10-6P* **(C1)** 1/2 NPT-M Conduit w/36˝ cable **(HM)** Hirschmann miniature

6. Pressure Range
(Vac./0) Vac./0 through **(20000)** 20,000 psi (see standard ranges). Call for more options.
*Mating connector available as necessary

Consult factory for guidance in product selection
Phone (203) 378-8281 or visit our
web site at www.ashcroft.com

ASHCROFT®

Type K8 Thin Film Pressure Transducer with Unconditioned MilliVolt Ouput

APPLICATIONS:

Hydraulic, hand tools, machine tool, compressor, HVAC, medical, control valves, construction equipment and all general purpose industrial process and OEM applications

BENEFITS & FEATURES:

- ***0.5% and 1.0% accuracy***
- ***45-20,000 psi pressure ranges***
- ***Superior long-term stability and repeatability***
- ***Wide range of pressure and electrical connections available***
- ***Miniature size and light weight***
- ***Millivolt output***

The Ashcroft® K8 is a proven pressure transducer incorporating polysilicon thin film technology. Modern low-pressure chemical vapor deposition methods provide simple, stable molecular bonds between a proven metal diaphragm and a polysilicon strain gage bridge. There are no epoxies or bonding agents to contribute to signal instability or drift.

The K8 is offered in many standard pressure ranges with high quality millivolt output. Signal output is proportional to supply voltage, and sensitivity varies between 6-18 mV/V at full scale. Transducer performance is directly traceable to the National Institute of Standards and Technology.

PERFORMANCE SPECIFICATIONS

Accuracy Class (Span):
See page 270-271 for definitions

Includes non-linearity (Terminal Point Method), hysteresis, non-repeatability	±.5%	±1.0%

Durability: 10^8 cycles with negligible performance change

Stability: ±0.5% Span/yr

ENVIRONMENTAL SPECIFICATIONS

Temperature Limits:

Storage:	–54 to 121°C	(–65 to +250°F)
Operating:	–28 to 82°C	(–20 to +180°F)
Comp. Range:	–28 to 82°C	(–20 to +180°F)

Thermal Coefficients:
(68°F (20°C) ref.) %Span/°F

Standard:	**0.5%**	**1%**
ZERO	±0.028%	±0.04%
SPAN	±0.028%	±0.04%
Optional:		
ZERO	±0.014%	N/A
SPAN	±0.014%	N/A

Humidity:
No performance effect at 95% relative humidity – noncondensing

FUNCTIONAL SPECIFICATIONS

Standard Ranges (psi)

0/45*	0/300	0/3000	0/20,000*
0/60*	0/500	0/5000*	
0/100	0/750	0/7500*	
0/150	0/1000	0/10,000*	
0/200	0/2000	0/15,000*	

*1% accuracy ranges only.
Consult factory for nonstandard ranges.

Overpressure Limits (F.S.):

	45-2000	**3000-5000**	**7500-20,000**
Proof	200%	150%	120%
Burst	800%	300%	150%

Vibration Sweep:
Less than ±0.1% Span effect for 0-2000 Hz at 20 g's in any axis

Shock: Less than ±0.05% Span effect for 100 g's, 20ms shock in any axis

Response Time: Less than 5 ms

Position Effect: Less than 0.01% Span

ELECTRICAL SPECIFICATIONS

Output Sensitivity: Output signal varies from 6-18mv/V at full scale, output proportional to supply voltage.

Excitation: 3-10 Vdc regulated

Supply Current: 1.4mA (nominal)

Zero Offset: ±3mV/Vdc

Bridge Resistance: 3500 ohms (nominal)

Circuit to Case Insulation Resistance:
100 M ohms @ 50 Vdc

PHYSICAL SPECIFICATIONS

Weight: 2 oz (approx. without cable F1 Type)

MATERIALS:

Socket: 300 series stainless steel

Cable: 4˝ polyethylene coated, 30 AWG or UL approved 36˝, shielded, vented cable (24 AWG)

Diaphragm: 17-4 PH stainless steel

Standard Process Connections:
(316 stainless steel)
1/8 NPT male or female
1/4 NPT male or female
1/4 SAE-J-514 (male)
1/4 AMINCO (female) required for pressures over 10,000 psi
Other connections available

DIMENSIONS:

FIG. 1
F2 Electrical Termination

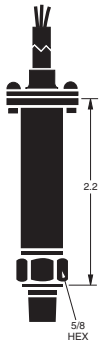

FIG. 2
F1 Electrical Termination

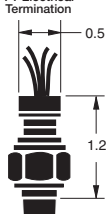

FIG. 3
F1 Electrical Termination

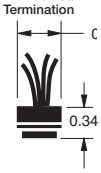

TO ORDER THIS TYPE K8 TRANSDUCER:

Select:

1. Type Configuration (K8) — **K 8**

2. Accuracy/TC
(3) 0.50%, ±0.014%/°F **(5)** 0.50%, ±0.028%/°F
(7) 1.0%, ±0.040%/°F

3. Pressure Connection
(M01) 1/8 NPT-M **(F01)** 1/8 NPT-F **(M02)** 1/4 NPT-M **(F02)** 1/4 NPT-F
(MEK) 7/16-20 SAE-J-514 **(F09)** 9/16-18 UNF **(T01)** 1/4 Comp. Fit **(000)** None

4. Sensitivity — **M V**
(MV) mV/V

5. Electrical Termination
(F1) 4˝ leads, see Fig. 2/3 for dimensions **(F2)** 36˝ shielded PVC jacketed cable, see Fig. 1 for dimensions

6. Pressure Range
(45) 45 psi through **(20000)** 20,000 psi (see standard ranges).

Consult factory for guidance in product selection
Phone (203) 378-8281 or visit our
web site at www.ashcroft.com

ASHCROFT®

Type KX Flush Mount Thin Film Pressure Transducer/Transmitter For Pulp and Paper Applications

APPLICATIONS:

Pulp/paper, waste water, spray booths and all heavy medium pumping processes

BENEFITS & FEATURES:

- ***Available with PMC adapter (shown)***
- ***Flush-mounted integral 316 stainless steel diaphragm***
- ***Stainless steel NEMA 4X enclosure***
- ***Current/voltage output***

The Ashcroft® KX transmitter combines the proven benefits of poly-silicon thin film performance with the utility of a flush-mounting sensing diaphragm. Modern low-pressure chemical vapor deposition methods provide simple, stable molecular bonds between a proven metal diaphragm and a polysilicon strain gage bridge. There are no epoxies or bonding agents to contribute to signal instability or drift.

The flush sensing element is provided by an integral, silicone filled stainless steel diaphragm seal. The small sensing area and low internal volume ensure accurate measurement under severe conditions.

The polysilicon strain resistors combine very low noise levels with very high signal output. There are no semiconductor (p-n) junctions to change with temperature, time or use. The integral metal diaphragm and polysilicon bridge are virtually unaffected by shock, vibration or mounting position.

These transmitters are offered in many standard pressure ranges with either current or voltage output signals. Transmitter performance is directly traceable to the National Institute of Standards and Technology and specifications are conservatively stated.

PERFORMANCE SPECIFICATIONS

Accuracy Class (Span):
Includes non-linearity, (Terminal Point Method), hysteresis, non-repeatability, zero offset and span setting errors) ±1%

Best fit straight line (BFSL) ±0.75%

ENVIRONMENTAL SPECIFICATIONS

Temperature

Storage	–65/+250°F
Operating	–20/+180°F
Compensated	–20/+160°F

Thermal Coefficients: (68°F ref.) % Span/°F
Standard:

ZERO	±0.04%
SPAN	±0.04%

Humidity:
No performance effect at 95% relative humidity – noncondensing

FUNCTIONAL SPECIFICATIONS

Standard Ranges (psi)

0/100	0/500	0/3000
0/150	0/750	0/5000
0/200	0/1000	
0/300	0/2000	

Consult factory for nonstandard ranges.

Overpressure: (F.S.)	0/100-0/2000	0/3000-0/5000
Proof	200%	150%
Burst	800%	300%

Vibration Sweep:
Less than ±0.1% Span effect for 0-400 Hz at 20 g's in any axis

Shock:
Less than ±0.1% Span effect for 20 g's 20ms shock in any axis

ELECTRICAL SPECIFICATIONS

Output Signal:
4-20mA (2 wire)
1-5 Vdc (3 wire)
1-6 Vdc (3 wire)

Power Requirements:
10-36 Vdc unregulated

Supply Current:
Less than 3mA for voltage output

Output Impedance: 100 ohms

Circuit to Case Insulation Resistance:
100 M ohms @ 50 Vdc

PHYSICAL SPECIFICATIONS

Environmental Rating: NEMA 4X

Weight:
10 oz (approx. without cable)

MATERIALS

Case: 300 series stainless steel

Connection: 316 stainless steel

Cable:
No. 24 AWG, 36 PVC, shielded, vented, UL approved

Diaphragm: 316Ti stainless steel

Standard Process Connection:
G-1/2 metric pipe thread*
O-ring seal (max. 150 psi)
1/2 NPT male pipe thread used in conjunction with XWB, XWC and XWE screw-on adapters
*Mating connector available upon request

OPTIONS

Flush weldnut (XWB)
Recessed weldnut (XWC)
Weldnut plug (XWD)
Paper mill adapter (shown in photo) (XWE)
Halocarbon fill (XWG)

Warning: Sensitive Diaphragm

TO ORDER THIS TYPE KX TRANSDUCER/TRANSMITTER:

Select: K X 7 ☐☐☐ ☐☐ ☐☐ ☐☐☐☐☐ ☐☐☐

1. **Type Configuration (KX)**
2. **Accuracy**
   (7) 1.0%, ±0.04%/°F
3. **Pressure Connection**
   (MG4) G 1/2 **(RS1)** O-Ring Seal (max. 150 psi) **(M04)** 1/2 NPT M
4. **Output Signal**
   (15) 1-5 Vdc **(16)** 1-6 Vdc **(42)** 4-20mA
5. **Electrical Termination**
   (C1) 1/2 NPT-M Conduit w/36˝ cable **(DN)** 43650 connector **(RT)** 1/2 NPT with RTD Head (4-20mA only)
   (M1) DIN 43650 with mating connector G4WIF **(M2)** DIN 43650 with mating connector G4WIF w/36˝ cable
6. **Pressure Range** (See standard ranges)
7. **Optional X-Variations** (See above options)

Consult factory for guidance in product selection
Phone (203) 378-8281 or visit our web site at www.ashcroft.com

ASHCROFT®

Type KS Thin Film Pressure Transducer/Transmitter For Sanitary Applications

APPLICATIONS:

Dairy, food, pharmaceutical and any 3A sanitary application

BENEFITS & FEATURES:

- ***316L stainless steel electropolished (1½˝-2˝) Tri-Clamp® style diaphragm***
- ***Vac.-1000 psi pressure range***
- ***Stainless steel NEMA 4X enclosure***
- ***Superior long-term stability and repeatability***
- ***Current/voltage/millivolt output***
- ***Wide range of electrical connections available***
- ***All-welded construction***

Ashcroft® combines the proven polysilicon thin film technology with its longtime know-how of diaphragm seals to create the KS sanitary pressure transmitter. The all-welded stainless steel construction meets the 3A Sanitary Standard 74-02.

The KS Sanitary Pressure Transmitter features the benefits of polysilicon thin film performance at an affordable price. Modern chemical vapor deposition methods provide simple, stable, molecular bonds between a proven metal diaphragm and polysilicon strain gage bridge. There are no epoxies or bonding agents to contribute to signal instability or drift.

The integral metal diaphragm and polysilicon bridge are virtually unaffected by shock, vibration or mounting position.

PERFORMANCE SPECIFICATIONS

Accuracy Class (Span):
Includes non-linearity, (Terminal Point Method), hysteresis, non-repeatability, zero offset and span setting errors) 1%

Best fit straight line (BFSL) ±0.75%

ENVIRONMENTAL SPECIFICATIONS

Temperature

Storage	–65/+250°F	(–54 to +120°C)
Operating	–20/+180°F	(–28 to +82°C)
Compensated	+30/+130°F	(0 to +50°C)

Thermal Coefficients: (68°F (20°C) ref.) % Span/°F
Standard:

ZERO	±0.04%
SPAN	±0.04%

Humidity:
No performance effect at 95% relative humidity – noncondensing

FUNCTIONAL SPECIFICATIONS

Standard Ranges (psi)

0/30*†	0/300†	vac./30*†
0/60*†	0/500	vac./60*†
0/100†	0/750	vac./100†
0/150†	0/1000	
0/200†		

Consult factory for nonstandard ranges.

*T/C multiply by 1.5 times.
†NEMA 4X only with F2 and C1 electrical connections.

Overpressure: (F.S.)

Proof	200%
Burst	800%

Vibration Sweep:
Less than ±0.1% Span effect for 0-2000 Hz at 20 g's in any axis

Shock:
Less than ±0.05% Span effect for 100 g's, 20ms shock in any axis

Position Effect: Less than 0.01% Span

ELECTRICAL SPECIFICATIONS

Transmitter Output Signal:
4-20mA (2 wire)
1-5 Vdc (3 wire)
1-6 Vdc (3 wire)

Supply Current:
Less than 3mA for voltage output

Power Requirements:
10-36 Vdc unregulated
Reverse polarity protected

Transducer Output Signal:
2m V/V ratiometric
3m V/V ratiometric
10m V/V ratiometric
20m V/V ratiometric

Power Requirements: 5-10 Vdc regulated

Circuit to Case Insulation Resistance:
100 M ohms @ 50 Vdc

PHYSICAL SPECIFICATIONS

Environmental Rating: NEMA 4X

Weight:
13.5 oz (approx. without cable)

MATERIALS

Case: 300 series stainless steel

Cable:
No. 24 AWG, 36˝ PVC, shielded, vented, UL approved

Diaphragm: 316L stainless steel

Standard Process Connections:
316L stainless steel electropolished Tri-Clamp® style 1½˝, 2˝

Fill: USP grade 99.5% glycerin fill, contact factory for other fill fluids

Consult factory for pricing, availability and required minimums for nonstandard products.

WARNING! Sensitive Diaphragm!

TO ORDER THIS TYPE KS TRANSDUCER/TRANSMITTER:

Select: K S 7 ☐☐☐ ☐☐ ☐☐ ☐☐☐☐☐

1. Type Configuration (KS)

2. Accuracy/TC
(7) 1.0%, ±0.040%/°F

3. Sanitary Seal
(S15) 1½ inch Sanitary Connection **(S20)** 2 inch Sanitary Connection

4. Output Signal
(42) 4-20mA **(16)** 1/6 Vdc **(15)** 1/5 Vdc **(02)** 2mV/V
(03) 3mV/V **(10)** 10mV/V **(20)** 20mV/V

5. Electrical Termination
(F2) 36˝ cable, shielded, PVC sheathing **(B4)** Bendix 4-pin # PT02A-8-4P*
(B6) Bendix 6-pin # PT02A-10-6P* **(B8)** WP Bendix 4-pin # PT02E-8-4P*
(B9) WP Bendix 6-pin # PT02E-10-6P* **(C1)** ½ NPT-M Conduit w/36˝ cable **(HM)** Hirschman miniature

6. Pressure Range
(Vac./30) vac./30 through **(1000)** 1000 psi (see standard ranges).

*Mating connector available as necessary

Consult factory for guidance in product selection
Phone (203) 378-8281 or visit our
web site at www.ashcroft.com

ASHCROFT®

Model GC30 Ultra-Compact Digital Differential Pressure Sensor

APPLICATIONS

The GC30 utilizes Ashcroft's proven, typically required in:

- ***Filter monitoring***
- ***Clean room pressure differential***
- ***Vacuum/suction pressure sensing and control***
- ***Fan speed control***

FEATURES

- ***Ultra-compact design 1.2˝ x 1.2˝ (30mm x 30mm)***
- ***Combined three-in-one digital pressure gauge, switch and transducer***
- ***Simple "Push-Button" configurability allows user to adjust switch settings, analog scaling***
- ***Numerous standard ranges available***

LOOK FOR THIS MARK ON OUR PRODUCTS

PERFORMANCE SPECIFICATIONS

Analog Output (1-5Vdc):
Accuracy: ± 1.5% Span
(accuracy includes effects of linearity, hysteresis and repeatability)
Response Time: 50msec
Output Resolution: 25mV
Analog Scaling: User may configure analog output scaling to any range within full scale of sensor range
Pressure Switch Output:
Type: NPN or PNP open collector up to 30Vdc/80ma
Setting Accuacy: ±1.5% Span
Number of Contacts: 2
Time Delay: 5 msec –2.0 sec (by user)
Hysteresis: Variable (by user)
Switch Setting: User may adjust switch actuation and deadband to any points within full scale sensor range
Display:
Type: 3½ digit, 10mm LED
Accuracy: ± 1.5% Span + last digit
Display Setting: User may re-configure display scaling, set to capture MIN or MAX value, and adjust display update rate
Inches of Water Column (˝W.C.) Ranges:
Standard Ranges (Gauge):
0 to 0.25˝W.C., 0.50˝W.C., 1.0˝W.C., 2.5˝ W.C., 5.0˝W.C., 10˝W.C., 25˝W.C.
Standard Ranges (Compound):
±0.25˝W.C., ±0.50˝W.C., ±1.0˝W.C., ±2.5˝ W.C., ±5.0˝W.C., ±10˝W.C., ±25˝W.C.i

ENVIRONMENTAL SPECIFICATIONS

Temperature Limits:
Storage: –22 to 140°F (–30 to 60°C)
Operating: –4 to 140°F (–20 to 60°C)
Compensated: 14 to 122°F (–10 to 50°C)
Temperature Effects:
Zero/Span: (from 73°F/23°C reference temperature) ±0.09%/°F (±0.15%/°C) ±2.5˝W.C., 0/2.5˝W.C. and below
±0.06%/°F (±0.10%/°C) ±5.0˝W.C., 0/5.0˝W.C. and above

FUNCTIONAL SPECIFICATIONS

Proof Pressure: 7.5psid (50kPa)
Burst Pressure: 25psig (170kPa)
Max Static (Line) Pressure: 7.5psi (50kPa)
Approvals/Certifications: CE, RoHS

ELECTRICAL SPECIFICATIONS

Power Supply Requirements:
Supply Voltage: 11-27Vdc
Current Consumption: 30mA (max)
Switch Contacts: (2) NPN or PNP open collector outputs
NPN Type: 30Vdc / 80mA (max)
PNP Type: voltage drop 1Vdc (max)/80mA (max)

MECHANICAL SPECIFICATIONS

Pressure Connection: 4mm barb
Enclosure: ABS, polycarbonate, aluminum
Environmental Rating: IP40
Electrical Connection: 6ft (2m) cable pigtail
Weight: Approx. 75 grams
Mounting: Panel mounting bracket included
Media: Clean, dry air/gases compatible with Aluminum, ABS, Ceramic, Silicon, and Silicone RTV

TO ORDER THE GC30 ULTRA-COMPACT DIGITAL DIFFERENTIAL PRESSURE SENSOR:

G C 3 0	9	M 5 B		F 4		X
Type (GC30)	**Accuracy** **(9)** ±1.5%	**Connection** **(M5B)** 4mm ID Barb	**Output Signal** **(1N)** 1-5Vdc: Analog w/2X NPN Type switches **(1P)** 1-5Vdc: Analog w/2X PNP Type switches	**Electrical Connection** **(F4)** 6´ (2m) cable	**Pressure Ranges** **Diff. or Gauge:** (P25IW) 0.25˝W.C. (P5IW) 0.50˝W.C. (1IW) 1.0˝W.C. (2P5IW) 2.5˝W.C. (5IW) 5.0˝W.C. (10IW) 10˝W.C. (25IW) 25˝W.C. **Compound:** (P25IWL) ±0.25˝W.C. (P5IWL) ±0.50˝W.C. (1IWL) ±1.0˝W.C. (2IWL) ±2.5˝W.C. (5IWL) ±5.0˝W.C. (10IWL) ±10˝W.C. (25IWL) ±25˝W.C.	**Optional X-Variations** **XRH** 9 pt. NIST traceable calibration certificate **X6B** Oxygen cleaned

Consult factory for guidance in product selection
Phone (203) 378-8281 or visit our
web site at www.ashcroft.com

ASHCROFT®

Model GC52 Rangeable Wet/Wet Differential Pressure Transmitter

APPLICATIONS

The GC52 utilizes Ashcroft's proven Si-Glas™ silicon variable capacitance sensor technology in a wet-wet package ideal for applications where reliable, low differential pressure measurement is required with line (static) pressure to 300 psi.

Applications include:

- ***Pressurized & non-pressurized tank levels***
- ***Flow (liquid/gas) measurement***

FEATURES

- ***Up to 8 times smaller than a conventional process transmitter***
- ***Robust NEMA 4X (IP65) aluminum die cast housing***
- ***Bright backlit 4 digit LCD display***
- ***2 Wire 4-20mA***
- ***Flow measurement and totalization (square root extraction)***
- ***Internal "Push Button" configurability allows quick range changes***
- ***Scaling function allows display to indicate arbitrary physical units***
- ***Easily rotatable display, 90° increments***
- ***Square root extractions for flow measurements***
- ***Key lock***

CE
LOOK FOR THIS MARK ON OUR PRODUCTS

PERFORMANCE SPECIFICATIONS

Reference Condition: 23°C ±2° (73°F)

Accuracy: ±0.50% Span (URL)
(Accuracy includes the effects of linearity, hysteresis, and repeatability)

Stability: ±0.25% Span/year

Response Time: 100msec (user adjustable)

Output Resolution: 0.1% Span (URL)

Standard Ranges (Bi-Directional, Inches W.C.):
±4, ±8, ±20, ±40, ±80, ±200

Standard Ranges (Uni-Directional, Inches W.C.):
0-4, 8, 20, 40, 80, 200, 400

ENVIRONMENTAL SPECIFICATIONS

Temperature Limits:
Storage: –15 to 65°C (5 to 150°F)
Operating: –10 to 60°C (14 to 140°F)
Compensated: –10 to 60°C (14 to 140°F)
Temperature Effects (–10 to 60°C):
±0.03% FS/C° (from reference, 23°C (73°F)

FUNCTIONAL SPECIFICATIONS

Static (Line) Pressure:

Pressure Range	Proof	Burst
All	300 psi	800 psi

Static (Line) Pressure Effects:

Pressure Range	Effect
≥20˝W.C., ±8˝ W.C.	±0.3% FS/100psi
8˝W.C., ±4˝ W.C.	±0.7% FS/100psi
4˝W.C.	±1.5% FS/100psi

Single Side (Differential) Limits:

Pressure Range	Proof	Burst
≤8˝ W.C., ±4˝ W.C.	30 psid	130 psid
≥20˝ W.C., ±8˝ W.C.	100 psid	130 psid

Vibration: 5g's 150Hz
Shock: 10g's 16ms

ELECTRICAL SPECIFICATIONS

Output Signal: 4-20mA (2 Wire)
Supply Voltage: 12-32Vdc
Rangeablility / Adjustment*:
Zero –10% to +110% Span
Span –10% to +110% Span
***Note:** Accuracy and output resolution based upon full scale (URL) value
Insulation Resistance: 50Vdc (>100Mohms)
Approvals/Certifications: CE

MECHANICAL SPECIFICATIONS

Pressure Connection: ¼˝ Female NPT
Enclosure: Aluminum
Environmental Rating: IP65 / NEMA 4X
Electrical Connection:
External Options:
– ½˝ Female NPT Conduit
– Cable Gland (Cable Diameters 0.35˝ to 0.47˝)
Weight: Approx. 1.0 lb
Mounting: Mounting Bracket included
Media: Fluids and gases compatible with 316SS, Viton and Alumina Ceramic

TO ORDER THE GC52 PRESSURE TRANSMITTER:

G	C	5	2	7										X		

Type Configuration (GC52)

Accuracy
(7) ±0.50% Span

Pressure Fitting
(F02) ¼˝ FNPT

Output Signal
(42) 4-20mA

Electrical Connection
(CG) = Cable Gland
(CD) = ½˝ FNPT Conduit

Pressure Ranges (Compound/Bidirectional)
4IWL = ±4˝W.C.
8IWL = ±8˝ W.C.
20IWL = ±20˝ W.C.
40IWL = ±40˝ W.C.
80IWL = ±80˝ W.C.
200IWL = ±200˝ W.C.

Pressure Range (Differential Gauge)
4IW = 0-4˝W.C.
8IW = 0-8˝ W.C.
20IW = 0-20˝ W.C.
40IW = 0-40˝ W.C.
80IW = 0-80˝ W.C.
200IW = 0-200˝ W.C.
400IW = 0-400˝ W.C.

Optional X-Variations
XRH
9 pt. NIST traceable calibration certificate

Consult factory for guidance in product selection
Phone (203) 378-8281 or visit our web site at www.ashcroft.com

ASHCROFT®

CXLdp Differential Pressure Transmitter

APPLICATIONS

Static or velocity pressure measurement for four stations, ducts, building pressure, filter efficiency, VAV boxes or room pressurization

EXCLUSIVE CXLdp FEATURES:

- ***Rugged ABS package capable of DIN rail or standard panel mounting***
- ***LED power status indicator to assist in trouble shooting, correct wiring or quickly locating the instrument on a duct***
- ***Detachable Euro style terminal block reduces wiring errors and field wiring time***
- ***20 standard pressure ranges all capable of withstanding 15 psi without damage or calibration change***
- ***Digitally compensated. NIST traceable 0.4% Span and 0.8% Span accuracy models***
- ***RoHS compliant***

The Ashcroft® CXLdp transmitter uses the patented Ashcroft Si-Glas™ variable capacitance sensor. This MEMS sensor provides extraordinary sensitivity and long term stability. New digital compensation is accomplished using a highly reliable application specific integrated circuit (ASIC).

PERFORMANCE SPECIFICATIONS

Reference Temperature: 70°F ±2°F (21°C ±1°C)
Accuracy Class (Span): ±0.8% ±0.4%
Includes non-linearity, hysteresis, non-repeatability, zero offset and span setting errors.
Stability – Max. Change (Span/year): ±0.25%
Standard Ranges (Inches W.C.)
Unidirectional Ranges:
Differential

0/0.1	0/1.0	0/5.0
0/0.25	0/2.0	0/10.0
0/0.5	0/2.5	0/15.0
0/0.75	0/3.0	0/25.0

Bidirectional Ranges:
Compound

±0.1	±1.0	±10.0
±0.25	±2.0	±15.0
±0.5	±5.0	

Response Time: 250 msec

ENVIRONMENTAL SPECIFICATIONS

Temperature Limits:

Storage	–40 to 180°F (–40 to 82°C)
Operating	+0 to 160°F (–15 to 70°C)
Compensated Range	+35 to 130°F (0 to 55°C)

(10-95% R.H. non-condensing)
Temperature Coefficients:
Zero & Span ±0.03% Span/°F

FUNCTIONAL SPECIFICATIONS

Overpressure Limits:

Proof Pressure	15 psid
Burst Pressure	25 psid
Max. static line pressure	25 psi

Mounting Position Effect: ±1% /g (lowest range)
Note: Calibration in vertical position is standard
Approvals/Certifications: CE, RoHS

ELECTRICAL SPECIFICATIONS

Output Signal:	**Power:**
4-20mA (2 wire)	12-36 Vdc (unregulated)
0-10Vdc (3 Wire)*	24Vdc/24Vac

Output signal is independent of power supply changes
Reverse Wiring Protected
Zero and Span Adjustment:
Externally accessible
Zero: ±5% Span
Span: ±5% Span

PHYSICAL SPECIFICATIONS

Pressure Connections:
¼″ brass barbed fittings
⅛ NPT Female brass
Electrical Connection: Euro style pluggable terminal block accepts 12-26 gauge wire

Environmental Rating: NEMA Type 1 Fire-retardant ABS (meets UL 94-5VA)
LED visual indicator standard
Weight: Approx. 2.5 oz
Media: Clean, dry and non-corrosive gas
Mounting: Threaded fastener and 35mm DIN rail mount standard
Option: ½″ plenum/conduit mounting bracket and cover kit (order part #101A213-01)
XRH: (9 point NIST Calibration Certification)

HOW TO ORDER THIS CXLdp TRANSDUCER/TRANSMITTER:

Select:

C X

1. **Type Configuration (CXLdp)**
2. **Accuracy/TC**
   (8) 0.8%, ±0.03%/°F
   (4) 0.4%, ±0.03%/°F
3. **Pressure Connection**
   (MB2) ¼ Barbed Male **(MB1)** Board only (Consult factory)
   (FO1) ⅛ NPT Female
4. **Output Signal**
   (10) 0-10Vdc* **(42)** 4-20mA
5. **Pressure Range**
   Diff. or Gauge: (P1IW) 0.10″W.C. **(P25IW)** 0.25″W.C. **(P5IW)** 0.50″W.C. **(P75IW)** 0.75″W.C. **(1IW)** 1.00″W.C. **(2IW)** 2.00″W.C. **(2P5IW)** 2.50″W.C. **(3IW)** 3.00″W.C. **(5IW)** 5.00″W.C. **(10IW)** 10.00″W.C. **(15IW)** 15.00″W.C. **(25IW)** 25.00″W.C.
   Compound: (P1IWL) ±0.10″W.C. **(P25IWL)** ±0.25″W.C. **(P5IWL)** ±0.5″W.C. **(1IWL)** ±1.0″W.C. **(2IWL)** ±2.0″W.C. **(5IWL)** ±5.00″W.C. **(10IWL)** ±10.00″W.C. **(15IWL)** ±15.00″W.C.

*User selectable 0-5Vdc output

Consult factory for guidance in product selection
Phone (203) 378-8281 or visit our
web site at www.ashcroft.com

ASHCROFT®

DXLdp Low Pressure Differential Transducer/Transmitter

APPLICATIONS:

High reliability HVAC, bio-pharm, bio-tech, room pressurization and control, velocity pressure

BENEFITS AND FEATURES:

- ***The exclusive patented Ashcroft® Spool-Cal™ actuator provides in-place system calibration without disturbing process tubes***
- ***Front access test jacks provide on-line signal reference without removing wiring***
- ***LED range status indicators for instant troubleshooting information***
- ***DIN Rail Mount – dramatically reduces installation and calibration costs***
- ***2:1 range turndown options***
- ***CE standard with all outputs***
- ***On-board voltage regulation allows use of lower cost, unregulated power supply***

The Ashcroft® DXLdp is a variable capacitance sensor within a glass-clad silicon chip. The patented Si-Glas™ technology combines the inherent high sensitivity of a variable capacitance transducer with the repeatability of a micro-machined, ultra-thin silicon diaphragm.

The Ashcroft Si-Glas sensor enables precise measurement and control of very low pressure. Although the ultra-thin silicon diaphragm deflects only a micron, the sensor is 100 times more sensitive to pressure than available silicon piezo-resistive pressure sensors.

The Si-Glas sensor is composed of only sputtered metals and glass molecularly bonded to silicon. There are no epoxies or other organics in the sensor to contribute to drift or mechanical degradation over time. The glass-clad silicon diaphragm withstands extreme overpressure as well as severe shock and vibration.

PERFORMANCE SPECIFICATIONS

Reference Temperature: 70°F ±2°F (21°C ±1°C)
Accuracy Class (Span): 0.25% 0.5% 1.0%

Non-linearity			
Best fit straight line (BFSL)	±0.15%	±0.3%	±0.6%
Hysteresis	±0.02%	±0.02%	±0.05%
Non-repeatability	±0.03%	±0.05%	±0.10%

Stability – Max. Change (Span/year): ±0.25%
Standard Ranges (Inches W.C.)
Unidirectional Ranges:

Differential or Gauge			
0/0.1	0/1.0	0/3.0	0/20.0
0/0.25	0/1.5	0/5.0	0/25.0
0/0.5	0/2.0	0/10.0	0/50.0
0/0.75	0/2.5	0/15.0	0/100.0

Bidirectional Ranges:

Compound				
±0.05	±0.5	±2.0	±5.0	
±0.1	±0.75	±2.5	±10.0	±50.0
±0.25	±1.0	±3.0	±25.0	±100.0

Custom Ranges: Special range calibration, (XCL) – Consult factory

Standard Response Time: 250m sec
(Consult factory for optional damping times)

ENVIRONMENTAL SPECIFICATIONS

Temperature Limits:
Storage: –40 to 180°F
Operating: –20 to 160°F
(10-95% R.H. noncondensing)
Compensated Range: +35 to 135°F

Thermal Coefficients:
ZERO ±0.02% Span/°F
SPAN ±0.02% Span/°F

FUNCTIONAL SPECIFICATIONS

Overpressure Limits:
Proof 15 psid
Burst 25 psid
Max. Static Line Pressure: 25 psi

Mounting Position Effect:
0.5˝W.C. and higher 0.1% Span/g
Below 0.5˝W.C. 0.25% Span/g.

Note: Mounting Position Effect easily corrected with zero potentiometer.
Approvals/Certifications: CE

ELECTRICAL SPECIFICATIONS

Output Signal:	**Power:**
4-20mA (2 wire)	12-36 Vdc
1-5 Vdc	12-36 Vdc
1-6 Vdc	12-36 Vdc
0-5 Vdc	12-36 Vdc
0-10 Vdc	12-36 Vdc

Output signal is independent of power supply changes:
12-36 Vdc range without effect on output signal
Reverse Wiring Protected
Zero and Span Potentiometers:
Front accessible, non-interactive
Zero: ±5% Span Span: ±3% Span
Supply Current: < 10mA for voltage
Warm-up Time: 5 sec. max. to meet stated specifications from initial power-up

PHYSICAL SPECIFICATIONS

Pressure Conn.: ⅛ NPT Female; ¼ Barbed Male
Weight: 4.5 oz.
Environmental Rating: NEMA 1 Case
MATERIALS:
Enclosure: Glass-filled polycarbonate (UL94-V-1)
Media: Clean, dry and non-corrosive gas (consult factory for use on other media).
NOT FOR USE ON LIQUIDS
Mounting: DIN rail types EN50022, 35 & 45

OPTIONS

- **Option XDL:** LED for quick process diagnostics:
  Zero Pressure.....Center Amber LED
  In Range ± .....Adjacent Green LED's
  Out of Range ± .....Adjacent Red LED's
  Includes: front access test jacks for on-line data access without disturbing wiring
- **Option XNL:** Front access jacks without LED's
- **Option XPV:** SpoolCal™ process valve actuator provides in-place system calibration without disturbing process tubes. From Off position the removable SpoolCal™ actuator tool provides the following functions:
  - A 90 degree clockwise rotation puts the DXLdp in the CAL mode isolating it from the process and allowing direct external pressure input
  - A 90 degree counter clockwise rotation puts the DXLdp in the MONITOR mode to tee the process pressure to the DXLdp sensor and out, providing external measurement or recording capabilities. Includes SpoolCal™ actuator tool with 7˝ silicon tubing (as shown in front photo). (Refer to Ashcroft® ATE series calibrator for data collection and instrumentation)
- **Option X21:** 2:1 turn down, 0.25% accuracy is maintained on initialized range
- **Option XCL:** Special range calibration
- **Option XX1:** Fast response (10msec)
- **Option XX2:** Slow response (1sec)

HOW TO ORDER THIS DXLdp TRANSDUCER/TRANSMITTER:

Select: DX _ F01 _ _ ST _ _ _ _ _ _ X _ _

1. **Type Configuration (DXLdp)**
2. **Accuracy/TC**
   (3) 0.25%, ±0.02%/°F **(5)** 0.50%, ±0.02%/°F
3. **Pressure Connection**
   (F01) ⅛ NPT Female **(MB2)** ¼ Barbed Male
4. **Output Signal**
   (05) 0/5 Vdc **(10)** 0/10 Vdc **(15)** 1/5 Vdc **(16)** 1/6 Vdc **(42)** 4-20mA
5. **Output Connection**
   (ST) Screw Terminal
6. **Pressure Range**
   Diff. or Gauge: (P1IW) 0.10˝W.C. **(P25IW)** 0.25˝W.C. **(P5IW)** 0.50˝W.C. **(P75IW)** 0.75˝W.C. **(1IW)** 1.00˝W.C. **(1P5IW)** 1.5˝W.C. **(2IW)** 2.00˝W.C. **(2P5IW)** 2.50˝W.C. **(3IW)** 3.00˝W.C. **(5IW)** 5.00˝W.C. **(10IW)** 10.00˝W.C. **(25IW)** 25.00˝W.C. **(50IW)** 50.00˝W.C.
   Compound: (P05WL) ±0.05˝W.C. **(P1WL)** ±0.10˝W.C. **(P25IWL)** ±0.25˝W.C. **(P5IWL)** ±0.5˝W.C. **(P75IWL)** ±0.75˝W.C. **(1IWL)** ±1.0˝W.C. **(2IWL)** ±2.0˝W.C. **(2P5IWL)** ±2.5˝W.C. **(5IWL)** ±5.00˝W.C. **(10IWL)** ±10.00˝W.C. **(25IWL)** ±25.00˝W.C.
7. **Optional Variation**
   (XDL) LED **(XPV)** SpoolCal™ Process Valve Actuator **(X21)** 2:1 Turn Down **(XNL)** Test Jacks **(XCL)** Special Range Calibration **(XX1)** Fast Response (10msec) **(XX2)** Slow Response (1sec)

Consult factory for guidance in product selection
Phone (203) 378-8281 or visit our
web site at www.ashcroft.com

ASHCROFT®

RXLdp Differential Pressure Transmitter

APPLICATIONS:
HVAC, fume hood control, lab/clean room pressurization, laminar flow, leak detection, medical, fan tracking, glovebox and velocity measurements

FEATURES:
- ***0.1˝-50˝-H_2O pressure ranges***
- ***CE approval***
- ***High overpressure protection***
- ***Stainless steel & Lexan NEMA 1 construction***
- ***Five types of output signals available***
- ***Mounts inside standard 3½˝ electrical box***
- ***Board level OEM versions available***
- ***On-board voltage regulation allows use of lower cost unregulated power supply***

The Ashcroft® RXLdp transmitter introduces a variable-capacitance sensor using a glass-clad silicon chip. The patented Si-Glas™ technology combines the inherent high sensitivity of a variable capacitance transducer with the repeatability of a micro-machined, ultra-thin single crystal silicon diaphragm.

The Ashcroft Si-Glas sensor enables precise measurement and control of very low pressure. Although the ultra-thin silicon diaphragm deflects only a micron, the sensor is 100 times more sensitive to pressure than available silicon piezo-resistive pressure sensors.

The Si-Glas sensor is composed of sputtered metals and glass molecularly bonded to silicon.

There are no epoxies or other organics in the sensor to contribute to drift or mechanical degradation over time.

PERFORMANCE SPECIFICATIONS

Reference Temperature: 70°F ±2°F (21°C ±1°C)
Accuracy Class (Span): 1%

Non-linearity	
Best fit straight line (BFSL)	±0.6%
Hysteresis	±0.05%
Non-repeatability	±0.10%

Stability – Max. Change (Span/year): ±0.5 %
Standard Ranges (Inches W.C.)
Unidirectional Ranges:
Differential or Gauge

0/0.1	0/1.0	0/3.0	0/50.0
0/0.25	0/1.5	0/5.0	
0/0.5	0/2.0	0/10.0	
0/0.75	0/2.5	0/25.0	

Bidirectional Ranges:
Compound

±0.05	±0.5	±5.0	±50.0
±0.1	±1.0	±10.0	
±0.25	±2.5	±25.0	

Custom Ranges: Special range calibration, (XCL) – Consult factory
Response Time Standard: 250ms (factory set) (Consult factory for damping options)

ENVIRONMENTAL SPECIFICATIONS

Temperature Limits:

Storage:	–40 to 180°F
Operating:	0 to 160°F
(10-95% R.H. noncondensing)	
Compensated Range:	40 to 125°F

Thermal Coefficients:

ZERO	±0.025% Span/°F
SPAN	±0.025% Span/°F

Vibration Sweep:
Less than ±0.05% Span temporary effect with 5 g's 0-60Hz

EMC: CE model compliant to EN61326: 1997 Annex A. Harmonized heavy industrial transmitter specification

FUNCTIONAL SPECIFICATIONS

Overpressure Limits:

Proof	15 psid
Burst	25 psid
Max. Static Line Pressure:	25 psi

Mounting Position Effect:

0.5˝W.C. and higher	0.1% Span/g
Below 0.5˝W.C.	0.25% Span/g

Note: Calibrated horizontally standard, unless otherwise specified. Mounting Position Effect easily corrected with zero potentiometer.
Approvals/Certifications: CE (4-20mA output with XCE option)

ELECTRICAL SPECIFICATIONS

Output Signal:	Power:
4-20mA* (2 wire)	12-36 Vdc
1-5 Vdc	12-36 Vdc
1-6 Vdc	12-36 Vdc
0-5 Vdc	12-36 Vdc
0-10 Vdc	12-36 Vdc

*Optional CE versions available
Output signal is independent of power supply changes:
12-36 Vdc range without effect on output signal
Reverse Wiring Protected
Zero Span Potentiometers: Externally accessible; non-interactive

ZERO	±5% Span
SPAN	±3% Span

Supply Current: <6mA for voltage output

Warm-up Time:
Five seconds max. to meet stated specifications

PHYSICAL SPECIFICATIONS

Pressure Connections:
SS ⅛ NPF, ¼˝ and ⅛˝ barbed connection
Electrical Connections: Terminal strip
Weight: 4.5 oz.
Environmental Rating: NEMA 1 Case
MATERIALS:
Case/Cap: SS/Lexan
Media: Clean, dry and noncorrosive gas (consult factory for use on other media)
NOT FOR USE ON LIQUIDS

OPTIONS

- (XRK) Back plate adapter
- (XRH) Calibration report
- (XCL) Custom calibration
- (XCE) CE compliant 4-20mA only

NOTES:
- Consult factory on other pressure range, temperature compensation, packaging variations or response times available

TO ORDER THIS TYPE RXLdp TRANSDUCER/TRANSMITTER:

R	X	7					S	T								

Select:
1. **Type Configuration (RXLdp)**
2. **Accuracy/TC**
   (7) 1.0%, ±0.025%/°F
3. **Pressure Connection**
   (MB2) ¼ Barbed **(MB1)** No Case OEM Option **(MB8)** ⅛ Barbed **(FO1)** ⅛ FNPT
4. **Output Signal**
   (05) 0/5 Vdc **(10)** 0/10 Vdc **(15)** 1/5 Vdc **(16)** 1/6 Vdc **(42)** 4-20mA
5. **Output Connection**
   (ST) Screw Terminal
6. **Pressure Range**
   Diff. or Gauge: (P1IW) 0.10˝W.C. **(P25IW)** 0.25˝W.C. **(P5IW)** 0.50˝W.C. **(P75IW)** 0.75˝W.C. **(1IW)** 1.00˝W.C. **(1P5IW)** 1.5˝W.C. **(2IW)** 2.00˝W.C. **(2P5IW)** 2.50˝W.C. **(3IW)** 3.00˝W.C. **(5IW)** 5.00˝W.C. **(10IW)** 10.00˝W.C. **(25IW)** 25.00˝W.C. **(50IW)** 50.00˝W.C.
   Compound: (P05IWL) ±0.5˝W.C. **(P1IWL)** 0.10˝W.C. **(P25IWL)** ±0.25˝W.C. **(P5IWL)** ±0.50˝W.C. **(1IWL)** ±1.00˝W.C. **(2P5IWL)** ±2.50˝W.C. **(5IWL)** ±5.00˝W.C. **(10IWL)** ±10.00˝W.C. **(25IWL)** ±25.00˝W.C.
7. **Optional X-Variation**
   (XRK) Back Plate Adapter **(XRH)** 9pt. Calibration Report **(XZE)** CE Approval Option (4–20mA output)

Consult factory for guidance in product selection
Phone (203) 378-8281 or visit our web site at www.ashcroft.com

ASHCROFT®

Type XLdp – Ultra-Low Variable Capacitance Pressure Transducer/Transmitter

APPLICATIONS:

HVAC, fume hood control, lab/clean/ hospital room pressurization, medical lung function or breathing equipment, fan tracking, filter monitoring, or very low velocity measurements

FEATURES:

- ***Certified 0.25% and 0.5% accuracy***
- ***0.1˝-50˝-H_2O pressure ranges***
- ***CE approved***
- ***High overpressure protection***
- ***NEMA 2 stainless steel construction***
- ***Three output signals available***
- ***Easy installation***
- ***On-board voltage regulation allows use of lower cost, non-precise, unregulated power supply***
- ***9 point NIST Traceable Calibration Certificate***

The Ashcroft® XLdp is a variable capacitance sensor within a glass- clad silicon chip. The patented Si-Glas™ technology combines the inherent high sensitivity of a variable capacitance transducer with the repeatability of a micro-machined, ultra-thin silicon diaphragm.

The Ashcroft Si-Glas sensor enables precise measurement and control of very low pressure. Although the ultra-thin silicon dia-phragm deflects only a micron, the sensor is 100 times more sensitive to pressure than available silicon piezo-resistive pressure sensors.

The Si-Glas sensor is composed of only sputtered metals and glass molecularly bonded to silicon. There are no epoxies or other organics in the sensor to contribute to drift or mechanical degradation over time. The glass-clad silicon diaphragm withstands extreme overpressure as well as severe shock and vibration.

PERFORMANCE SPECIFICATIONS

Reference Temperature: 70°F ±2°F (21°C ±1°C)

Accuracy Class (Span):	**0.25%**	**0.50%**
Non-linearity		
Best fit straight line (BFSL)	±0.15%	±0.30%
Hysteresis	±0.02%	±0.02%
Non-repeatability	±0.03%	±0.05%

Stability – Max. Change (Span/year): ±0.25 %

Standard Ranges (Inches W.C.)

Unidirectional Ranges:

Differential or Gauge

0/0.1	0/1.0	0/3.0	0/25.0
0/0.25	0/1.5	0/5.0	0/50.0
0/0.5	0/2.0	0/10.0	0/100.0
0/0.75	0/2.5	0/15.0	

Bidirectional Ranges:

Compound

±0.05	±1.0	±5.0	±100.0
±0.1	±2.0	±10.0	
±0.25	±2.5	±25.0	
±0.5	±3.0	±50.0	

Custom Ranges: Special range calibrations (XCL) – consult factory

Standard Response Time: 250msec (Consult factory for damping options)

ENVIRONMENTAL SPECIFICATIONS

Temperature Limits:

Storage:	–40 to 180°F
Operating:	–20 to 160°F
(10-95% R.H. non-condensing)	
Compensated Range:	+35 to 135°F

Thermal Coefficients:

ZERO	±0.015% Span/°F
SPAN	±0.015% Span/°F

Vibration Sweep: Less than 0.05% Span temporary effect with 5 g's 0-60 Hz

EMC: CE model compliant to EN61326: 1997 Annex A. Harmonized heavy industrial transmitter specification

FUNCTIONAL SPECIFICATIONS

Overpressure Limits:

Proof	15 psid
Burst	25 psid
Max. static line pressure	25 psi

Mounting Position Effect:

0.5˝ W.C. and higher	± 0.10% Span/g
0.25˝ W.C.	± 0.25% Span/g
0.1˝ W.C.	± 0.50% Span/g

Note: Calibrated horizontally standard unless otherwise specified. Mounting Position Effect easily corrected with zero potentiometer.

Approvals/Certifications: CE (4-20mA output wihen XCE is specified)

ELECTRICAL SPECIFICATIONS

Output Signal:	**Power:**
4-20mA (2 wire)*	12-36 Vdc
1-5 Vdc (3 wire)	12-36 Vdc
1-6 Vdc (3 wire)	12-36 Vdc

*Optional CE version

Output Signal is Independent of Power Supply Changes: 12-36 Vdc range without effect on output signal

Reverse Wiring Protected

Zero and Span Potentiometers: Externally accessible, non-interactive, ±10% Span adjustment

Supply Current: <6mA for voltage output

Warm-up Time: 5 seconds max. to meet stated specifications

PHYSICAL SPECIFICATIONS

Pressure Connections: 1/4˝ barbed stainless steel
1/8˝ barbed stainless steel (optional)
1/4 NPT female stainless steel (optional)

Electrical Connections: Teminal strip

Weight: 14 oz.

Environmental Rating: NEMA 2 Case

MATERIALS:

Case: 300 series stainless steel

Media: Clean, dry, non-corrosive gas (consult factory for use on other media)
DO NOT USE ON LIQUIDS

NOTES:

- Consult factory for use with media other than air or nonconducting gases
- Ca libration curve (0.25%) or data (0.50%) supplied with each transmitter
- Cons ult factory on other pressure range, temperature compensation or packaging variations

OPTIONS

- (XCL) Cus tom calibration
- (XCE) CE c ompliant 4-20mA only
- (XV9) Ca librated vertically
- (XX1) – F ast response time 5 msec.
- (XX2) – Sl ow response time 1 sec.

NOTES:

- Consult factory for additional options including pressure ranges, temperature compensation, packaging variations and signal response time.

TO ORDER THIS TYPE XLdp TRANSDUCER/TRANSMITTER:

X	L							S	T								

Select:

1. **Type Configuration (XLdp)**
2. **Accuracy % Span**
   (3) 0.25%, ±0.015%/°F **(5)** 0.50%, ±0.015%/°F
3. **Pressure Connection**
   (FO2) 1/4 NPTF **(MB2)** 1/4 Barbed **(MB8)** 1/8 Barbed
4. **Output Signal**
   (15) 1-5 Vdc **(16)** 1-6 Vdc **(42)** 4-20mA
5. **Output Connection**
   (ST) Screw Terminal
6. **Pressure Range**
   Diff. or Gauge: (P1IW) 0.10˝W.C. **(P25IW)** 0.25˝W.C. **(P5IW)** 0.50˝W.C. **(P75IW)** 0.75˝W.C. **(1IW)** 1.00˝W.C. **(1P5IW)** 1.50˝W.C. **(2IW)** 2.00˝W.C. **(2P5IW)** 2.50˝W.C. **(3IW)** 3.00˝W.C. **(5IW)** 5.00˝W.C. **(10IW)** 10.00˝W.C. **(15IW)** 15.00˝W.C. **(25IW)** 25.00˝W.C. **(50IW)** 50.00˝W.C.
   Compound: (PO5IWL) ±0.05˝W.C. **(P1IWL)** ±0.10˝W.C. **(P25IWL)** ±0.25˝W.C. **(P5IWL)** ±0.50˝W.C. **(1IWL)** ±1.00˝W.C. **(2PIWL)** ±2.00˝W.C. **(2P5IWL)** ±2.50˝W.C. **(3IWL)** ±3.00˝W.C. **(5IWL)** ±5.00˝W.C. **(10IWL)** ±10.00˝W.C. **(25IWL)** ±25.00˝W.C.
7. **Optional X-Variations** (Includes all options in noted in "Options" section above)

Consult factory for guidance in product selection
Phone (203) 378-8281 or visit our
web site at www.ashcroft.com

ASHCROFT®

Industrial IXLdp Ultra-Low Variable Capacitance Pressure Transmitter

APPLICATIONS:

HVAC, fume hood control, lab/clean room pressurization, laminar flow, furnace/ stack draft, leak detection, or pollution monitoring, medical equipment, fan tracking, filter monitoring and velocity measurements

BENEFITS & FEATURES:

- ***Certified 0.25% and 0.5% accuracy***
- ***0.1˝-200˝-H_2O pressure ranges***
- ***High overload protection***
- ***FM approved for hazardous locations***
- ***NEMA 4X metal construction***
- ***Six types of output signals available***
- ***5:1 turndown option***
- ***Variable dampening option***
- ***On-board voltage regulation allows use of lower cost, non-precise, unregulated power supply***
- ***Hazardous environments***

The Ashcroft® Industrial IXLdp was designed for the measurement and control of very low pressure and flow in industrial and process plant environments. The Industrial IXLdp transmitter features a rugged NEMA 4X enclosure, built-in electrical terminal box isolated from the electronics and threaded process connections.

The Ashcroft IXLdp transmitter utilizes a state-of-the-art variable capacitance sensor with a glass-clad silicon chip. The Si-Glas™ technology combines the inherent high sensitivity of a variable capacitance transducer with the repeatability of a micro-machined, single-crystal silicon diaphragm. The Si-Glas sensor is composed of sputtered metals and glass molecularly bonded to silicon. There are no epoxies or other organics in the sensor to contribute to drift or mechanical degradation over time.

PERFORMANCE SPECIFICATIONS

Reference Temperature: 70°F ±2°F (21°C ±1°C)

Accuracy Class (Span):	**0.25%**	**0.50%**
Non-linearity		
Terminal point	±0.20%	±0.40%
Best fit straight line (BFSL)	±0.15%	±0.30%
Hysteresis	±0.02%	±0.02%
Non-repeatability	±0.03%	±0.05%

Stability – Max. Change (Span/year): ±0.25 %

Standard Ranges (Inches W.C.)

Unidirectional Ranges:

Differential or Gauge

0/0.1	0/2.0	0/10	0/50
0/0.25	0/2.5	0/15	0/100
0/0.50	0/3.0	0/20	0/150
0/1.0	0/5.0	0/25	0/200

Bidirectional Ranges:

Compound

±0.05	±0.5	± 5.0	± 25.0
±0.10	±1.0	±10.0	± 50.0
±0.20	±2.0	±15.0	±100.0
±0.25	±2.5	±20.0	

Custom Ranges: Special range calibrations (XCL) – consult factory

Response Time: Standard: 250ms
(Consult factory for damping options)
Optional variable damping (0-30 sec) (X1D)

ENVIRONMENTAL SPECIFICATIONS

Temperature Limits:
Storage: –40 to 210°F
Operating: –20 to 185°F (0-95% relative humidity)
Compensated: 0 to 160°F

Thermal Coefficients:

	0.25% Acc.	**0.5% Acc.**
ZERO	±0.01% Span/°F	±0.02% Span/°F
SPAN	±0.01% Span/°F	±0.02% Span/°F

Vibration Sweep:
Less than 0.2% Span/g temporary effect 10-130 Hz

FUNCTIONAL SPECIFICATIONS

Overpressure Limits:
Proof: 20 psid
Burst differential pressure: 50 psid
Maximum static (line) pressure: 100 psi
Static pressure effect: less than 0.5% Span

Mounting Position Effect:

1˝W.C. and higher	0.1% Span/g
0.25˝ up to 0.5" W.C.	0.5% Span/g
0.1˝W.C.	0.8% Span/g

Note: Calibrated horizontally standard unless otherwise specified. Mounting Position Effect easily corrected with zero potentiometer.

Approvals/Certifications: FM intrinsically safe and non-incedive when XFM is specified, see options.

Output Signal:
Current: 4-20mA two wire current loop
Voltage: All voltage outputs are 3 wire

0-5 Vdc	1-6 Vdc
±5 Vdc	
1-5 Vdc	±2.5 Vdc

Output Signal is Independent of Power Supply

Changes: 12-36 Vdc range without effect on output signal

Reverse Wiring Protected

Internal Zero and Span: ±10% Span Adjustment

Supply Current: 2.6mA typical for voltage output

Warm-up Time:
Full specification: Less than one second

Fast Response, Turndown & Variable Damping Optional

PHYSICAL SPECIFICATIONS

Enclosure: 300 series stainless steel
Process Connections: Two ¼ NPT female
Environmental Rating: NEMA 4X Case
Electrical Connections: Two ½˝ female electrical conduit connections isolated from the electronics. Separate access cover for terminal connections
Media: Clean, dry and noncorrosive gas (consult factory for use on other media)
NOT FOR USE ON LIQUIDS

OPTIONS

(XX1) – Fast Response: 8 ms
(X41) – 5:1 Turndown
(X1D) – Variable damping (0-30 sec.)
(XNH) – Paper tag
(XCL) – Custom pressure range calibration
(XFM) – FM approval

- Consult factory on other pressure range, temperature compensation, packaging variations or response times

Factory Mutual intrinsically safe approvals for use in (specify XFM* option noted above):
Intrinsically Safe:
Class I, II, III: Div. 1 & 2, Groups A - G, when wired in accordance with Ashcroft dwgs 71B241 (pages 1-3)
Non-incendive:
Class I, Div. 2, Groups A - D
Class II, Div. 2, Groups F, G
Class III
*FM option (XFM) cannot be combined options X41 or X1D

TO ORDER THIS TYPE IXLdp TRANSDUCER/TRANSMITTER:

I	X		F	0	2			S	T							X	F	M

Select:

1. **Type Configuration (XLdp)**
2. **Accuracy/TC**
   (3) 0.25%, ±0.01%/°F **(5)** 0.50%, ±0.02%/°F
3. **Pressure Connection**
   (F02) ¼ NPT-Female
4. **Output Signal**
   (05) 0/5 Vdc **(15)** 1/5 Vdc **(16)** 1/6 Vdc **(25)** ±2.5 Vdc **(50)** ±5.0 Vdc **(42)** 4-20mA
5. **Electrical Terminal**
   (ST) Screw Termination
6. **Pressure Range**
   Diff. or Gauge: (P1IW) 0.10˝W.C. **(P25IW)** 0.25˝W.C. **(P5IW)** 0.50˝W.C. **(1IW)** 1.00˝W.C. **(2IW)** 2.00˝W.C. **(2P5IW)** 2.50˝W.C. **(3IW)** 3.00˝W.C. **(5IW)** 5.00˝W.C. **(10IW)** 10.00˝W.C. **(15IW)** 15.00˝W.C. **(20IW)** 20.00˝W.C. **(25IW)** 25.00˝W.C. **(50IW)** 50.00˝W.C. **(100IW)** 100.00˝W.C. **(150IW)** 150.00˝W.C. **(200IW)** 200.00˝W.C.

   Compound: (P05IWL) ±0.05˝W.C. **(P1IWL)** ±0.10˝W.C. **(P2IWL)** ±0.20˝W.C. **(P25IWL)** ±0.25˝W.C. **(P5IWL)** ±0.5˝W.C. **(1IWL)** ±1.00˝W.C. **(2IWL)** ±2.00˝W.C. **(2P5IWL)** ±2.50˝W.C. **(3IWL)** ±3.00˝W.C. **(5IWL)** ±5.00˝W.C. **(10IWL)** ±10.0˝W.C. **(15IWL)** ±15.00˝W.C. **(20IWL)** ±20.00˝W.C. **(25IWL)** ±25.00˝W.C. **(50IWL)** ±50.00˝W.C. **(100IWL)** ±100.00˝W.C.
7. **Optional X-Variation (XFM)** FM Approval Option (Includes all options in list)

Consult factory for guidance in product selection
Phone (203) 378-8281 or visit our
web site at www.ashcroft.com

ASHCROFT®

Duratran® Transmitter Type 2279, ASME B 40.1 Grade 2A (±0.5% of span)

Duratran® Transmitter/Gauge, takes the place of an electronic transmitter and a mechanical gauge

- ***4-20mA, 2 wire output***
- ***Zero and span adjustments***
- ***4½˝ solid-front phenolic case***
- ***Accuracy: ±0.5% Span including linearity, hysteresis and repeatability***

Duratran®PLUS! Option:

- ***Liquid-filled performance in a dry gauge***
- ***Minimizes vibration and pulsation wear without liquid-filled headaches***
- ***Order as option XLL***

The result is reliable, local, analog pressure indication with an economical transmitter . . . A niche solution for any facility

The Duratran® solution is a reliable Duragauge® pressure gauge fitted with optical circuitry to provide a 4-20mA output.

The 4½˝ phenolic case is hermetically sealed, chemical and heat resistant.

The wide selection of system materials and corrosion-proof housing meets a variety of demanding applications . . . even those with vibration and pulsation.

This transmitter/gauge allows you to save money, replacing two instruments with one Duratran.

TABLE A – BOURDON TUBE SELECTION

Ordering Code	Bourdon Tube and Tip Material (all joints TIG welded)	Socket Material	Pressure Range Type	(psi)	NPT Connection
S	316 stainless steel	316 stainless steel	Drawn "C" Tube	12/1500	½
			Drawn Helical Tube	2000/20,000	
P	K Monel	Monel 400	Drawn "C" Tube	12/1500	½
			Drawn Helical Tube	2000/20,000	

TABLE B – STANDARD psi RANGES

0/12	0/600
0/15	0/800
0/30	0/1000
0/60	0/1500
0/100	0/2000
0/160	0/3000
0/200	0/5000
0/300	0/10,000
0/400	0/20,000

SPECIFICATIONS

Functional Service:	Liquid, gas or vapor
Ranges:	See Table B
Output:	4-20mA, 2 wire
Power Supply:	12/40 Vdc
Zero Adjustment:	±20% of Span
Span Adjustment:	±10% of Span
Temperature Limit:	–40°F to 160°F
Overpressure Limits:	130% of range without damage to tube
Humidity Limits:	Up to 90% relative humidity noncondensing
Signal Damping:	Fixed electronic damping time constant of 0.2 seconds
Turn On Time:	Less than 1 second
Environmental Rating:	IP65

PERFORMANCE

Accuracy:	±0.5% including linearity, hysteresis, and repeatability
Stability:	±0.25% Span for 6 months
Temperature Effect:	Less than 0.02% of span/°F
Position Effect:	Vertical mounting recommended May be re-zeroed to correct error in other positions

PHYSICAL

Dial Size:	4½˝
Case:	Solid front, black phenolic hermetically sealed
Ring:	Threaded, glass-filled polypropylene
Mounting:	Stem, surface, flush (with 1278 M ring)
Pressure Connection:	½ NPT
Window:	Laminated safety glass
Calibration:	Transmitter—Span and zero adjustment on dial Gauge—Zero adjustment with micrometer pointer
Electrical Connection:	30˝ #18 wire AWG, ½ NPT liquid tight conduit connection at case
Weight:	3 lb

TO ORDER THIS TYPE 2279 DURATRAN TRANSMITTER:

Select:	4½˝	2279	(S)SH	04L	XPD	0/100 psi
1. Dial Size						
2. Case Type Number						
3. Bourdon System (ordering code)—Table A						
4. Connection: Location & Size—½ NPT (04) Lower (L)						
5. Variation (if required)						
6. Range—Table B						

Consult factory for guidance in product selection
Phone (203) 378-8281 or visit our web site at www.ashcroft.com

MADE IN U.S.A.

ASHCROFT®

Digital Panel Meter
DM61

APPLICATIONS
Tank Level Monitoring & Control / Pump and Flow Control / Remote Pressure Indication
FEATURES:

- ***Large Two Line 6-Digit Display***
- ***Field Selectable Inputs***
- ***Dual Scale Display Feature – Single Input***
- ***Programmable Display and Function Keys***
- ***User-Defined Peak / Valley (Min. / Max.) Indication***
- ***Alarm Status Indicator***
- ***On-Board Digital Input***
- ***3 Tier Password Protection***

The Ashcroft DM61 digital panel meter is ideal for fulfilling application requirements where monitoring and/or data-logging is necessary. Incorporating user-friendly functions, it allows for quick set-up and programming. Its dual-line indication offers a distinct benefit for level measurement and the large panel display supplies high accuracy and precision due to an internal 24-bit A/D converter. This model also offers Modbus communication and expansion modules, thereby making it one of the most advanced meters available.

PERFORMANCE SPECIFICATIONS

Note: Except where noted all specifications apply to operation at +25°C (+77°F).
Inputs: Field selectable: 0-20, 4-20 mA, ±10 Vdc (0-5, 1-5, 0-10 V), Modbus PV (slave)
Display: 2 lines of 6 Digits; display reads –99999 to 999999, red LEDs with leading 0 blanking
Character Height: upper line: 0.60" (15 mm) / lower line: 0.46˝ (12 mm)
Intensity (Adjustable): 8 settings
Update Rate: 200 msec
Function Key Assignment: Programmable upper & lower displays may be assigned to PV1, PV2, PCT (%), max/min, alternate max and min, setpoints, units (lower display only), and Modbus input.
Accuracy: ±0.03% of calibrated span ±1 count, square root & programmable exponent accuracy range: 10-100% of calibrated span
Programming Methods: Panel buttons, digital input, PC and DPM ProView software, Modbus registers, or cloning with Copy function.
Noise filter: Selectable from 2 to 199 (0 disables filter)
Filter Bypass: Selectable from 0.1 to 99.9% of calibrated span
Max/Min (PV) Display: Stored until reset or power cycled to the meter
Password Protection: 3-level programmable passwords for allowing / restricting user access.
LEVEL-I. Allows use of function keys and digital inputs.
LEVEL-II. Provide access to function keys, digital inputs and editing set/reset points.
LEVEL-III. Prohibits all programming, function keys and digital inputs.
Non-Volatile Memory: Programmed settings stored for 10 years (min.) in the event power is lost.

ELECTRICAL SPECIFICATIONS

Power Options: 85-265 Vac 50/60 Hz, 90-265 Vdc 20 W max or jumper selectable 12/24 Vdc ±10%, 15W (max.)
Fuse: Required external fuse: UL Recognized, 5 Amp (max.), slow blow; up to 6 meters may share one 5 Amp fuse
Isolated Transmitter Power Supply: Terminals P+ & mp; P-: 24 Vdc ±5% @ 200 mA max (standard), (12/24 VDC powered models rated @ 100 mA max); 5 or 10 Vdc @ 50 mA max, selectable with internal jumper J4.
Normal Mode Rejection: Greater than 60 dB at 50/60 Hz
Isolation: 4 kV input/output-to-power line. 500 V input-to-output or output-to-P+ supply
Overvoltage Category: Installation Overvoltage Category II: Local level with smaller transient over-voltages than Installation Overvoltage Category III.

ENVIRONMENTAL SPECIFICATIONS

Operating Temperature Range: –40/65°C (–40/149°F)
Storage Temperature Range: –40 to 85°C (–40/185°F)
Relative Humidity: 0-90% R.H. non-condensing.
Temperature Coefficients: 0.005% of calibrated span/°C max from 0/65°C (32/149°C) ambient, 0.01% of calibrated span/°C max from –40/0°C (–40/32°F) ambient

PHYSICAL SPECIFICATIONS

Front Panel: NEMA 4X, IP65
Enclosure: 1⁄8 DIN, high impact plastic, UL 94V-0, color: black
Electrical Connections: Removable screw terminal blocks accept 12 to 22 AWG wire, RJ45 for external relays, digital I/O, and serial communication adapters
Mounting: Panel (mounting brackets included)
Weight: 9.5 oz
UL File Number: UL & c-UL Listed. E160849; 508 Industrial Control Equipment

DIMENSIONS [inches]

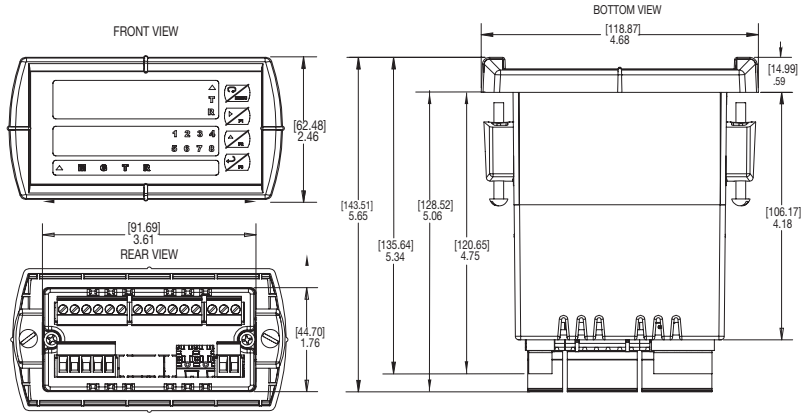

HOW TO ORDER

D	M	6	1		A		D	C

MODEL
DM61-Single Output Digital Panel Meter

OUTPUT OPTIONS
A - None
B - 4-20mA Output
C - 2 Relays
D - 2 Relays & 20mA Output
E - 4 Relays
F - 4 Relays & 20mA Output

POWER SUPPLY
AC- 85-265 Vac
DC- 12-24 Vdc

Accessory Part#	Description
101B224-01	Din Rail Mounting for Two Modules (pertains to 101B224-03,-04, -06, -07)
101B224-03	4 Relays Expansion Module
101B224-04	4 Digital Inputs & 4 Digital Outputs Module
101B224-05	Meter Copy Cable
101B224-08	DProM to USB Adapter (connects meter to PC & software)
101B224-06	RS-232 Serial Adapter
101B224-09	USB to RS-232 Non-Isolated Converter
101B224-07	RS-422/485 Serial Adapter
101B224-02	Suppressor (Snubber)

Consult factory for guidance in product selection
Phone (203) 378-8281 or visit our web site at www.ashcroft.com

MADE IN U.S.A.

ASHCROFT®

Pneumatic Transmitter,
Type 4080, ASME B 40.1 Grade 1A (±1.0% of span)
Type 4480, ASME B 40.1 Grade 2A (±0.5% of span)

Providing plus-values which will coordinate key functional areas in your plant, this Ashcroft® pneumatic transmitter serves pressure applications throughout all industries.

A positive report of process fluid and media performance is provided at designated operational check points by a signal accurately transmitted with maximum efficiency, assuring operating economies and safety.

The Ashcroft transmitter is a self-nulling motion- balance instrument, using a pneumatic relay operating on the nonbleed force balance principle for converting input pressures into proportional low air pressure signals for transmittal to remote indicators or controllers.

SPECIFICATIONS

Types	4080	4480
Ranges	see Standard Ranges	
Output ranges, psi	3-15 & 3-27 (see note below for vacuum application)	
Supply air requirements	18-20 psi for 3-15 psi range; 30-35 psi for 3-27 psi range	
Air consumption SCFM	0.1	
Speed of response	time constant of 4 seconds per 500 ft of tubing	
Air connection	¼ NPT Female	
Calibration adjustments	5	2
Accessories	see optional features and accessories	
Transmission distance	1000 ft	
Mounting weight	approximate weight 9 lb	
Accuracy ±% of span	1.0	0.5
Sensitivity ±% of span	0.1	0.001
Repeatability % of span	0.15	
Actuation	Bourdon tube	
Input sensing element material	316 SS	
Ambient temperature effect	½% per 50°F	
Process connection	½ NPT (ordering code 04L)	

Note: Vacuum application: The transmitted air pressure increases as the measured vacuum approaches zero.

STANDARD RANGES

Process Connection	Pressure			Vacuum	Compound
½ Male NPT Lower	0/8 psi* 0/10 psi* 0/15 psi 0/30 psi 0/60 psi 0/100 psi 0/160 psi	0/200 psi 0/300 psi 0/400 psi 0/600 psi 0/800 psi 0/1000 psi 0/1500 psi 0/2000 psi*	0/3000 psi 0/5000 psi 0/10,000 psi* 0/20,000 psi	10/0 in.Hg* 15/0 in.Hg* 20/0 in.Hg* 30/0 in.Hg	30 in.Hg/15 psi 30 in.Hg/30 psi 30 in.Hg/60 psi 30 in.Hg/100 psi 30 in.Hg/150 psi 30 in.Hg/200 psi 30 in.Hg/300 psi

* Applies to 4480 only.

TUBE MATERIALS

Type Number	Range Limits	Ordering Code	Bourdon Tube Material
4080 (indicating) **4480** (nonindicating)	Vacuum to 20,000 psi	S	316 stainless steel

TO ORDER THESE TYPE 4080, 4480 PNEUMATIC TRANSMITTERS:

Pressure transmitters (specify the following):

1. Type number: 4080 indicating, 4480 nonindicating
2. Bourdon Tube material. Specify material ordering code letter
3. Range or span (process pressure)
4. Output range. The standard 3-15 psi range will be supplied unless specified otherwise
5. Accessories (see page 261-266) or optional features (see page 267-268)
   Example: 4480S-04L, 3-15# Range 0/100 psi

Consult factory for guidance in product selection
Phone (203) 378-8281 or visit our
web site at www.ashcroft.com

BIMETAL THERMOMETERS

BIMETAL THERMOMETERS

Product Selection Information 209
Bimetal Thermometers EI Series 210
Bimetal Thermometers CI Series 211
Bimetal Thermometers EL Series 212
Bimetal Thermometers Case Dimensions 213
Options and Thermowells 228-229

ASHCROFT®

Product Selection Information
Bimetal Thermometers

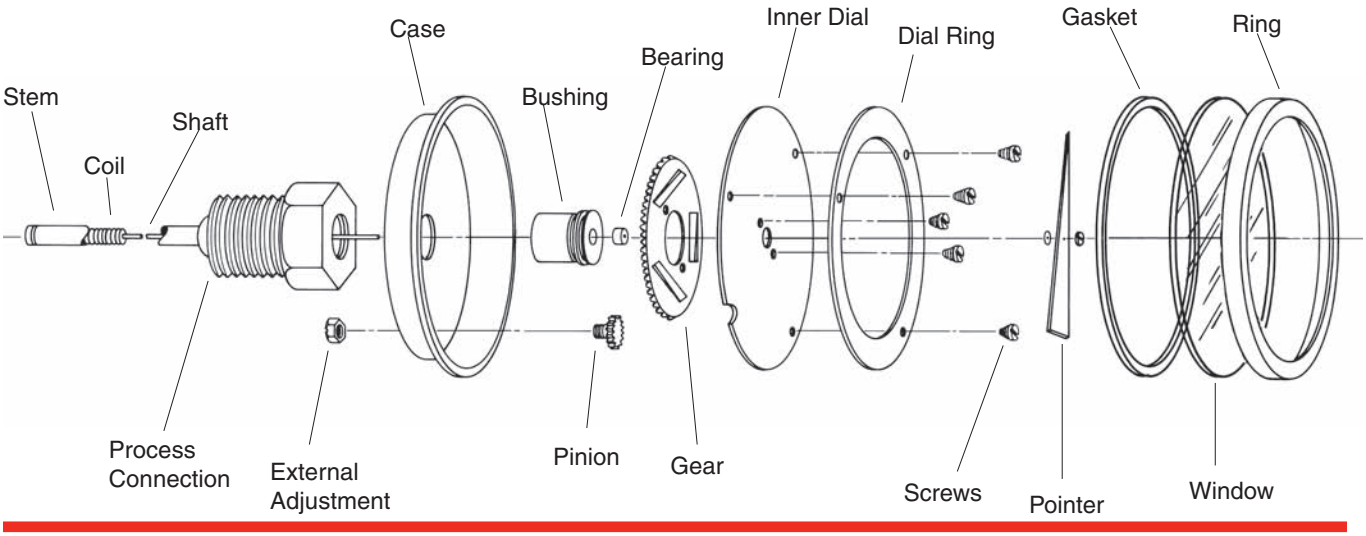

Warning: When selecting all bimetal thermometers, consider the media and the ambient operating conditions. Improper application can be detrimental to the thermometer and can cause failure and possibly personal injury or property damage. Inaccuracies resulting from improper setting of the external adjustment by the user may cause personal injury or property damage. Consult ASME B40.200 (B40.3) for guidance in selection and use of bimetal thermometers.

Temperature Ranges: Standard Fahrenheit and Celsius ranges have been established to encompass all normal temperature measurement requirements. A bimetal thermometer can be used at an operating temperature anywhere throughout its dial range. Provision should be made for extreme temperature conditions. No bimetal thermometer should be exposed continuously to process temperatures over 800°F (425°C).

Operating Conditions: The maximum ambient temperature of the case should be no more than 200°F (95°C); liquid-filled series 150°F (65°C). Temperatures beyond this value may cause discoloration of the dial or result in increased pressure inside the casing which would ultimately lead to failure of the window. The lowest ambient temperature should not exceed –40°F (–40°C).

Thermowells: Thermowells must be used on any application where the stem of the bimetal thermometer may be exposed to pressure, corrosive fluids or high velocity. Additionally, the use of a thermowell permits instrument interchange or calibration check without disturbing or closing down the process.

Pointers: The pointers are balanced to close tolerances, and the paint finishes are controlled to assure long-term stability under adverse ultraviolet conditions.

Cases: There are three case styles. The CI series has no adjustment but is hermetically sealed. The hermetic seal prevents entry of moisture into the casing, minimizing the possibility of icing or fogging inside the case. The EL series provides the same features as the EI plus the added benefit of liquid filling which prolongs instrument life. Potential wear problems caused by excessive vibration are minimized through dampening, and the liquid medium improves readability. The instruments are leak-tested to ensure the integrity of the joints. Case and stem material is 304 stainless steel.

Coils: The bimetallic coils are carefully wound and inspected. Each is heat treated for optimum stability and overtemperature capability. Each coil is silicone dampened for improved vibration resistance. Available as optional silicone free.

Bearings: The bearings are made of Teflon or other low-friction material.

Shafts: Shafts are made of specially drawn stainless steel wire with a very smooth finish.

Dials: The dials are based on computer-calculated temperature deflection data and have the Maxivision® format to minimize parallax error.

Windows: The standard window on EI and CI series are heavy-duty glass. Plastic and shatterproof glass are optional. The standard window on EL series is polycarbonate. No other options are available.

The complete line of Ashcroft® industrial bimetal thermometers and accessories provides quality choices for your temperature applications. There is a long history of superior quality in engineering, manufacturing and customer service of these products. Each Ashcroft industrial bimetal thermometer is backed by a limited five year warranty.

Each instrument is manufactured to a standard accuracy of 1% of span (ASME B40.3, Grade A) traceable to the National Institute of Standards and Technology (NIST). The bimetal coils are heat treated for stability and overtemperature capability. A single helix is used to reduce lag time. The bearings are made of a low-friction long-life material. The shafts are made of specially drawn stainless steel with a very smooth finish. All joints are welded, and the weld between the stem and the outlet is located at the bottom of the threads to eliminate the possibility of crevice corrosion.

Silicone dampening is included for improved vibration resistance. The Ashcroft Maxivision® dial eliminates parallax error by placing the pointer in the same plane as the graduations. The dial can be rotated 360 degrees and can be angled 180 degrees with the Everyangle™ connection.

Everyangle – Case Connection: The Ashcroft Everyangle™ industrial bimetal thermometer dial face with Maxivision dial can be rotated 360 degrees and angled 180 degrees. It is available in the EI and EL (5″ only in EL) series with either a threaded or compression type union connection.

This design provides maximum utility. Since the entire case can be rotated and angled, the instrument can be installed almost anywhere and adjusted so that the dial face can be easily read.

ASHCROFT®

Bimetal Thermometers
Series EI, ASME B40.200 (B40.3)
Grade A (±1% of span)

- ***Hermetically sealed***
- ***External adjustment***
- ***Maxivision® dial***
- ***±1% full-span accuracy (ASME B40.3 Grade A)***
- ***All-welded stainless steel construction***
- ***Silicone on the coil provides vibration dampening and superior time response***
- ***Heavy-duty glass standard; plastic or shatterproof glass optional***
- ***Limited five-year warranty***

This series has a hermetic seal and an external adjustment in the rear of the case. As with other Ashcroft® industrial bimetal thermometers, it has a Maxivision® dial which eliminates parallax by placing the pointer on the same plane as the graduations. The connection locations are rear, lower, and Everyangle™.

The hermetic seal prevents entry of moisture into the casing, thus minimizing the possibility of icing or fogging inside the case. The window stays clear, and with the Maxivision dial, precise readings are certain.

IN A RUSH? ASK FOR ASHCROFT GOLD SERVICE

SELECTION TABLE

Case Size		Style Code	Stem				Stem Lengths Available		TemperatureRange					
Dial	Code		Connection	Code	Location	Code	"S" Length (inches)	Code	°F* Fahrenheit	°/Div.	Fig. Inter.	°C Celsius	°/Div.	Fig. Inter.
2″	20	EI	Plain	40	Rear	R			–80/120	2	20	–50/50	1	10
			Pointed Plain	50	Rear	R	2½	025	–20/120††			–20/120	2	20
			¼ NPT	60	Rear	R	4	040	30/130††	1	10	0/50††	1	5
3″	30		½ NPT Union	42	Everyangle	E	6	060	0/200	2	20	0/100	1	10
			½ NPT	60			9	090	0/250		50	10/150	2	20
			½ NPT	60	Rear	R	12	120	50/300			0/200		
					Lower	L	15	150	50/400	5		0/300††	5	50
5″	50		½ NPT Union	42	Everyangle	E	18	180	50/550			50/450**†		
			½ NPT	60			24	240	200/700†			100/500**†		
			½ NPT	60	Rear	R			100/800†	10	100			
					Lower	L			200/1000**†					

*Dual scale ranges available for all standard °F ranges (3″ and 5″ case only)

**Satisfactory for continuous service up to 800°F or 425°C. Can be used for intermittent service from 800 to 1000°F, or 425 to 500°C.
Use Ashcroft Duratemp® thermometers for ranges above and below those listed above.

†Minimum stem length for these ranges is 4″.

††Minimum stem length for lower connection and Everyangle is 4″.

Thermowells must be used on all pressure or velocity applications, to protect the stem of thermometer from corrosion and physical damage, and to facilitate removal of the thermometer without disturbing the process. Maximum ambient temperature is 200°F (95°C).

Overtemperature Limits	
Top of Range °F	Maximum Overtemperature
up to 250	100% of span
300/550	50% of span
600/1000	800°F **

TO ORDER THIS EI SERIES BIMETAL THERMOMETER:

Select: 30 EI 60 R 040 0/250°F XNH

1. Case Size: 3″ Code 30
2. Style: Code EI
3. Stem Conn: ½ NPT Code 60
4. Stem Location: Rear Code R
5. Stem Length: 4″ Code 040
6. Range: Code 0/250°F
7. Options: Stainless Steel Tag (see Page 228)

Consult factory for guidance in product selection
Phone (203) 378-8281 or visit our
web site at www.ashcroft.com

MADE IN U.S.A.

ASHCROFT®

Bimetal Thermometers
Series CI, ASME B40.200 (B40.3)
Grade A (±1% of span)

- ***Hermetically sealed***
- ***Tamper resistant***
- ***Maxivision® dial***
- ***±1% full-span accuracy (ASME B40.3 Grade A)***
- ***All-welded stainless steel construction***
- ***Silicone on the coil provides vibration dampening and superior time response***
- ***Heavy-duty glass standard; plastic or shatterproof glass optional***
- ***Limited five-year warranty***

This series is tamper proof, hermetically sealed and has the Maxivision® dial. The connection locations are rear and lower. The CI series of Ashcroft® industrial bimetal thermometers was designed for applications where external adjustment or pointer reset are not desired.

The hermetic seal prevents entry of moisture into the casing, thus minimizing the possibility of fogging inside the case. The Maxivision dial provides accurate temperature readings.

IN A RUSH? ASK FOR ASHCROFT GOLD SERVICE

SELECTION TABLE

Case Size		Style Code	Stem				Stem Lengths Available		TemperatureRange					
Dial	Code		Connection	Code	Location	Code	"S" Length (inches)	Code	°F* Fahrenheit	°/Div.	Fig. Inter.	°C Celsius	°/Div.	Fig. Inter.
2″	20	CI	Plain	40	Rear	R	2½	025	–80/120	2	20	–50/50	1	10
			Pointed Plain	50	Rear	R			–20/120††			–20/120	2	20
			¼ NPT	60	Rear	R	4	040	30/130††	1	10	0/50††	1	5
3″	30		½ NPT	60	Rear	R	6	060	0/200	2	20	0/100	1	10
					Lower	L	9	090	0/250		50	10/150	2	20
5″	50		½ NPT	60	Rear	R	12	120	50/300			0/200		
							15	150	50/400	5		0/300††	5	50
							18	180	50/550			50/450**†		
					Lower	L	24	240	200/700†			100/500**†		
									100/800†	10	100			
									200/1000**†					

*Dual scale ranges available for all standard °F ranges (3″ and 5″ case only)
**Satisfactory for continuous service up to 800°F or 425°C. Can be used for intermittent service from 800 to 1000°F, or 425 to 500°C.
Use Ashcroft Duratemp® thermometers for ranges above and below those listed above.
†Minimum stem length for these ranges is 4″.
††Minimum stem length for lower connection is 4″.

Thermowells must be used on all pressure or velocity applications, to protect the stem of thermometer from corrosion and physical damage, and to facilitate removal of the thermometer without disturbing the process.
Maximum ambient temperature is 200°F (95°C).

Overtemperature Limits	
Top of Range °F	Maximum Overtemperature
up to 250	100% of span
300/550	50% of span
600/1000	800°F **

TO ORDER THIS CI SERIES BIMETAL THERMOMETER:

Select: 30 CI 60 R 040 0/250°F XNH

1. Case Size: 3″ Code 30
2. Style: Code CI
3. Stem Conn: ½ NPT Code 60
4. Stem Location: Rear Code R
5. Stem Length: 4″ Code 040
6. Range: Code 0/250°F
7. Options: Stainless Steel Tag (see Page 228)

Consult factory for guidance in product selection
Phone (203) 378-8281 or visit our
web site at www.ashcroft.com

MADE IN U.S.A.

ASHCROFT®

Bimetal Thermometer
Series EL, ASME B40.200 (B40.3)
Grade A (±1% of span)

- ***Silicone liquid filled***
- ***External adjustment***
- ***Durable polycarbonate window***
- ***Maxivision® dial***
- ***±1% full-span accuracy (ASME B40.3 Grade A)***
- ***All-welded stainless steel construction***
- ***Limited five-year warranty***

This series – liquid filled – is available in 3″ rear, 5″ rear and 5″ Everyangle™ connections. The external adjustment is standard.

The Ashcroft® liquid-filled thermometer provides the same features as the EI style with the added benefit of liquid filling.

The potential wear problem caused by excessive vibration is minimized through dampening and the instrument life is prolonged. The liquid medium also improves readability.

IN A RUSH? ASK FOR ASHCROFT GOLD SERVICE

SELECTION TABLE

Case Size		Style Code	Stem				Stem Lengths Available		TemperatureRange					
Dial	Code		Connection	Code	Location	Code	"S" Length (inches)	Code	°F* Fahrenheit	°/Div.	Fig. Inter.	°C Celsius	°/Div.	Fig. Inter.
3″	30	EL	½ NPT	60	Rear	R	2½	025	–40/160	2	20	–20/120	2	20
							4	040	–20/120†	2	20	–10/110	2	10
							6	060	30/130†	1	10			
5″	50		½ NPT Union	42	Everyangle	E	9	090	0/200	2	20	0/50†	1	5
							12	120	0/250	2	50	0/100	1	10
			½ NPT	60			15	150	50/300	2	50	10/150	2	20
							18	180	50/550	5	50	0/300†	5	50
			½ NPT	60	Rear	R	24	240						

*Dual scale ranges available for all standard °F ranges.
†Minimum stem length for Everyangle connection is 4″.
•Use Ashcroft Duratemp® thermometers for ranges above and below those listed above.

•Thermowells must be used on all pressure or velocity applications, to protect the stem of thermometer from corrosion and physical damage, and to facilitate removal of the thermometer without disturbing the process. Maximum ambient temperature is 150°F (65°C).

Overtemperature Limits	
Top of Range °F	Maximum Overtemperature
up to 160	100% of span
180/300	300°F
350/550	550°F

TO ORDER THIS EL SERIES BIMETAL THERMOMETER:

Select: **30** **EL** **60** **R** **040** **0/250°F** **XNH**

1. Case Size: 3″ Code 30
2. Style: Code EL
3. Stem Conn: ½ NPT Code 60
4. Stem Location: Rear Code R
5. Stem Length: 4″ Code 040
6. Range: Code 0/250°F
7. Options: Stainless Steel Tag (see Page 228)

Consult factory for guidance in product selection
Phone (203) 378-8281 or visit our
web site at www.ashcroft.com

MADE IN U.S.A.

ASHCROFT®

Case Dimensions

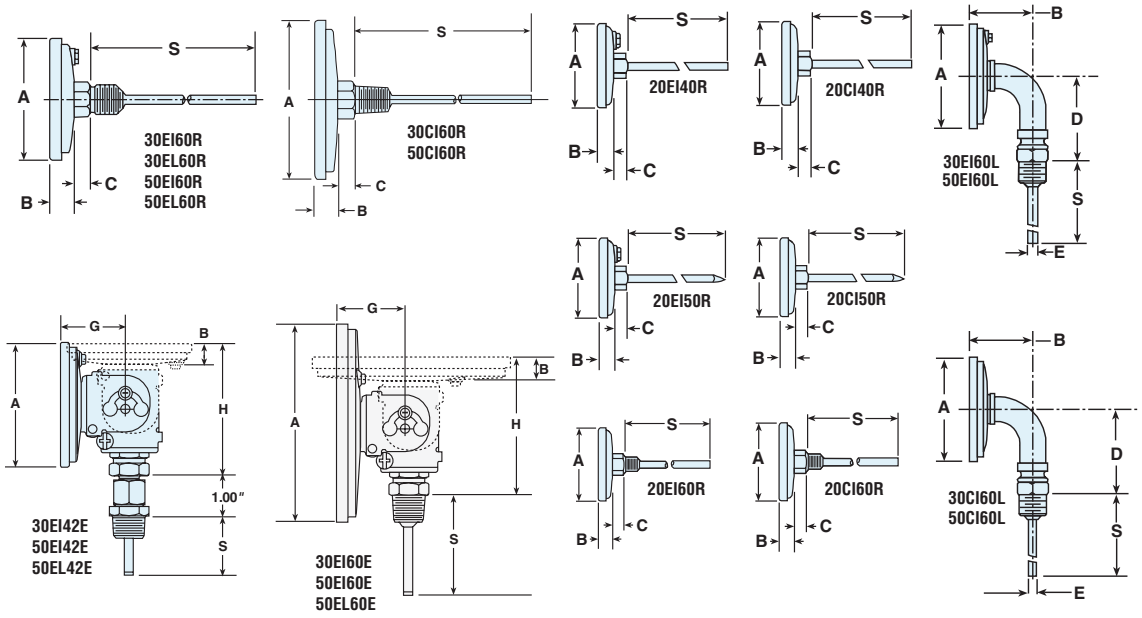

Case Series	Dial Size	Connection Location	A	B	C	D	E	G	H	S	NPT	Hex	Weight in ounces[3] S – 2½″ Case Series		
													CI	EI	EL
CI, EI	2″	Rear (Plain)	2 3/32 (53)	3/8 (10)	5/16 (8)	–	–	–	–	–[2]	–	11/16	4½	4½	–
CI, EI	2″	Rear (Plain, pointed stem)	2 3/32 (53)	3/8 (10)	5/16 (8)	–	–	–	–	–[2]	–	11/16	4½	4½	–
CI, EI	2″	Rear (Threaded)	2 3/32 (53)	3/8 (10)	5/16 (8)	–	–	–	–	–[2]	¼	11/16	4½	4½	–
CI, EI, EL	3″	Rear	3 5/32 (80)	19/32 (15)	5/16 (8)	–	–	–	–	–[2]	½	⅞	7	7	8
CI, EI	3″	Lower	3 5/32 (80)	1 27/32 (47)	–	2 5/8 (67)	¼ (6)	–	–	–[2]	½	⅞	11	11	–
EI	3″	Everyangle	3 5/32 (80)	19/32 (15)	–	–	–	1 21/32 (42)	3 7/16 (87)	–[2]	½	⅞	–	10	–
CI, EI, EL	5″	Rear	5 1/32 (128)	23/32 (18)	5/16 (8)	–	–	–	–	–[2]	½	⅞	15	16	18
CI, EI	5″	Lower	5 1/32 (128)	1 15/16 (49)	–	3 5/8 (92)	¼ (6)	–	–	–[2]	½	⅞	24	26	–
EI, EL	5″	Everyangle	5 1/16 (128)	23/32 (18)	–	–	–	1 7/8 (48)	3 9/16 (91)	–[2]	½	⅞	–	25	28

NOTES

1 Figures in parenthesis ( ) are in millimeters. All other dimensions are in inches.

2 Standard "S" dimensions are 2½, 4, 6, 9, 12, 15, 18 and 24 inches. Standard stem diameter is ¼ inch.

3 Add 1 oz. for every 2 inches of stem length.

DURATEMP® THERMOMETERS

REMOTE READING THERMOMETERS

Product Selection Information 217

Duratemp Thermometer, Remote Mount, 600A-01 Series..... 218

Duratemp Thermometer, Remote Mount, 600A-02 Series..... 219

Duratemp Thermometer, Remote Mount, 600A-03 Series..... 220

Duratemp Thermometer, Remote Mount, 600A-04 Series..... 221

Duratemp Thermometer, Remote Mount, 600H-45 Series..... 222

DIRECT READING THERMOMETERS

Duratemp Thermometer, Direct Mount, 600B Series 223

Duratemp Thermometer, Case, Bulb and Armor Dimensions..... 224

Case Dimensions 225-226

Thermowells 227

Bimetal and Duratemp® Thermometer Options..... 228

Accessories..... 229

ASHCROFT®

Product Selection Information
Duratemp® Remote-Mount Thermometers

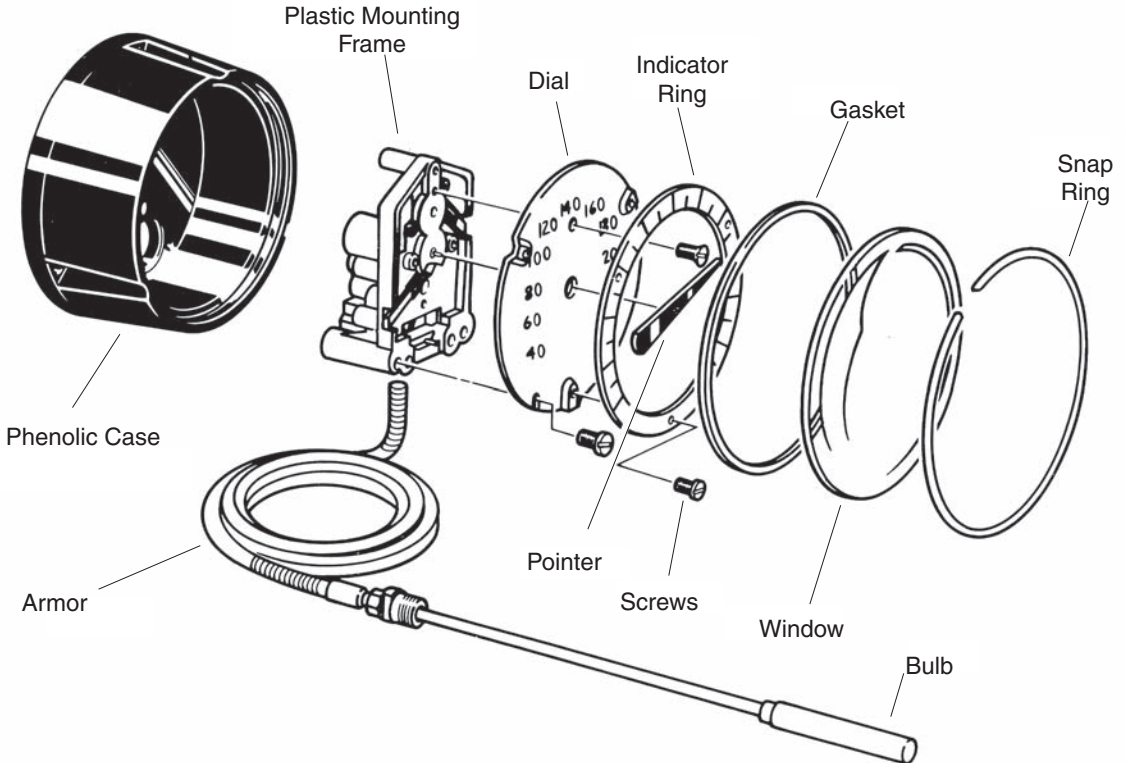

The superiority of a Duratemp® thermometer is revealed by comparison to conventional thermometry. Conventional gas thermometers operate on the principle that the absolute pressure is proportional to the absolute temperature. To obtain a usable temperature span, elevated working pressures must be used which frequently produce high stresses in the Bourdon tube. These high stresses reduce instrument life and may be hazardous.

The Duratemp thermometer on the other hand utilizes a combination of inert gas and activated carbon called a molecular sieve. This combination produces much lower internal pressures than conventional thermometers for the same temperature span. These lower pressures are transmitted to a compact helical Bourdon tube. The Bourdon tube connects directly to the pointer shaft thus eliminating the traditional movement assembly.

With this advantage the Duratemp thermometer is able to provide long life and sustained accuracy under the most adverse shock and vibration conditions.

Accuracy: ±1% of range span.

Bulb Size: 3″ long by ⅜″ O.D. bulb.

Bulb Material: 316SS

Ambient Error: Ambient error is a function of line length, ambient temperature and other system parameters. The error at midscale will be ±½% of range span for a ±25°F change in ambient temperature, for a typical thermometer. Consult factory for details.

Vibration and Shock Resistance: Extreme resistance similar to that required by MIL-T-19646.

Actuation: Gas/activated carbon. Pointer driven directly by lightweight helical Bourdon tube which is silicone damped.

Field Zero Adjustment: Adjustable pointer.

Over-range: Minimum 25% of span beyond top of range. If greater over-range is anticipated, consult Customer Service.

Head Error: None. No correction required for any mounting configuration.

Capillary Material: 300 SS

Line Length: 5-80 ft in standard increments.

Armor: AISI 302 Spring Armor as standard.

Dial Sizes: Maxivision® anti-parallax two piece dial design 4½″ and 6″ sizes – Celcius or Fahrenheit. Single plane design for all dual scales and 8½″ size.

Ranges: Standard Fahrenheit ranges available from –320°F to 1200°F. Celsius and dual scale also available.

Cases: 5 basic cases with lower or back connections, surface or flush mounted in stainless steel, phenolic or aluminum. All remote mount cases are field interchangeable, within the same range. Direct mount units available 4½″ stainless steel case only. (Everyangle)

Direct Mount Stem Lengths: Eight standard increments of semi-rigid stainless steel from 6 inches to 36 inches.

Direct Mount Union: ½ NPT union connection fixed at the top of the stem.

Operating Conditions: The maximum case temperature should not exceed 160°F (71°C). The line should be laid so that it will not be exposed to extreme temperatures such as nearby steam pipes, ovens or other heated surfaces.

Thermowells: Thermowells must be used on any application where the bulb of the thermometer may be exposed to pressure, corrosive fluids or high velocity. Additionally, the use of a thermowell permits instrument interchangeability or recalibration without shutting down the process.

Dials: Aluminum dials have highly legible black markings on a white background. The Maxivision dial is a linear anti-parallax dial for excellent readability in the 4½″ and 6″ sizes. The divisions and the pointer are in the same plane which allows readability from any angle without parallax error.

Windows: The standard window for the Duratemp thermometer is glass. Shatterproof glass and plastic disc windows are optional.

MERCURY FREE

Gas Filled: NIOSH and OSHA compliance for mercury contamination hazards. Protects personnel and processes from accidental contamination.

No Head or Elevation Error: Gear and pinion movements are eliminated, resulting in increased instrument life and reduced replacement costs.

Silicone damped Bourdon tube eliminates damage from shock and vibration.

Consult factory for guidance in product selection
Phone (203) 378-8281 or visit our
web site at www.ashcroft.com

ASHCROFT®

Duratemp® Thermometer
Series 600A-01
Accuracy (±1% F.S.)

- ***Exclusive movementless design resists shock and vibration – no gears to wear or misalign resulting in increased instrument life***
- ***Gas-operated molecular sieve***
- ***No elevation error***
- ***Mercury free***
- ***One bulb size for all ranges***
- ***±1% full-span accuracy***
- ***Maxivision® dial***
- ***Limited five-year warranty***

A high impact-resistant polished stainless steel case. Bayonet ring facilitates easy removal for glass replacement and pointer adjustment. A versatile case that enables surface or flush mounting. Available in 4½″ dial size.

SELECTION TABLE

600A — 01 — C01 — B01 — A1 — L07 — AK

600A

Table 1

CASE STYLE	
CODE	DESCRIPTION
01	ST. ST. BAYONET RING

Table 2

CASE SIZE		MOUNTING			
		MOUNTING		CONNECTION	
CODE	SIZE	SURFACE	FLUSH	LOWER	REAR
C01	4½	✓		✓	
C11	4½		✓		✓

Table 3

BULB STYLES*	
CODE	DESCRIPTION
B01	12″ Bendable extension with ½ NPT union connection
B03	Plain bulb with rigid extension, no union
B08	Plain bulb with rigid extension, ½ NPT union on armor
B17	18″ Bendable extension with ½ NPT union connection
B18	24″ Bendable extension with ½ NPT union connection

*Minimum recommended insertion length ("u" dimension) in liquids is 4 inches and in gases is 6 inches for standard ⅜ x 3″ bulb

Table 4

ARMOR STYLE	
CODE	DESCRIPTION
A1	Stainless Steel Spring

Table 5(1)

LINE LENGTH	
CODE	LINE LENGTH
L01	5′
L03	10′
L07	20′
L09	30′
L13	50′
L19	80′

Table 6

RANGES	
CODE	SINGLE RANGES
AB	–320/200°F
AE	–100/100°F
AG	–40/180°F
AK	20/240°F
AL	50/300°F
AN	50/550°F
AR	50/750°F
AT	400/1200°F
AY	–200/100°C
BL	–80/40°C
BN	–40/80°C
BS	0/120°C
BT	10/150°C
BU	0/300°C
BW	0/400°C
BJ	200/650°C
	DUAL RANGES
CE	20/240°F
	0/120°C
CF	50/550°F
	0/300°C
DR	50/300°F
	10/150°C
DT	–40/180°F
	–40/80°C

(1) Capillary length is measured from bottom of case to top of bulb extension.

TO ORDER THIS DURATEMP 600A-01 THERMOMETER:

Select: 600A 01 C01 B01 A1 L07 AK XNH

1. Case Style: Stainless Steel/Bayonet Ring — Table 1
2. Case Size & Mounting: 4½″ Surface, Lower — Table 2
3. Bulb Style: 12″ Bendable Extension with Union Connection — Table 3
4. Armor Style: Stainless Steel Spring — Table 4
5. Line Length: 20 feet — Table 5
6. Temperature Range: 20/240°F — Table 6
7. Options: Stainless Steel Tag — (See Page 228)

Consult factory for guidance in product selection
Phone (203) 378-8281 or visit our
web site at www.ashcroft.com

MADE IN U.S.A.

ASHCROFT®

Duratemp® Thermometer
Series 600A-02
Accuracy (±1% F.S.)

- ***Exclusive movementless design resists shock and vibration – no gears to wear or misalign resulting in increased instrument life***
- ***Gas-operated molecular sieve***
- ***No elevation error***
- ***Mercury free***
- ***One bulb size for all ranges***
- ***±1% full-span accuracy***
- ***Maxivision® dial***
- ***Limited five-year warranty***

An aluminum case with a durable epoxy finish. Designed specifically for panel mounting. A hinged ring permits glass replacement and pointer adjustment. Available in 4½˝, 6˝ and 8½˝ sizes.

SELECTION TABLE

600A — 02 — C12 — B01 — A1 — L07 — AK

600A

Table 1

CASE STYLE	
CODE	DESCRIPTION
02	ALUMINUM HINGED RING

Table 2

CASE SIZE		MOUNTING			
		MOUNTING		CONNECTION	
CODE	SIZE	SURFACE	FLUSH	LOWER	REAR
C12	4½		✓		✓
C27	6		✓		✓
C35	8½		✓		✓

Table 3

BULB STYLES*	
CODE	DESCRIPTION
B01	12˝ Bendable extension with ½ NPT union connection
B03	Plain bulb with rigid extension, no union
B08	Plain bulb with rigid extension, ½ NPT union on armor
B17	18˝ Bendable extension with ½ NPT union connection
B18	24˝ Bendable extension with ½ NPT union connection

*Minimum recommended insertion length ("u" dimension) in liquids is 4 inches and in gases is 6 inches for standard ⅜ x 3˝ bulb

Table 4

ARMOR STYLE	
CODE	DESCRIPTION
A1	Stainless Steel Spring

Table 5(1)

LINE LENGTH	
CODE	LINE LENGTH
L01	5´
L03	10´
L07	20´
L09	30´
L13	50´
L19	80´

Table 6

RANGES	
CODE	SINGLE RANGES
AB	–320/200°F
AE	–100/100°F
AG	–40/180°F
AK	20/240°F
AL	50/300°F
AN	50/550°F
AR	50/750°F
AT	400/1200°F
AY	–200/100°C
BL	–80/40°C
BN	–40/80°C
BS	0/120°C
BT	10/150°C
BU	0/300°C
BW	0/400°C
BJ	200/650°C
	DUAL RANGES
CE	20/240°F
	0/120°C
CF	50/550°F
	0/300°C
DR	50/300°F
	10/150°C
DT	–40/180°F
	–40/80°C

(1) Capillary length is measured from bottom of case to top of bulb extension.

TO ORDER THIS DURATEMP 600A-02 THERMOMETER:

Select: **600A 02 C12 B01 A1 L07 AK XNH**

1. Case Style: Aluminum/Hinged Ring — Table 1
2. Case Size & Mounting: 4½˝ Flush, Rear — Table 2
3. Bulb Style: 12˝ Bendable Extension with Union Connection — Table 3
4. Armor Style: Stainless Steel Spring — Table 4
5. Line Length: 20 feet — Table 5
6. Temperature Range: 20/240°F — Table 6
7. Options: Stainless Steel Tag — (See Page 228)

Consult factory for guidance in product selection
Phone (203) 378-8281 or visit our
web site at www.ashcroft.com

MADE IN U.S.A.

ASHCROFT®

Duratemp® Thermometer
Series 600A-03
Accuracy (±1% F.S.)

- ***Exclusive movementless design resists shock and vibration – no gears to wear or misalign resulting in increased instrument life***
- ***Gas-operated molecular sieve***
- ***No elevation error***
- ***Mercury free***
- ***One bulb size for all ranges***
- ***±1% full-span accuracy***
- ***Maxivision® dial***
- ***Limited five-year warranty***

A black-coated aluminum case with excellent impact resistance. Threaded ring permits adjustment. Available in 4½″ and 6″ sizes.

SELECTION TABLE

600A — 03 — C02 — B01 — A1 — L07 — AK

600A

Table 1

CASE STYLE	
CODE	DESCRIPTION
03	ALUMINUM THREADED RING

Table 2

CASE SIZE		MOUNTING			
		MOUNTING		CONNECTION	
CODE	SIZE	SURFACE	FLUSH	LOWER	REAR
C02	4½	✓		✓	
C15	6	✓		✓	

Table 3

BULB STYLES*	
CODE	DESCRIPTION
B01	12″ Bendable extension with ½ NPT union connection
B03	Plain bulb with rigid extension, no union
B08	Plain bulb with rigid extension, ½ NPT union on armor
B17	18″ Bendable extension with ½ NPT union connection
B18	24″ Bendable extension with ½ NPT union connection

*Minimum recommended insertion length ("u" dimension) in liquids is 4 inches and in gases is 6 inches for standard ⅜ x 3″ bulb

Table 4

ARMOR STYLE	
CODE	DESCRIPTION
A1	Stainless Steel Spring

Table 5(1)

LINE LENGTH	
CODE	LINE LENGTH
L01	5′
L03	10′
L07	20′
L09	30′
L13	50′
L19	80′

Table 6

RANGES	
CODE	SINGLE RANGES
AB	–320/200°F
AE	–100/100°F
AG	–40/180°F
AK	20/240°F
AL	50/300°F
AN	50/550°F
AR	50/750°F
AT	400/1200°F
AY	–200/100°C
BL	–80/40°C
BN	–40/80°C
BS	0/120°C
BT	10/150°C
BU	0/300°C
BW	0/400°C
BJ	200/650°C
	DUAL RANGES
CE	20/240°F 0/120°C
CF	50/550°F 0/300°C
DR	50/300°F 10/150°C
DT	–40/180°F –40/80°C

(1) Capillary length is measured from bottom of case to top of bulb extension.

TO ORDER THIS DURATEMP 600A-03 THERMOMETER:

Select: **600A 03 C02 B01 A1 L07 AK XNH**

1. Case Style: Aluminum/Threaded Ring — Table 1
2. Case Size & Mounting: 4½″ Surface, Lower — Table 2
3. Bulb Style: 12″ Bendable Extension with Union Connection — Table 3
4. Armor Style: Stainless Steel Spring — Table 4
5. Line Length: 20 feet — Table 5
6. Temperature Range: 20/240°F — Table 6
7. Options: Stainless Steel Tag — (See Page 228)

Consult factory for guidance in product selection
Phone (203) 378-8281 or visit our
web site at www.ashcroft.com

MADE IN U.S.A.

ASHCROFT®

Duratemp® Thermometer
Series 600A-04
Accuracy (±1% F.S.)

- ***Exclusive movementless design resists shock and vibration – no gears to wear or misalign resulting in increased instrument life***
- ***Gas-operated molecular sieve***
- ***No elevation error***
- ***Mercury free***
- ***One bulb size for all ranges***
- ***±1% full-span accuracy***
- ***Maxivision® dial***
- ***Limited five-year warranty***

The phenolic case construction is ideal for most ambient conditions. Flush or surface mounting. Snap ring permits pointer adjustment. Available in 4½″ and 6″ sizes.

SELECTION TABLE

600A — 04 — C03 — B01 — A1 — L07 — AK

600A

Table 1

CASE STYLE	
CODE	DESCRIPTION
04	PHENOLIC SNAP RING

Table 2

CASE SIZE		MOUNTING			
		MOUNTING		CONNECTION	
CODE	SIZE	SURFACE	FLUSH	LOWER	REAR
C03	4½	✓		✓	
C08	4½	✓			✓
C38	4½		✓		✓
C16	6	✓		✓	

Table 3

BULB STYLES*	
CODE	DESCRIPTION
B01	12″ Bendable extension with ½ NPT union connection
B03	Plain bulb with rigid extension, no union
B08	Plain bulb with rigid extension, ½ NPT union on armor
B17	18″ Bendable extension with ½ NPT union connection
B18	24″ Bendable extension with ½ NPT union connection

*Minimum recommended insertion length ("u" dimension) in liquids is 4 inches and in gases is 6 inches for standard ⅜ x 3″ bulb

Table 4

ARMOR STYLE	
CODE	DESCRIPTION
A1	Stainless Steel Spring

Table 5(1)

LINE LENGTH	
CODE	LINE LENGTH
L01	5′
L03	10′
L07	20′
L09	30′
L13	50′
L19	80′

Table 6

RANGES	
CODE	SINGLE RANGES
AB	–320/200°F
AE	–100/100°F
AG	–40/180°F
AK	20/240°F
AL	50/300°F
AN	50/550°F
AR	50/750°F
AT	400/1200°F
AY	–200/100°C
BL	–80/40°C
BN	–40/80°C
BS	0/120°C
BT	10/150°C
BU	0/300°C
BW	0/400°C
BJ	200/650°C
	DUAL RANGES
CE	20/240°F 0/120°C
CF	50/550°F 0/300°C
DR	50/300°F 10/150°C
DT	–40/180°F –40/80°C

(1) Capillary length is measured from bottom of case to top of bulb extension.

TO ORDER THIS DURATEMP 600A-04 THERMOMETER:

Select: 600A 04 C03 B01 A1 L07 AK XNH

1. Case Style: Phenolic Snap Ring — Table 1
2. Case Size & Mounting: 4½″ Surface, Lower — Table 2
3. Bulb Style: 12″ Bendable Extension with Union Connection — Table 3
4. Armor Style: Stainless Steel Spring — Table 4
5. Line Length: 20 feet — Table 5
6. Temperature Range: 20/240°F — Table 6
7. Options: Stainless Steel Tag — (See Page 228)

Consult factory for guidance in product selection
Phone (203) 378-8281 or visit our
web site at www.ashcroft.com

MADE IN U.S.A.

ASHCROFT®

Duratemp® Thermometer
Series 600H-45
Accuracy (±1% F.S.)

- ***Exclusive movementless design resists shock and vibration – no gears to wear or misalign resulting in increased instrument life***
- ***Gas-operated molecular sieve***
- ***No elevation error***
- ***Mercury free***
- ***One bulb size for all ranges***
- ***±1% full-span accuracy***
- ***Maxivision® dial***
- ***Limited five-year warranty***
- ***IP 65***

This hermetically sealed case is designed for applications where extreme moisture or dust is present. Available in a 4½˝ solid front phenolic turret case, lower connection.

SELECTION TABLE

600H — 45 — C60 — B01 — A1 — L07 — AK

600H

Table 1 – CASE STYLE

CODE	DESCRIPTION
45	PHENOLIC HERMETICALLY SEALED

Table 2 – CASE SIZE & MOUNTING

CODE	SIZE	MOUNTING: SURFACE	MOUNTING: FLUSH	CONNECTION: LOWER	CONNECTION: REAR
C60	4½	✓		✓	

Table 3 – BULB STYLES*

CODE	DESCRIPTION
B01	12˝ Bendable extension with ½ NPT union connection
B03	Plain bulb with rigid extension, no union
B08	Plain bulb with rigid extension, ½ NPT union on armor
B17	18˝ Bendable extension with ½ NPT union connection
B18	24˝ Bendable extension with ½ NPT union connection

*Minimum recommended insertion length (“u” dimension) in liquids is 4 inches and in gases is 6 inches for standard ⅜ x 3˝ bulb

Table 4 – ARMOR STYLE

CODE	DESCRIPTION
A1	Stainless Steel Spring

Table 5(1) – LINE LENGTH

CODE	LINE LENGTH
L01	5´
L03	10´
L07	20´
L09	30´
L13	50´
L19	80´

Table 6 – RANGES

CODE	SINGLE RANGES
AB	–320/200°F
AE	–100/100°F
AG	–40/180°F
AK	20/240°F
AL	50/300°F
AN	50/550°F
AR	50/750°F
AT	400/1200°F
AY	–200/100°C
BL	–80/40°C
BN	–40/80°C
BS	0/120°C
BT	10/150°C
BU	0/300°C
BW	0/400°C
BJ	200/650°C
	DUAL RANGES
CE	20/240°F 0/120°C
CF	50/550°F 0/300°C
DR	50/300°F 10/150°C
DT	–40/180°F –40/80°C

(1) Capillary length is measured from bottom of case to top of bulb extension.

TO ORDER THIS DURATEMP 600H-45 THERMOMETER:

Select:

		600H	45	C60	B01	A1	L07	AK	XNH
1. Case Style: Phenolic Hermetically Sealed	Table 1								
2. Case Size & Mounting: 4½˝ Surface, Lower	Table 2								
3. Bulb Style: 12˝ Bendable Extension with Union Connection	Table 3								
4. Armor Style: Stainless Steel Spring	Table 4								
5. Line Length: 20 feet	Table 5								
6. Temperature Range: 20/240°F	Table 6								
7. Options: Stainless Steel Tag	(See Page 228)								

Consult factory for guidance in product selection
Phone (203) 378-8281 or visit our
web site at www.ashcroft.com

MADE IN U.S.A.

ASHCROFT®

Duratemp® Thermometer
Direct-Mounted Series 600B
Accuracy (1% F.S.)

- ***Exclusive movementless design resists shock and vibration – no gears to wear out – or misalign resulting in increased instrument life***
- ***Gas-operated molecular sieve***
- ***Mercury free***
- ***1% full-span accuracy***
- ***Everyangle Duratemp® thermometer can be rotated 360° and can be angled 180°, ensuring readability in any installation***
- ***Maxivision® dial***
- ***Limited five-year warranty***

The direct-reading thermometer (stainless steel case only) offers the same unique features of the Ashcroft® Duratemp® remote-reading thermometer for those critical applications where only a direct-connected instrument can be used. Available in 4½″ dial size.

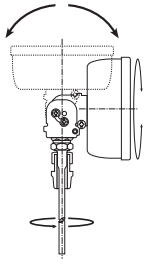

The Everyangle™ Duratemp® thermometer may be rotated 360° for readability and the stem turned 180° for the most challenging installations.

SELECTION TABLE

600B — 01 — AB

Type	Table 1		Table 2			
600B	CODE	STEM LENGTH	CODE	SINGLE RANGES	CODE	DUAL RANGES
DIRECT-MOUNTED	01	Semirigid Stainless Steel 6″	AB	–320/200°F	CE	20/240°F 0/120°C
	02	Semirigid Stainless Steel 9″	AE	–100/100°F		
	03	Semirigid Stainless Steel 12″	AG	–40/180°F	CF	50/550°F 0/300°C
	04	Semirigid Stainless Steel 15″	AK	20/240°F		
	05	Semirigid Stainless Steel 18″	AL	50/300°F	DR	50/300°F 10/150°C
	06	Semirigid Stainless Steel 24″	AN	50/550°F		
	07	Semirigid Stainless Steel 30″	AR	50/750°F*	DT	–40/180°F –40/80°C
	08	Semirigid Stainless Steel 36″	AT	400/1200°F*		
			AY	–200/100°C		
			BL	–80/40°C		
			BN	–40/80°C		
			BS	0/120°C		
			BT	10/150°C		
			BU	0/300°C		
			BW	0/400°C*		
			BJ	200/650°C*		

*For these ranges a minimum "S" dimension (stem length) of 9 inches is required. This removes case from exposure to high temperature which may damage the instrument.

NOTE: Thermowells must be used whenever an Ashcroft Duratemp® thermometer is installed on a pressurized application or where fluid velocity or corrosive media is present.

TO ORDER THIS 600B DURATEMP THERMOMETER:

SELECT — **600B 01 AB XNH**

1. Stem Length: Length: 6″ _____ Table 1
2. Temperature Range: –320/200°F _____ Table 2
3. Options: Stainless Steel Tag _____ (See Page 228)

Consult factory for guidance in product selection
Phone (203) 378-8281 or visit our
web site at www.ashcroft.com

MADE IN U.S.A.

Style B01, B17 and B18

Bendable Extension,
Union Connection

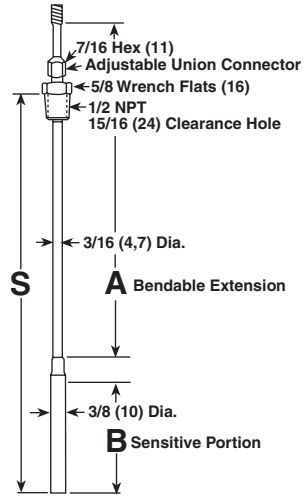

Bulb Code	Bulb Size "B"	"A"	"S" Max.	"S" Min.
B01	3 (76)	12 (305)	15 (381)	4 (102)
B17	3 (76)	18 (457)	21 (533)	4 (102)
B18	3 (76)	24 (610)	27 (686)	4 (102)

Style B03

Plain

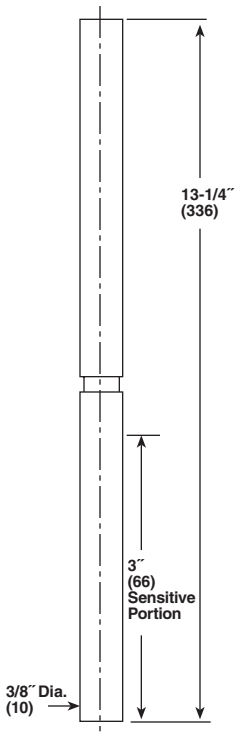

Style B08

Long Extension, Locking Fitting

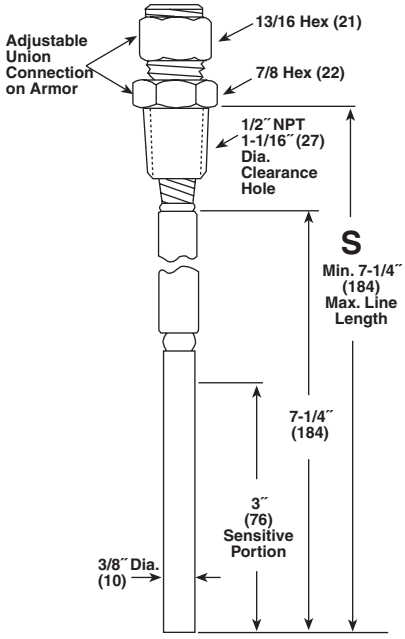

600B Everyangle

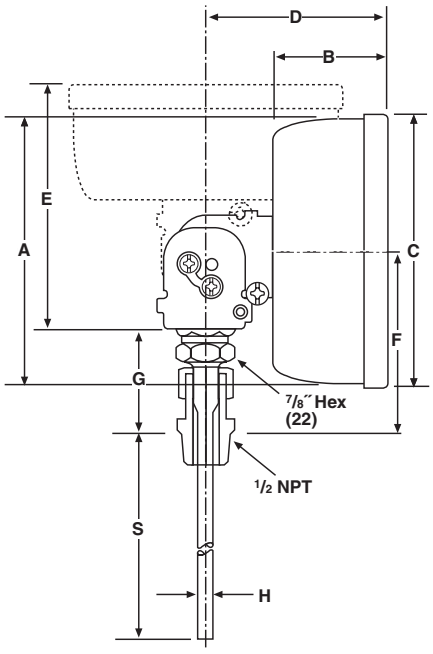

FOR TEMPERATURES BELOW 750°F	
S	U-Dimension (Insertion Length)
6 (152)	4½ (114)
9 (229)	7½ (191)
12 (305)	10½ (268)

FOR TEMPERATURES 750°F AND ABOVE USE WELL WITH 3″ LAG		
S	Well Lag	U-Dimension (Insertion Length)
9 (229)	3	4½ (114)
12 (305)	3	7½ (191)
15 (381)	3	10½ (268)

Dial Size Inches	A	B	C	D	E	F	G	H
4½	4 23/32 (120)	2 1/16 (52)	5 1/32 (128)	3 11/64 (81)	4 13/16 (122)	3 (76)	1 (25)	3/8 (10)

NOTE: Dimensions in inches, ( ) are miliimeters.

600A-01 Stainless Steel Case

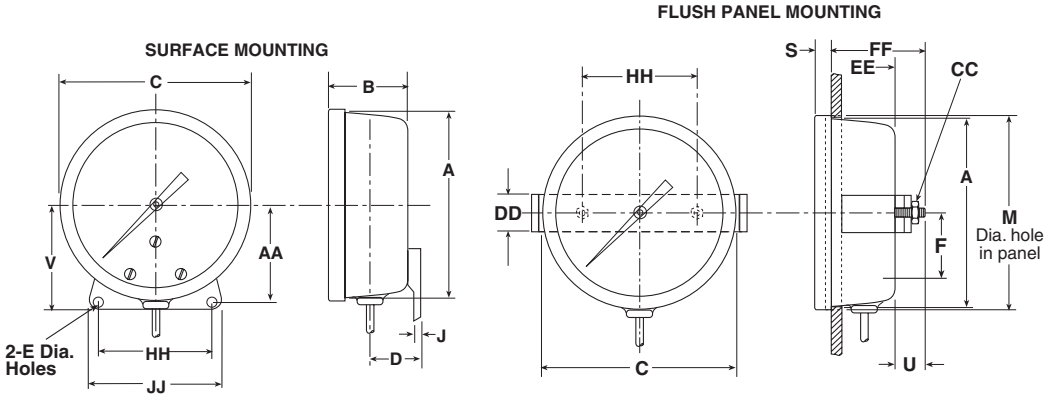

Dial Size Inches	A	B	C	D	E	F	J	M	S	U	AA	CC	DD	FF	EE	HH	JJ
4½	4 23/32 (120)	2 3/16 (56)	5 1/8 (130)	1 1/16 (27)	7/32 (6)	1 5/8 (141)	1/16 (2)	4 25/32 (121)	7/16 (11)	1 7/16 (37)	2 5/8 (67)	#10-32	1 (25)	2 1/4 (57)	1 5/8 (41)	3 (76)	3 1/2 (89)

NOTE: Dimensions in inches, ( ) are miliimeters.

600A-02 Hinged Ring Case

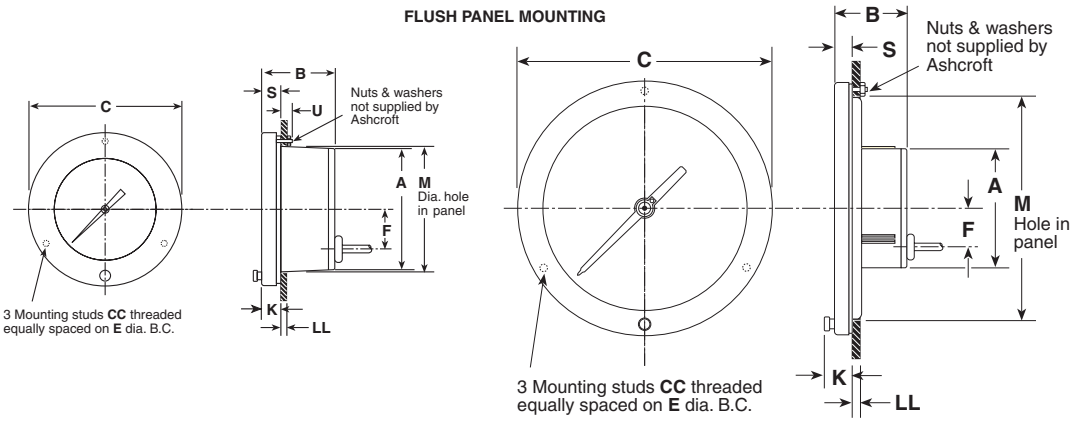

4½″ and 6″ Back Connection

8½″ Back Connection

Case Size Inches	A	B	C	E	F	K	M	S	U	CC	LL
4½	4.75 (120.7)	2 3/16 (56)	6.03 (153)	5 3/8 (137)	1 5/8 (41)	1 1/16 (27)	4 7/8 (124)	5/8 (16)	3/4 (19)	10-24	1/8 (3) 1/2 (13)
6	4.87 (123.7)	2 1/4 (57)	7.50 (190.5)	7 (178)	2 1/8 (54)	1 1/16 (27)	6 1/2 (165)	5/8 (16)	3/4 (19)	1/4-20	1/8 (3) 1/2 (13)
8½	4.75 (120.7)	2 1/4 (57)	9.96 (253)	9 5/8 (244)	2 1/8 (54)	1 1/16 (27)	9 (229)	5/8 (16)	3/4 (19)	1/4-20	1/8 (3) 1/2 (13)

NOTE: Dimensions in inches, ( ) are miliimeters.

600A-03 Aluminum-Threaded Ring Case

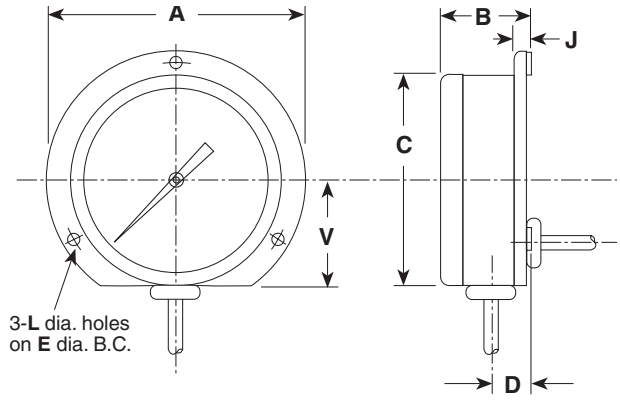

Case Size Inches	A	B	C	D	E	J	L	V
4½	5 13/16 (148)	2 3/8 (57)	5 1/32 (126)	1 7/32 (24)	5 3/8 (137)	5/8 (10)	7/32 (5,5)	2 3/8 (60)
6	7 5/8 (194)	2 1/4 (57)	6 1/2 (165)	15/16 (24)	7 (178)	7/16 (11)	9/32 (7)	3 1/8 (79)

APPROXIMATE WEIGHT (LBS.) FOR ALL REMOTE READING DURATEMP THERMOMETERS			
Line Length	Case Size		
	4½˝	6˝	8½˝
5´	1.75	2.55	3.40
10´	2.05	2.85	3.70
20´	2.65	3.45	4.30
30´	3.25	4.05	4.90
50´	4.45	5.25	6.10
80´	6.25	7.05	7.90

600A-04, 600H-45 Phenolic Case

SURFACE MOUNTING

FLUSH MOUNTING

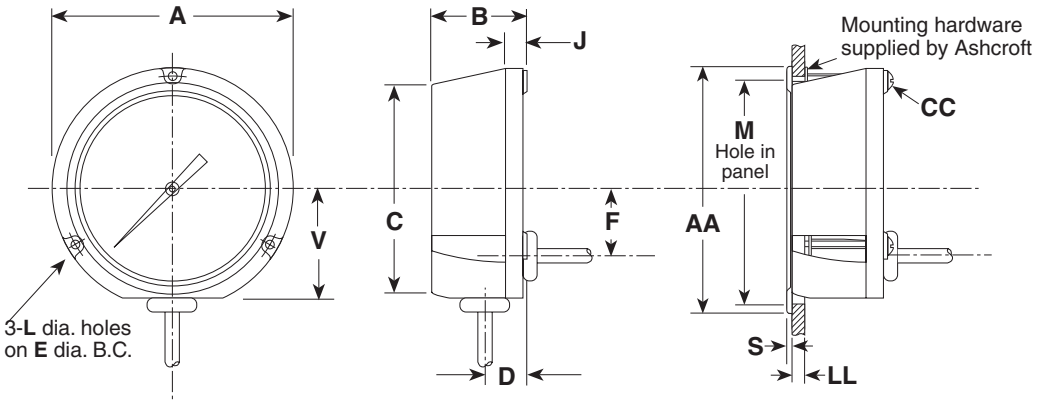

Model	Case Size Inches	A	B	C	D	E	F	J	L	S	V	AA	M	LL	PP
600A-04	4½	5 13/16 (148)	2 5/16 (59)	5 1/16 (129)	1 (25)	5 3/8 (137)	1 5/8 (41)	9/16 (14)	7/32 (5,5)	3/16 (5)	2 5/8 (67)	6 (154)	5 37/64 (148)	1/16 - 1/2 (2)-(13)	#10-24 x 7/8
	6	7 5/8 (194)	2 3/8 (60)	6 5/8 (168)	1 1/16 (27)	7 (178)	2 1/8 (54)	5/8 (16)	9/32 (7)	3/16 (5)	3 1/2 (89)	7 3/4 (197)	7 17/64 (185)	1/16 - 1/2 (2)-(13)	#1/4-20 x 7/8
600H-45	4½	5 13/16 (148)	3 3/8 (86)	5 1/16 (129)	1 5/8 (41)	5 3/8 (137)	—	1 (25)	7/32 (5,5)	3/16 (5)	2 5/8 (67)	6 (154)	5 37/64 (148)	1/16 - 1/2 (2)-(13)	#10-24 x 7/8

NOTE: Dimensions in inches, ( ) are miliimeters.

TYPICAL ORDER CODE EXAMPLE (THREADED)

75	W	0750			H	T	260	C				
Size		U-Dimesion	Thread	Lagging	Shank	Type	Bore	Material	Cap & Chain	Facing	Rating	Special Lagging Length

Code	Inches
50	½
75	¾
10	1
12	1¼
15	1½
20	2
30	3
40	4

Code	Inches
0162	1⅝
0250	2½
0450	4½
0750	7½
1050	10½
1350	13½
1650	16½
1950	19½
2250	22½

Code	Inches
–	Without
L	With

Code	Type
T	NPT Thd.
W	Weld-in
F	Flanged
V	Van Stone
S	Socket Weld
M	Limited Space Threaded
G	Ground Joint
C	Sanitary

Code	Type
AA	Brass
B	Carbon Steel
C	AISI 304
S	AISI 316

Code	Material
1	Brass
2	Stainless Steel

Code	Rating #
150	150
300	300
600	600
1500	1500
2500	2500

Code	Internal Thread
–	½ NPSM

Code	Shank
H	Tapered
S	Straight
R	Stepped
B	Built-up

Code	Diameter
260	.260″
385	.385″

Code	Facing
F	Flat Face
R	Raised Face
J	Ring Joint
L	Lap Joint

Type: Straight (Uniform) Shank, Threaded
Bore Size: .260, .385
Process Conn.: ½, ¾, 1 NPT
Materials: Brass, Carbon Steel
304 Stainless Steel, 316 Stainless Steel

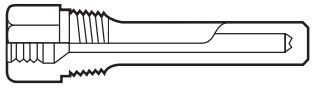

Standard Configuration

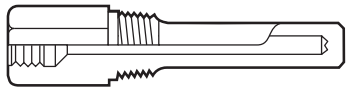

Lagging Configuration

Type: Stepped Shank, Threaded
Bore Size: .260
Process Conn.: ½, ¾, 1 NPT
Materials: Brass, Carbon Steel
304 Stainless Steel, 316 Stainless Steel

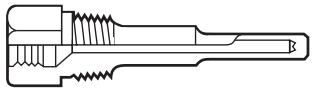

Standard Configuration

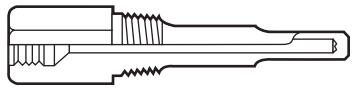

Lagging Configuration

Type: Tapered Shank, Threaded
Bore Size: .260, .385
Process Conn.: ½, ¾, 1 NPT
Materials: Brass, Carbon Steel
304 Stainless Steel, 316 Stainless Steel

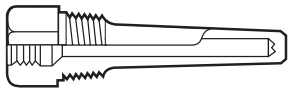

Standard Configuration

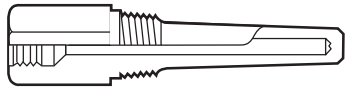

Lagging Configuration

Type: Socket Weld
Bore Size: .260, .385
Process Conn.: ¾″, 1″ Pipe Size
Materials: 304 Stainless Steel, 316 Stainless Steel, Carbon Steel

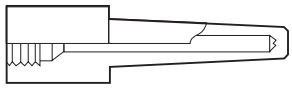

Standard Configuration

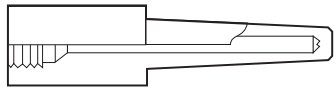

Lagging Configuration

Type: Van Stone
Bore Size: .260, .385
Process Conn.: 1,″ 1½″ Pipe Size
Materials: 304 Stainless Steel, 316 Stainless Steel

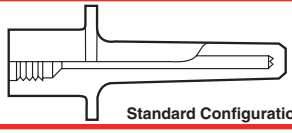

Standard Configuration

Type: Weld-in
Bore Size: .260, .385
Process Conn.: 1½″ Dia.
Materials: 304 Stainless Steel, 316 Stainless Steel

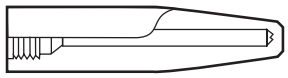

Standard Configuration

Type: Flanged
Bore Size: 260, .385
Process Conn.: 1″, 1½″, 2″ Pipe Size
Materials: 304 Stainless Steel, 316 Stainless Steel

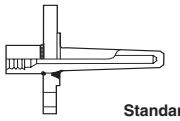

Standard Configuration

Type: Sanitary
Bore Size: .260, .385
Process Conn.: Tri-Clamp connection® 1″, 1½″, 2″
Materials: 304 Stainless Steel, 316 Stainless Steel

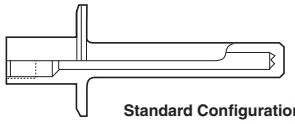

Standard Configuration

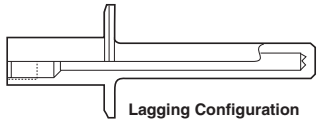

Lagging Configuration

Consult factory for guidance in product selection
Phone (203) 378-8281 or visit our
web site at www.ashcroft.com

MADE IN U.S.A.

ASHCROFT®

Bimetal Thermometer and Duratemp® Thermometer Options

DURATEMP AND BIMETAL OPTIONS			
Code	**Description**	**Bimetal**	**Duratemp**
XCS[1]	Dual scale	●	●
XDM	Dial marking	●	●
XED[2]	High and low electric contacts		●
XEE[2]	Double high-electric contacts		●
XEF[2]	Double low-electric contacts		●
XEG[2]	Electric contacts off at low or high and on in-between		●
XEO	Externally adjustable red set hand		●
XEP	Externally adjustable maximum pointer		●
XEQ	Externally adjustable minimum pointer		●
XNG	Nonglare		●
XNN	Paper tag	●	●
XNH	Stainless steel tag	●	●
XPD[3]	Plastic window	●	●
XSG[3]	Shatterproof glass	●	●
XSH	Stationary red set hand		●
XTK	Tank car thermometer		●
X3B[4]	⅜″ stem diameter with ½ NPT	●	
X02[5]	¼ NPT when ½ NPT is standard	●	

1. 3″ and 5″ case only.
2. 4½″ and 6″ – 600A02, 600A03 and 600A04 styles only.
3. Not available on EL liquid filled thermometers. Polycarbonate is the standard window on EL series.
4. Not available on 2″ case.
5. Only available on rear connect.

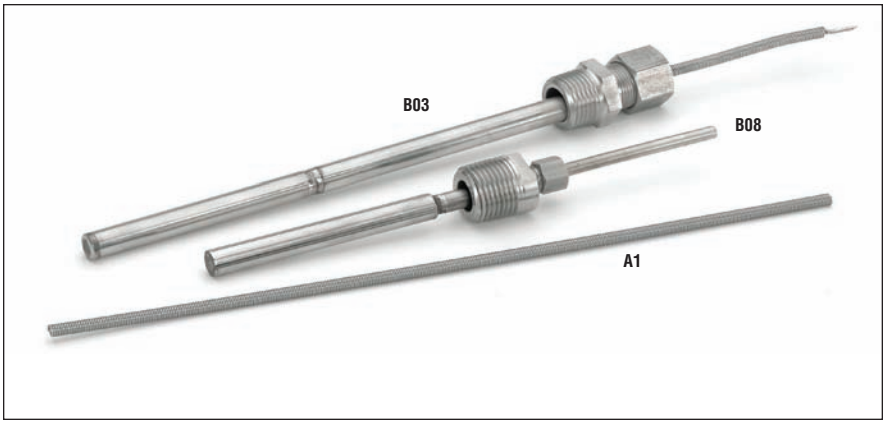

BULB AND ARMOR STYLED – REMOTE MOUNTED

Styles B01, B17 and B18 are bendable extensions with union connections. B01 (12″ bendable extension) is the standard Duratemp® bulb style and is suitable for a variety of insertion lengths and lagging requirements. B17 is a 18″ bendable extension, B18 is a 24″ bendable extension. The union connection on all three styles is pressure tight and can be freely moved the entire length of the bendable portion. After installation, the bendable extension may be formed to suit the application.

Style B03

13″ plain bulb for applications used in open tanks where pressures and velocities are negligible.

Style B08

The compression fitting fastens anywhere along the armored line. This bulb style is well suited for insertion requirements in excess of 13½″. The B08 style is not a pressure tight connection. A thermowell is recommended for this style and for all bulb styles.

ARMOR STYLE

Style A1

AISI 302 stainless steel spring armor is supplied as standard. Originally designed for U.S. Navy Hi Shock thermometers.

TANK CAR THERMOMETER

Code XTK

Ashcroft's Duratemp® movementless design is well suited for severe vibration and shock applications as seen in railroad tank cars or other rolling stock apllications, such as milk, chemical and produce transportation.

The option XTK is available in a 8½″ case with a large adjustable pointer and a maximum indicating pointer. The range available is 20/240°F and the dial is marked "Tank Car Thermometer." The maximum indicating pointer illustrates the highest temperature sensed by the thermometer. Case size and pointer size makes the Duratemp easily read from a distance.

PRESSURE AND TEMPERATURE SWITCHES

Switch Selection Information..... 233-234
Additional Application Information... 235-236

PRESSURE, DIFFERENTIAL PRESSURE & TEMPERATURE SWITCHES

(Watertight construction for industrial applications. Explosion-proof construction for hazardous locations)

A-Series, Miniature Pressure, Watertight ... 237
A-Series, Miniature Pressure, Stainless Body, Explosion Proof 238
B400 B-Series, Pressure & Differential Pressure, Watertight..... 239
B400 B-Series, Temperature, Watertight.... 240
B700 B-Series, Pressure & Differential Pressure, Explosion-Proof 241
B700 B-Series, Temperature, Explosion-Proof Enclosure 242
F-Series, Pressure, Compact Explosion-Proof..... 243
G-Series, Pressure & Differential Pressure, Watertight Stainless Steel 244
G-Series, Temperature, Watertight Stainless Steel 245
H-Series, Pressure, Watertight..... 246
L-Series, Pressure & Differential Pressure, Watertight..... 247
L-Series, Temperature, Watertight 248
N-Series, Pressure, Electronic 249
N-Series, Pressure, Electronic with Indication..... 250
P-Series, Pressure & Differential Pressure, Explosion-Proof or Watertight . 251
P-Series, Temperature, Explosion-Proof or Watertight 252
Deadbands and Ranges, B-Series 253
Deadbands and Ranges, P-Series 254
Deadbands and Ranges, L- and G-Series 255
Options A, B, L, P, G, F, N, H Series..... 256-257
DDS Series Differential Pressure Switch Diaphragm Sensing Element..... 258

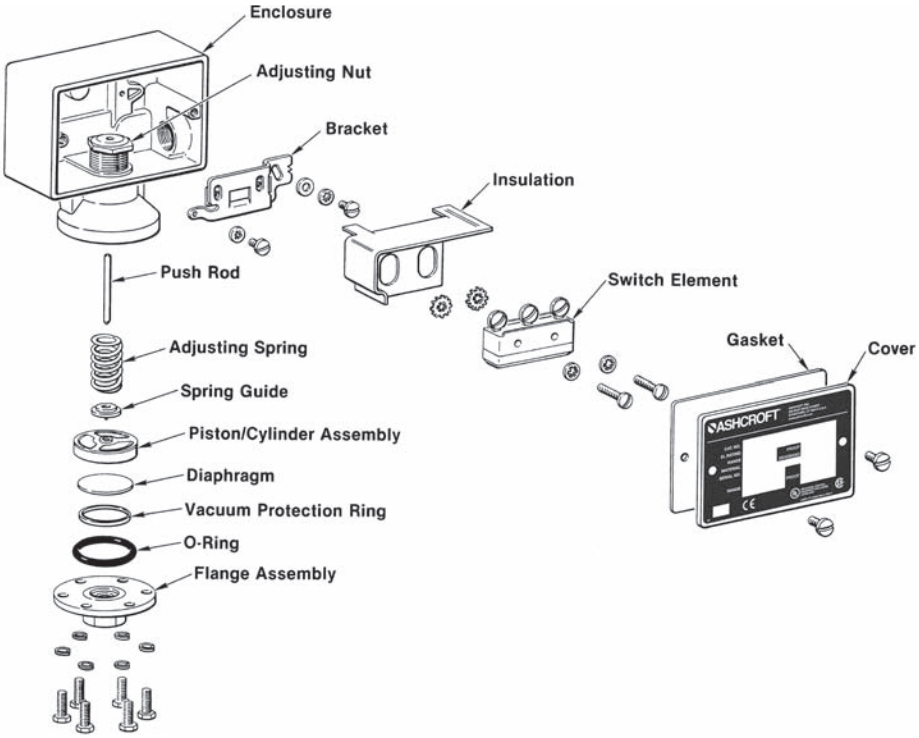

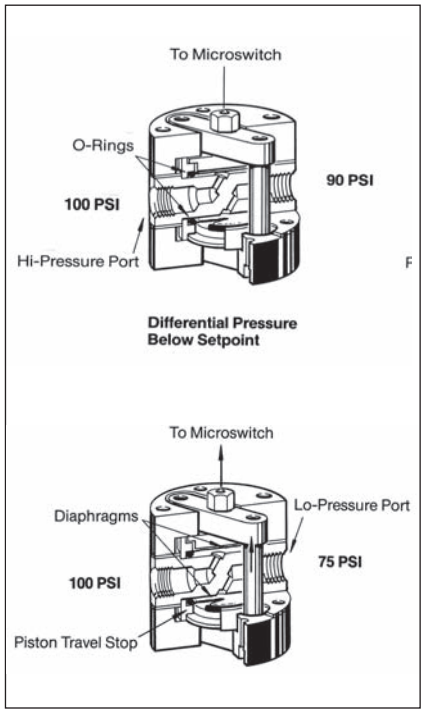

PRESSURE, TEMPERATURE AND DIFFERENTIAL PRESSURE SWITCH SELECTION

Before making your selection, consider the following:

1. Actuator

The actuator responds to changes in pressure, temperature or differential pressure and operates the switch element in response to these changes.

The actuator is normally exposed to process fluid and must therefore be chemically compatible with it. The following may be used to help select actuator type:

For nominal pressure ranges 0-15 psi through 0-3000 psi, the standard actuator is a diaphragm-sealed piston. In this actuator, process pressure acting on the piston area causes it to overcome the adjustment spring force and actuate a snap-action switch. A diaphragm and O-ring seal the process media from this mechanism. These are available in various materials, i.e.: Buna N, Teflon and Viton. The standard process connection is stainless steel. Optional monel pressure connection is available.

For ˝ H_2O Pressure and Differential Pressure Ranges, a diaphragm actuator is used. In this design, the standard pressure connections are carbon steel. Diaphragms are available in Viton, Buna N and Teflon. Always review process temperature limits before making seal selections. Optional stainless steel pressure connections are available (option XTA).

For High Differential Pressure Actuator Ranges, 3-15 to 60-600 psid, a Dual Diaphragm-Sealed Piston Actuator is used. This actuator is designed to for high static-pressure applications. The standard pressure connections are nickel-plated brass. Diaphragms are available in Viton, Buna N and Teflon. Always review process temperature limits before making seal selections. Optional stainless steel pressure connections are available (option XUD).

For all temperature ranges the standard Ashcroft® temperature actuator operates on the vapor pressure principle: the vapor pressure in a sealed thermal system is applied to a sensing element, which in turn actuates a switch. This is known as a SAMA Class II system. Various filling materials are used, including Propane, Butane, Methyl Alcohol, N Propyl Alcohol and Xylene. High overtemperature capability is possible with this type of system. The interface between liquid and vapor is the point at which sensing occurs. This is the "sensitive" portion of the bulb. Bulb extensions and capillary are normally filled with vapor, and have little effect on the setpoint, regardless of ambient temperature variations; therefore, no ambient compensation is required. For best results, the bulb should be mounted within 60 degrees of vertical to assure the liquid remains in the bulb.

2. Enclosure

The enclosure protects the switch element and mechanism from the environment and has provisions for mounting and wiring. All Ashcroft switch enclosures are epoxy-coated aluminum or stainless steel for maximum corrosion resistance. Choose between watertight NEMA 4, 4X for most industrial applications and explosion-proof NEMA 7/9 for most process applications.

Ashcroft enclosures include watertight cover gaskets, external mounting holes and one or two $^3/_4$ NPT electrical conduit holes for ease of installation. Pressure switches may also be mounted directly to the process by means of the standard $^1/_4$ NPTF or optional $^1/_2$ NPT pressure connection.

Note: When installing Ashcroft switches, refer to instruction sheets included with each switch, the National Electrical Code, and any other local codes or requirements to assure safety.

3. The Switching Function

Next, consider the switching function. Most applications for alarm and shutdown are satisfied by single setpoint, fixed deadband models. For high/low or alarm and shutdown, the dual setpoint models may be selected. For pump, compressor, level and other control applications, an adjustable deadband model is often the best choice.

4. The Switch Element

Finally, the electrical switching element must be compatible with the electrical load being switched. For ease of selection, all electrical

switching elements are snap acting, SPDT (single pole-double throw), or 2 (SPDT). Select a switch element with electrical rating that exceeds the electrical rating of the device being controlled by the switch. For better reliability and safety, optional Hermetically Sealed switching elements may be specified.

ADDITIONAL SWITCH TERMINOLOGY

Accuracy – (See repeatability) Accuracy normally refers to conformity of an indicated value to an accepted standard value. There is no indication in switch products; thus, instead, the term repeatability is used as the key performance measure. Ashcroft switch accuracy is 1% of nominal range.

Automatic Reset Switch – Switch which returns to normal state when actuating variable (Pressure or Temperature) is reduced.

Adjustable or Operating Range – That part of the nominal range over which the switch setpoint may be adjusted. Normally about 15% to 100% of the nominal range for pressure and differential pressure switches and the full span for temperature switches.

Burst Pressure – The maximum pressure that may be applied to a pressure switch without causing leakage or rupture. This is normally at least 400% of nominal range for Ashcroft switches. Switches subjected to pressures above the nominal range can be permanently damaged.

Deadband – The difference between the setpoint and the reset point, normally expressed in units of the actuating variable. Sometimes referred to as differential.

Division 1 – A National Electrical Code Classification of hazardous locations. In Division 1 locations, hazardous concentrations of flammable gases or vapors exist continuously, intermittently or periodically under normal conditions; frequently because of repair or maintenance operation/leakage or due to breakdown or faulty operation of equipment or processes which might also cause simultaneous failure of electrical equipment. Explosion-proof NEMA 7/9 enclosures are required in Division 1 locations.

Division 2 – A National Electrical Code Classification of Hazardous locations. In Division 2 hazardous locations, flammable or volatile liquid or flammable gases are handled, processed or used, but will normally be confined within closed containers or closed systems from which they can escape only in case of accidental rupture or breakdown or in case of abnormal operation of equipment. Either Nema 7/9 explosion-proof enclosures or any enclosure with hermetically sealed switch contacts may be used in Division 2 locations.

Explosion Proof – A term commonly used in industry referring to enclosures capable of withstanding an internal explosion of a specified gas without igniting surrounding gases. Strict installation practices in accordance with the national electrical code are also required for safety.

Fixed Deadband – The difference between the setpoint and the reset point of a pressure or temperature switch. It further signifies that this deadband is a fixed function of the pressure switch and not adjustable.

Hermetically Sealed Switch – A switch element whose contacts are completely sealed from the environment to provide additional safety and reliability. Contact arc cannot cause an explosion and atmospheric corrosive elements cannot affect the contacts.

Manual Reset Switch – Pressure or Temperature switch in which contacts remain actuated even after the actuating variable returns to normal. On Ashcroft manual reset switches, a button must be pushed to reset the contacts.

National Electrical Manufacturers Association (NEMA) – This group has defined several categories of enclosures, usually referred to as "types." Further, they designate certain features and capabilities each type must include. For example, among other features, a NEMA 4 enclosure must include a threaded conduit connector, external mounting provision and cover gaskets. When selecting a NEMA 4 enclosure from any manufacturer, a buyer is assured of receiving these features.

NEMA 4 – Watertight and dusttight enclosures intended for use indoors or outdoors to protect the equipment against splashing, falling or hose-directed water, external condensation and water seepage. They are also sleet-resistant.

NEMA 4X – Watertight, dusttight and corrosion-resistant enclosures with same qualifications as NEMA 4, but with added corrosion resistance.

NEMA 7 – Enclosures for indoor Class I, Division 1 hazardous locations with gas or vapor atmospheres.

NEMA 9 – Enclosures for indoor Class II, Division 1 hazardous locations with combustible dust atmospheres.

Normal Switch Position – Contact position before actuating pressure (or variable) is applied. Normally closed contacts open when the switch is actuated. Normally open contacts close when the switch is actuated.

Normally Closed – Refers to switch contacts that are closed in the normal switch state or position (unactuated). A pressure change opens the contacts.

Normally Open Switch – Refers to the contacts that are open in the normal switch state or position (unactuated). A pressure change closes the contacts.

Overpressure Rating(s) – A nonspecific term that could refer to either burst or proof pressure, or both.

Proof Pressure – The maximum pressure which may be applied without causing damage. This is determined under strict laboratory conditions including controlled rate of change and temperature: This value is for reference only. Consult factory for applications where switch must operate at pressures above nominal range or reference temperature (70°F).

Repeatability (Accuracy) – The closeness of agreement among a number of consecutive measurements of the output setpoint for the same value of the input under the same operating conditions, approaching from the same direction, for full-range traverses. Ashcroft switch repeatability is 1% of nominal range.

Note: It is usually measured as nonrepeatabil-ity and expressed as repeatability in percent of span or nominal range. It does not include hysteresis or deadband.

Reset Point – The reset point is the Pressure, Temperature or Differential Pressure Value where the electrical switch contacts will return to their original or normal position after the switch has activated.

Setpoint – The setpoint is the Pressure, Temperature or Differential Pressure value at which the electrical circuit of a switch will change state or actuate. It should be specified either on increase or decrease of that variable. (See also reset point.)

Single-Pole Double Throw (SPDT) Switching Element – A SPDT switching element has one normally open, one normally closed, and one common terminal. The switch can be wired with the circuit either normally open (N/O) or normally closed (N/C). SPDT is standard with most Ashcroft pressure and temperature switches.

Snap Action – In switch terminology, snap action generally refers to the action of contacts in the switch element. These contacts open and close quickly and snap closed with sufficient pressure to firmly establish an electrical circuit. The term distinguishes products from mercury bottle types that were subject to vibration problems.

Static Pressure – For differential pressure switches, static pressure refers to the lower of the two pressures applied to the actuator.

ASHCROFT®

Additional Pressure and Temperature Switch Application Information

DIFFICULT PROCESS MEDIA

When specifying pressure or temperature switches, the material in contact with media must be compatible with it. Otherwise, failure could occur, resulting in leakage, injury, loss of life, property or production. The user should review prior experience with materials of construction in the process for guidance in material selection. If this is not appropriate, contact Customer Service for assistance. Relevant information such as process media, concentration of each constituent, temperature, pressure, the presence of contaminants, particulate, vibration or pulsation is necessary to make the best recommendation.

Some applications are best handled by adding an Ashcroft diaphragm seal to isolate the fluid media from the pressure or differential pressure switch.

Diaphragm seals are recommended where:

- The process media being sensed could clog the pressure element.
- The process media temperature is above or below the ratings of the actuator seal materials.
- The application calls a for sanitary process connection.

Note: The addition of a diaphragm seal may increase the deadband and response time of the pressure switch to process pressure changes. Please consult Customer Service for details.

OXIDIZING MEDIA

When specifying a pressure switch for use in oxidizing media, such as chlorine, oxygen and several other chemical compounds, the wetted materials must be compatible with the media, and the switch should be cleaned for oxygen service. This is necessary to remove any residue that might react violently with the oxidizing media. Specify option X6B (clean for oxygen service).

STEAM SERVICE

In order to prevent live steam from coming into contact with the switch actuator, a siphon filled with water should be installed between the switch and the process line. We recommend the optional stainless steel welded process connection and diaphragm even though viton is rated for use with steam. Experience has shown that in many steam applications, the 300°F high temperature limit of viton is exceeded by steam under pressure.

In some boiler applications, a special U.L. listing, "MBPR", which requires unique features is needed. Ashcroft offers these features with option XG8.

NACE

NACE is the acronym for the National Associations of Corrosion Engineers. Their standard MRO175-93 titled "Sulfide Stress Cracking Resistant Metallic Materials for Oilfield Equipment," is cited when ordering instruments for oilfield applications involving sour oil or gas with traces of hydrogen sulfide. It is a legal requirement in many states. NACE instruments are also suitable for use in sewage treatment plants and other applications with traces of hydrogen sulfide in the process.

For high concentrations of hydrogen sulfide in a diaphragm seal should be used; a Tantalum diaphragm and Hastelloy C (C276) lower housing are recommended. For over 3% or 30,000ppm, a seal is essential.

HIGH TEMPERATURE PROCESS

Refer to the actuator seal table for process temperature limits for pressure switch actuators. Pressure switches mounted directly to the process can withstand up to 300°F when equipped with optional viton, stainless steel or monel wetted parts. If process temperature exceeds 300°F, four feet of ½˝ tubing between the process and the switch will generally protect the switch from damage.

Alternatively, an Ashcroft diaphragm seal, can be used to isolate the switch from the hot process.

VIBRATION

Generally, vibration will not harm Ashcroft pressure switches. However, premature tripping may occur under severe conditions. This tends to be annoying, but repeatable for a given situation and might be in the order of 5% to 10% of switch range from the setpoint, i.e. a 100 psi switch set at 50 psi on increasing pressure might trip somewhere between 40 and 45 psi on increasing pressure. This would not reduce the life of the pressure switch.
The best approach in this type of application is to mount the switch remotely, connecting the switch to the process or equipment with flexible tubing. If this is not possible, consider the use of the Belleville actuator, option XG3.

PULSATION

Pressure pulsation below the range of the pressure switch will not harm it. However, because the switch can react to pressure pulses less than one second duration, it might be desirable to include a dampening device. Several Ashcroft accessories, such as snubbers address this situation. Consult Customer Service for more information.

MOUNTING

All Ashcroft pressure, temperature and differential pressure switches with snap acting contacts may be mounted in any position. This includes the sensing bulbs of temperature switches. This is an important advantage of snap acting switch designs.

SWITCH ELEMENT SELECTION

B-Series switches are available with a wide variety of snap acting switch elements to meet most electrical requirements. The standard contact arrangement is single pole, double throw (SPDT). This includes both normally open and normally closed contacts. Standard contact material is fine silver which generally is suitable for switching 8 volts or more, up to the rating in the Switch Element Selection Table. When switching less than 8 volts, optional Gold Alloy contacts are recommended.

Optional Dual, or 2 SPDT contacts may be supplied in B-Series enclosures for applications requiring two switch functions at the same setpoint. These contacts are technically not double pole, double throw (DPDT). They are synchronized at the factory to actuate within 1% of nominal range of each other. For simultaneous actuation of 2 SPDT contacts, option XG3 should be ordered.

ASHCROFT®

Additional Pressure and Temperature Switch Application Information

INFORMATION & GUIDELINES FOR SETTING ASHCROFT PRESSURE, TEMPERATURE AND DIFFERENTIAL PRESSURE SWITCHES

All Ashcroft pressure, temperature and differential pressure switches can be set at any point between about 15% and 100% of the range as designated on the label or the nominal range table.

Ashcroft pressure and temperature switches can be either set in the field or ordered from the factory preset to your requirements. When set at the factory, the specification is ±1% of the nominal range.

Factory setting, or XFS, is a very popular option, and as a result, we often get orders that do not have enough information or have incorrect information.

HOW TO ORDER

When "XFS" is desired:

1. Setpoint must be indicated.
2. Increasing or decreasing pressure must be indicated.

   Ex: B424B XFS 100#
   Set: 60# decreasing
3. For differential pressure switches, static operating pressure must be given also.

HAZARDOUS LOCATIONS

a. Division I.
Ashcroft 700 series or other explosion proof enclosures are required to meet the requirements of Division I Hazardous Locations as defined by the National Electrical Code.

b. Division II.
These enclosures also meet the less stringent requirements for Division II Hazardous Locations. Alternatively, Ashcroft 400 series or other watertight enclosures, with hermetically sealed switch elements are approved for use in Division II hazardous locations.

c. Intrinsic Safety.
Any Ashcroft pressure or temperature switch may be used with an approved barrier in most intrinsically safe systems. These switches do not create or store energy and are therefore designated "simple devices" in these systems.
Exception: Ashcroft N series electronic pressure switches require power and may not be suitable for use in all intrinsically safe systems.

c. ATEX.
ATEX is a European designation that deals with standards for equipment and protective systems intended for use in potentially explosive atmospheres. This approval is required for switches intended for use in hazardous locations, especially important to OEMs who export to Europe and contractors specifying or purchasing products for European applications.

Ashcroft is the leader in providing pressure and temperature switches for alarm, shutdown and control in hazardous locations.

Models are available with single or dual setpoints, fixed or adjustable deadbands.

Choose from standard, miniature or compact enclosures, construction of epoxy coated aluminum or stainless steel.

ASHCROFT®

Miniature Pressure Switches, Watertight Stainless Steel Body, A-Series

- ***Wide variety of electrical connections including wire leads, spade and DIN connectors***
- ***316L stainless steel body sealed for environmental protection***
- ***Precision snap-acting switch element***
- ***Choice of field-adjustable or factory set only***
- ***UL and CSA listed CRN, RoHS***
- ***SIL 3 capable***

The Ashcroft® A-Series pressure switches are designed for tough industrial and OEM applications requiring a durable, high-quality miniature switch.

Ideal for pressure alarm, shutdown, or control on heavy vehicles, machine tools, electronic equipment, engines, compressors, and wherever size is a consideration or equipment is being downsized.

1 - FUNCTION

APS - Pressure switch, single setpoint, fixed deadband, factory set, not field adjustable
APA - Pressure switch, single setpoint, fixed deadband, field adjustable

2 - BODY (ENCLOSURE)

N4 - Watertight 316 stainless steel body

3 - MICRO SWITCH, FIRST CHARACTER

Code	
1	Single Switch – SPDT
2	Dual Switch – DPDT (not available with "S" actuator) with <100 psi range

3 - MICRO SWITCH, SECOND CHARACTER

Code		
G	Gold Contact –	0.1A @ 125 Vac, 0.1A @ 30 Vdc
H	Higher Current –	5A @ 125/250 Vac, 5A @ 28 Vdc resistive, 3A @ 28 Vdc inductive
L	Higher Current Gold Contacts –	1A @ 125 Vac, 1A @ 28 Vdc resistive, 0.5A @ 28 Vdc inductive
P	General Purpose –	3A @ 125/250 Vac, 2A @ 30 Vdc

4 - ELECTRIC CONNECTION

Code	
012C‡	½ NPT male conduit connction with 3-18 AWG wires 12″ length
000H	Micro DIN Connector – Watertight DIN 43650 FORM C cable socket with mating connector, not available with DPDT switching
00MH	Micro DIN Connector – Watertight DIN 43650 FORM C cable socket with mating connector, not available with DPDT switching
012L‡	Wire leads, 3-18 AWG PVC insulated wires 12″ length
000N	Nonstandard, customer specified see # variation
000T	Spade terminals, 4 – 0.187″ male spade, not available with DPDT switching

5 - ACTUATOR SEAL

Code	
B	316 SS piston & Buna O-ring, ranges ≥100 psi
V	316 SS piston & Viton O-ring, ranges ≥100 psi
S	316 SS welded diaphragm, ranges ≤200 psi

‡ First three digits represent the length of the wire leads in inches. 012, 024, 048 & 072 are standard available lengths. Consult factory for custom length availability.

6 - PRESSURE CONNECTION CODE

Code	Description
01	⅛ NPT Male
02	¼ NPT Male
03	⅛ NPT Female*
25	¼ NPT Female*
05	7/16-20 SAE Male
06	VCR Fixed*
07	VCO Fixed*
12	G¼A (Type E Stud End)
13	G¼B
75	0.75″ Tri-Clamp® connection (includes 3A Approval)†
15	1.5″ Tri-Clamp® connection (includes 3A Approval)†
20	2.0″ Tri-Clamp® connection (includes 3A Approval)†

7 - PRESSURE RANGE

Actuator	psi	Bar	kPa	Kg/cm²
S	–15/15#	–1/1BR	–100/100KP	–1/1KSC
S	30#	2BR	200KP	2KSC
S	60#	4BR	400KP	4KSC
B,S,V	100#	7BR	700KP	7KSC
B,S,V	200#	14BR	1400KP	14KSC
B,V	500#	35BR	3500KP	35KSC
B,V	1000#	70BR	7000KP	70KSC
B,V	2000#	140BR	14000KP	140KSC
B,V	5000#	350BR	35000KP	350KSC
B,V	7500#	500BR	50000KP	500KSC

8 - SETPOINT

5 characters maximum representing setpoint of the switch in the same units as the range of the switch. For setpoints in Vacuum specify as "–" pressure.

9 - SETPOINT DIRECTION

Code	Description
R	Rising Pressure (Increasing Pressure)
D	Decreasing Pressure

10 - OPTIONS

Code	Description
XC4	Individual certified calibration chart
XFP	Fungus proofing
XMQ	Positive material identification (75, 15 & 20 process conn. only)
XNC	2 wire leads plus ground wire – wired for normally closed operation
XNO	2 wire leads plus ground wire – wired for normally open operation
XNH	Stainless Steel tag
XNN	Paper tag
X6B	Cleaned for oxygen service
XGO	Ground Wire Omitted

Pressure Connection Notes:
*Available with "S" activator only.
†Ranges ≤500 psi.

Setpoint Notes:
If no setpoint is required on an APA switch use either "NSR" or "NSD". If direction is not known use "NSR" as the default.

Option Notes:
The X character will only appear before the first option, additional options will just be the two characters.
Example: XC4NC6B
If the switch is mounted to a diaphragm seal other than (75, 15, 20 connection) the seal fill fluid is also listed as an X option.

TO ORDER THIS A-SERIES PRESSURE SWITCH:

Select: APS N4 1H 012C S 02 30# - 15 R - X6B

1. Function: APS
2. Enclosure: N4
3. Micro Switch: 1H
4. Electrical Connection: 012C
5. Actuator Seal: S
6. Pressure Connection: 02
7. Pressure Range: 30#
8. Setpoint: 15
9. Setpoint Direction: R
10. Options: X6B

Consult factory for guidance in product selection
Phone (203) 378-8281 or visit our web site at www.ashcroft.com

ASHCROFT®

Miniature Pressure Switches, Explosion-Proof Stainless Steel Body, A-Series

- ***316L stainless steel body sealed for environmental protection***
- ***Precision snap-acting switch element***
- ***Choice of field-adjustable or factory-adjusted to setpoint requirements***
- ***UL, FM and CSA listed***
- ***ATEX & IECEX Explosion proof, flame proof***
- ***Dual seal rated; CRN, CE, RoHS***
- ***SIL 3 capable***

The Ashcroft® A-Series pressure switches are designed for tough industrial and OEM applications requiring a durable, high-quality miniature switch.

Ideal for pressure alarm, shutdown, or control on heavy vehicles, machine tools, electronic equipment, engines, compressors, and wherever size is a consideration or equipment is being downsized.

IN A RUSH? ASK FOR ASHCROFT GOLD SERVICE

CE LOOK FOR THIS AGENCY MARK ON OUR PRODUCTS

1 - FUNCTION

APS - Pressure switch, single setpoint, fixed deadband, factory set, not field adjustable

APA - Pressure switch, single setpoint, fixed deadband, field adjustable

2 - BODY (ENCLOSURE)

N7 - Explosion proof 316 stainless steel body

3 - MICRO SWITCH, FIRST CHARACTER

Code	
1	Single Switch – SPDT
2	Dual Switch – DPDT (not available with "S" actuator or P&G micro switch)

3 - MICRO SWITCH, SECOND CHARACTER

Code		
G	Gold Contact –	0.1A @ 125 Vac, 0.1A @ 30 Vdc
H	Higher Current –	5A @ 125/250 Vac, 5A @ 28 Vdc resistive, 3A @ 28 Vdc inductive
L	Higher Current Gold Contacts –	1A @ 125 Vac, 1A @ 28 Vdc resistive, 0.5A @ 28 Vdc inductive
P	General Purpose –	3A @ 125/250 Vac, 2A @ 30 Vdc

4 - ELECTRIC CONNECTION

Code	
012C‡	½ NPT male conduit connction with 3-18 AWG wires 12″ length

5 - ACTUATOR SEAL

Code	
B	316 SS piston & Buna O-ring, ranges ≥100 psi
V	316 SS piston & Viton O-ring, ranges ≥100 psi
S	316 SS welded diaphragm, ranges ≤200 psi

‡ First three digits represent the length of the wire leads in inches. 012, 024, 048 & 072 are standard available lengths. Consult factory for custom length availability.

6 - PRESSURE CONNECTION CODE

Code	Description
01	⅛ NPT Male
02	¼ NPT Male
03	⅛ NPT Female*
25	¼ NPT Female*
05	7/16-20 SAE Male
06	VCR Fixed*
07	VCO Fixed*
12	G¼A (Type E Stud End)
13	G¼B
75	0.75″ Tri-Clamp® connection (includes 3A Approval)†
15	1.5″ Tri-Clamp® connection (includes 3A Approval)†
20	2.0″ Tri-Clamp® connection (includes 3A Approval)†

7 - PRESSURE RANGE

Actuator	psi	Bar	kPa	Kg/cm²
S	–15/15#	–1/1BR	–100/100KP	–1/1KSC
S	30#	2BR	200KP	2KSC
S	60#	4BR	400KP	4KSC
B,S,V	100#	7BR	700KP	7KSC
B,S,V	200#	14BR	1400KP	14KSC
B,V	500#	35BR	3500KP	35KSC
B,V	1000#	70BR	7000KP	70KSC
B,V	2000#	140BR	14000KP	140KSC
B,V	5000#	350BR	35000KP	350KSC
B,V	7500#	500BR	50000KP	500KSC

8 - SETPOINT

5 characters maximum representing setpoint of the switch in the same units as the range of the switch. For setpoints in Vacuum specify as "–" pressure.

9 - SETPOINT DIRECTION

Code	Description
R	Rising Pressure (Increasing Pressure)
D	Decreasing Pressure

10 - OPTIONS

Code	Description
XC4	Individual certified calibration chart
XFP	Fungus proofing
XMQ	Positive material identification (75, 15 & 20 process conn. only)
XNC	2 wire leads plus ground wire – wired for normally closed operation
XNO	2 wire leads plus ground wire – wired for normally open operation
XNH	Stainless Steel tag
XNN	Paper tag
X6B	Cleaned for oxygen service
XGO	Ground Wire Omitted

Pressure Connection Notes:
*Available with "S" activator only.
†Ranges ≤500 psi.

Setpoint Notes:
If no setpoint is required on an APA switch use either "NSR" or "NSD". If direction is not known use "NSR" as the default.

Option Notes:
The X character will only appear before the first option, additional options will just be the two characters.
Example: XC4NC6B

If the switch is mounted to a diaphragm seal the seal fill fluid is glycerin standard.

TO ORDER THIS A-SERIES PRESSURE SWITCH:

Select: APS N7 1H 012C S 02 30# - 15 R - X6B

1. Function: APS
2. Enclosure: N7
3. Micro Switch: 1H
4. Electrical Connection: 012C
5. Actuator Seal: S
6. Pressure Connection: 02
7. Pressure Range: 30#
8. Setpoint: 15
9. Setpoint Direction: R
10. Options: X6B

Consult factory for guidance in product selection
Phone (203) 378-8281 or visit our web site at www.ashcroft.com

ASHCROFT®

Pressure and Differential Pressure Switches, Watertight Enclosure, Type 400, B-Series

This general purpose Ashcroft® switch series is ideal for use in virtually all Industrial and OEM applications.

- ***Watertight NEMA 4X enclosure, IP66***
- ***Choice of switch elements for all applications, including hermetically sealed***
- ***Wide choice of wetted materials, including all-welded Monel or stainless steel***
- ***Fixed or limited adjustable deadband***
- ***Approved for UL, CSA and FM[8] ratings***
- ***Setpoints adjustable from 15-100% of range***
- ***Choice of actuators, including designs for fire-safe and NACE applications[8]***
- ***Readily available***
- ***Standard pressure connection materials:***

  Pressure psi ranges
  - 316L stainless steel

  Differential psid ranges
  - Nickel-plated brass[9]

  Pressure and differential inches of water ranges
  - Epoxy coated carbon steel

1 - ENCLOSURE

B4 - Pressure switch, type 400, watertight enclosure meets NEMA 3, 4, 4X and 13, IP66 requirements

D4 - Differential pressure switch, type 400, watertight enclosure meets NEMA 3, 4, 4X and 13, IP66 requirements

2 - SWITCH ELEMENTS

Order Code	Description/Maximum Electrical Ratings UL/CSA Listed SPDT	
20[4]	Narrow deadband	15A, 125/250 Vac
21[9]	Ammonia service	5A, 125/250 Vac
22[3]	Hermetically sealed switch, narrow deadband	5A, 125/250 Vac
23	Heavy duty ac	20A,125/250 Vac
24[1]	General purpose	15A,125/250/480 Vac 1/2A, 125 Vdc 1/4A, 250 Vdc
25	Heavy duty dc	10A,125/ Vac or dc 1/8HP 125/ Vac or dc
26[4]	Sealed environment proof	15A, 125/250 Vac
27	High temp. 300°F	15A, 125/250 Vac
28	Manual reset trip on nocreasing	15A, 125/250 Vac
29	Manual reset trip on decreasing	15A, 125/250 Vac
31	Low level (gold) contacts	1A,125/250 Vac
32	Hermetically sealed switch, general purpose	11A, 125/250 Vac 5A, 30 Vdc
50	Variable deadband	15A,125/250 Vac
	UL/CSA Listed Dual SPDT[2]	
61[4]	Dual narrow deadband	15A, 125/250 Vac
62[4]	Dual narrow environment proof	15A, 125/250 Vac
63	Dual high temp. 300°F	15A, 125/250 Vac
64	Dual general purpose	15A, 125/250/480 Vac 1/2A, 125 Vdc 1/4A, 250 Vdc
65	Dual ammonia service	5A, 125/250/480

3 - ACTUATOR SEAL[7]

Code & Material	Process Temp.[6] Limits °F	Range			
		Vac in.H_2O	0-600 psi	1000 psi	2000-3000 psi
B-Buna N	0 to 150	●	●	●	●
V-Viton	20 to 300	●	●	●	
T-Teflon	0 to 150	●	●	●	●
S-SS[5][10]	0 to 300		●	●	
P-Monel[5][10]	0 to 300		●	●	

4 - OPTIONS

(See pages 256-257)

5 - STANDARD PRESSURE RANGES

(See page 253)

NOTES:

1. Standard switch.
2. Dual switches are 2 SPDT snap-action switches not independently adjustable.
3. Estimated dc rating, 2.5A, 28 Vdc (not UL listed).
4. Estimated dc rating, .4A, 120 Vdc (not UL listed).
5. Available on pressure only.
6. Ambient operating temperature limits –20 to 150°F, all styles. Setpoint shift of ±1% of range per 50°F is normal. Switch calibrated at 70°F reference.
7. Items are wetted by process fluid.
8. Refer to Option Table.
9. Order Option XUD, stainless steel process connection.
10. On differential switches, stainless steel is available in 15, 30, 60 and 90 psid ranges only. Includes Teflon O-ring and 316 SS connection.

HERMETICALLY SEALED SWITCH

We recommend hermetically sealed switch elements for improved reliability. The hermetically sealed switch provides uncompromising contact protection in harsh or corrosive environments. The Ashcroft 400 Series is also approved for installation in Division II hazardous areas when supplied with hermetically sealed contacts.

Features:
- UL-recognized component, guide WSQ2, File E85076
- All-stainless steel welded construction

TO ORDER THIS B-SERIES PRESSURE SWITCH:

Select: **B4 20 B XPK 600#**

1. Enclosure: B4
2. Switch Element: 20
3. Actuator Seal: B
4. Options (See pages 256-257): XPK
5. Pressure Range (See page 253): 600#

Consult factory for guidance in product selection
Phone (203) 378-8281 or visit our web site at www.ashcroft.com

ASHCROFT®

Temperature Switches Watertight Enclosure, Type 400, B-Series

This broad Ashcroft® switch series is easy to use and readily retrofits to virtually all process, industrial and OEM applications.

- ***Watertight NEMA 4X, IP66 enclosure***
- ***Choice of switch elements for all applications, including hermetically sealed (NEMA 4 meets Class I, Div. 2, Groups A, B, C, & D with hermetically sealed switch)***
- ***UL, CSA listings standard***
- ***Setpoints adjustable from 15-100% of range***
- ***Wetted material is all-welded stainless steel***
- ***Fixed or limited adjustable deadband***
- ***Readily available***

IN A RUSH? ASK FOR ASHCROFT GOLD SERVICE

1 - ENCLOSURE

T4 - Temperature switch, type 400, watertight enclosure meets NEMA 3, 4, 4X and 13, IP66 requirements

2 - SWITCH ELEMENTS

Order Code	Description/Maximum Electrical Ratings UL/CSA Listed SPDT	
20[4]	Narrow deadband	15A, 125/250 Vac
21[7]	Ammonia service	5A, 125/250 Vac
22[3]	Hermetically sealed switch, narrow deadband	5A, 125/250 Vac
23	Heavy duty ac	20A,125/250 Vac
24[1]	General purpose	15A,125/250/480 Vac 1/2A, 125 Vdc 1/4A, 250 Vdc
25	Heavy duty dc	10A,125/ Vac or dc 1/8HP 125/ Vac or dc
26[4]	Sealed environment proof	15A, 125/250 Vac
27	High temp. 300°F	15A, 125/250 Vac
28	Manual reset trip on increasing	15A, 125/250 Vac
29	Manual reset trip on decreasing	15A, 125/250 Vac
31	Low level (gold) contacts	1A,125/250 Vac
32	Hermetically sealed switch, general purpose	11A, 125/250 Vac 5A, 30 Vdc
50	Variable deadband	15A,125/250 Vac
	UL/CSA Listed Dual SPDT[2]	
61[4]	Dual narrow deadband	15A, 125/250 Vac
62[4]	Dual narrow environment proof	15A, 125/250 Vac
63	Dual high temp. 300°F	15A, 125/250 Vac
64	Dual general purpose	15A, 125/250/480 Vac 1/2A, 125 Vdc 1/4A, 250 Vdc
65 [7]	Dual ammonia service	5A, 125/250/480

3 - THERMAL SYSTEM SELECTION[5]

DIRECT MOUNT

Order Code	System Material	Style
TS	316 stainless steel	Rigid

REMOTE MOUNT

Order Code	System Material	Line Length	Style
T05	316 stainless steel	5′	Capillary with 302 SS Spring Armor
T10	316 stainless steel	10′	
T15	316 stainless steel	15′	
T20	316 stainless steel	20′	
T25	316 stainless steel	25′	

4 - BULB LENGTH SELECTION[6]

DIRECT MOUNT

Order Code	"S" Dimension	Minimum Thermowell "U" Dimension
027	2¾″	—
040	4″	2½″
060	6″	4½″
090	9″	7½″
120	12″	10½″
	REMOTE MOUNT	
030	3″	2½″

5 - OPTIONS

See pages 256-257

6 - STANDARD TEMPERTATURE RANGES

See page 253

NOTES:

1. Standard switch.
2. Dual switches are 2 SPDT snap-action switches not independently adjustable.
3. Estimated dc rating, 2.5A, 28 Vdc (not UL listed).
4. Estimated dc rating, 0.4A, 120 Vdc (not UL listed).
5. Additional line lengths available, call factory.
6. Additional bulb lengths available, call factory.
7. Not UL listed

Switches calibrated at 70°F ambient reference.

HERMETICALLY SEALED SWITCH

We recommend hermetically sealed switch elements for improved reliability. The hermetically sealed switch provides uncompromising contact protection in harsh or corrosive environments. The Ashcroft 400 Series is also approved for installation in Division II hazardous areas when supplied with hermetically sealed contacts.

Features:
- UL-recognized component, guide WSQ2, File E85076
- All-stainless steel welded construction

TO ORDER THIS B-SERIES TEMPERATURE SWITCH:

Select:	T4	20	T05	030	XNH	150° to 260°F
1. Enclosure:						
2. Switch Element:						
3. Thermal System:						
4. Bulb Length:						
5. Options (see pages 256-257):						
6. Temperature Range (see page 253):						

Consult factory for guidance in product selection
Phone (203) 378-8281 or visit our web site at www.ashcroft.com

ASHCROFT®

Pressure and Differential Pressure Switches, Explosion-Proof Enclosure, Type 700, B-Series

This broad Ashcroft® switch series is ideal for use in virtually all process and industrial applications.

- ***Explosion-proof NEMA 7/9, IP66 enclosure (explosion-proof enclosure Class I, Div. 1 & 2, Groups B, C, & D and Class II, Div. 1 & 2, Groups E, F & G)***
- ***Choice of switch elements for all applications, including hermetically sealed***
- ***Wide choice of wetted materials, including all-welded Monel or stainless steel***
- ***Fixed or limited adjustable deadband***
- ***UL listed***
- ***Various actuators available***
- ***Belleville actuator[8]***
- ***Readily available***
- ***Standard pressure connection materials:***
  - ***Pressure psi ranges - 316L SS***
  - ***Differential psid ranges - Nickel plated brass[9]***
  - ***Pressure and differential inches of water ranges - Epoxy coated carbon steel***
- ***ATEX models available[8]***
- ***IECEx models available[10]***
- ***CSA models available[8]***
- ***FM models available[8]***
- ***Setpoints adjustable from 15-100% of range***
- ***Dual Seal Rating models available[8]***

LOOK FOR THIS AGENCY MARK ON OUR PRODUCTS

ATEX model shown

IN A RUSH? ASK FOR ASHCROFT GOLD SERVICE

1 - ENCLOSURE

B7 - Pressure switch, type 700, explosion-proof enclosure meets Div.1 & 2, NEMA 7/9, IP66 requirements

D7 - Differential pressure switch, type 700, explosion-proof enclosure meets Div. 1 & 2, NEMA 7/9, IP66 requirements

2 - SWITCH ELEMENTS

Order Code	Description/Maximum Electrical Ratings UL/CSA Listed SPDT	
20[4]	Narrow deadband	15A, 125/250 Vac
21[9]	Ammonia service	5A, 125/250 Vac
22[3]	Hermetically sealed switch, narrow deadband	5A, 125/250 Vac
23	Heavy duty ac	20A,125/250 Vac
24[1]	General purpose	15A,125/250/480 Vac 1/2A, 125 Vdc 1/4A, 250 Vdc
25	Heavy duty dc	10A,125/ Vac or dc 1/8HP 125/ Vac or dc
26[4]	Sealed environment proof	15A, 125/250 Vac
27	High temp. 300°F	15A, 125/250 Vac
31	Low level (gold) contacts	1A,125/250 Vac
32	Hermetically sealed switch, general purpose	11A, 125/250 Vac 5A, 30 Vdc
50	Variable deadband	15A,125/250 Vac
	UL/CSA Listed Dual SPDT[2]	
61[4]	Dual narrow deadband	15A, 125/250 Vac
62[4]	Dual narrow environment proof	15A, 125/250 Vac
63	Dual high temp. 300°F	15A, 125/250 Vac
64	Dual general purpose	15A, 125/250/480 Vac 1/2A, 125 Vdc 1/4A, 250 Vdc
65	Dual ammonia service	5A,125/250/480 Vac
67[3]	Hermetically sealed switch, narrow deadband	5A, 125/250 Vac
68	Dual hermetically sealed switch, general purpose	11A,125/250 Vac 5A, 30 Vdc

3 - ACTUATOR SEAL[7]

Code & Material	Process Temp.[6] Limits °F	Range			
		Vac in.H_2O	0-600 psi	1000 psi	2000-3000 psi
B-Buna N	0 to 150	●	●	●	●
V-Viton	20 to 300	●	●	●	
T-Teflon	0 to 150	●	●	●	●
S-SS[5][10]	0 to 300		●	●	
P-Monel[5]	0 to 300		●	●	

4 - OPTIONS

(See pages 256-257)

5 - STANDARD PRESSURE RANGES

(See page 253)

NOTES:

1. Standard switch.
2. Dual switches are 2 SPDT snap-action switches not independently adjustable.
3. Estimated dc rating, 2.5A, 28 Vdc (not UL listed).
4. Estimated dc rating, .4A, 120 Vdc (not UL listed).
5. Available on pressure only.
6. Ambient operating temperature limits –20 to 150°F, all styles. Setpoint shift of ±1% of range per 50°F is normal. Switch calibrated at 70°F reference.
7. Items are wetted by process fluid.
8. Refer to Option Table.
9. Order Option XUD, stainless steel process connection.
10. On differential switches, stainless steel is available in 15, 30, 60 and 90 psid ranges only. Includes Teflon O-ring and 316 SS connection.

ATEX APPROVAL FOR HAZARDOUS LOCATIONS

ATEX is a European designation that deals with standards for equipment and protective systems intended for use in potentially explosive atmospheres. This approval is required for switches intended for use in hazardous locations, especially important to OEMs who export to Europe and contractors specifying or purchasing products for European applications. XCN option adds special features to Ashcroft 700-Series switch enclosures that meet the requirements for the highest levels of security and danger, such as:

- Special locking device requiring an Allen wrench to remove cover
- Special vents that blow out should the diaphragm rupture, thus preventing pressure build-up in the enclosure
- Special conduit plug requiring an Allen wrench for removal
- Available on pressure, temperature and differential pressure models
- Meets Explosion Class EEx d IIC T6

LOOK FOR THIS AGENCY MARK ON OUR PRODUCTS

TO ORDER THIS B-SERIES PRESSURE SWITCH:

Select: B7 20 B X06 600#

1. Enclosure: B7
2. Switch Element: 20
3. Actuator Seal: B
4. Options (see pages 256-257): X06
5. Pressure Range (see page 253): 600#

Consult factory for guidance in product selection
Phone (203) 378-8281 or visit our web site at www.ashcroft.com

ASHCROFT®

Temperature Switches Explosion-Proof Enclosure, Type 700, B-Series

This broad Ashcroft® switch series ideal for use in virtually all process, industrial and OEM applications.

- ***Explosion-proof NEMA 7/9, IP66 enclosures***
- ***Choice of switch elements for all applications, including hermetically sealed***
- ***Fixed or limited adjustable deadband***
- ***Readily available***
- ***UL listings standard***
- ***CSA listings available(7)***
- ***ATEX models available(7)***
- ***Setpoints adjustable from 15-100% of range***
- ***IECEx models available(7)***

1 - ENCLOSURE

T7 - Temperature switch, type 700, explosion proof enclosure meets Div. 1 & 2, NEMA 7/9, IP66 requirements

2 - SWITCH ELEMENTS

Order Code	Description/Maximum Electrical Ratings UL/CSA Listed SPDT	
20(4)	Narrow deadband	15A, 125/250 Vac
21	Ammonia service	5A, 125/250 Vac
22(3)	Hermetically sealed switch, narrow deadband	5A, 125/250 Vac
23	Heavy duty ac	20A,125/250 Vac
24(1)	General purpose	15A,125/250/480 Vac 1/2A, 125 Vdc 1/4A, 250 Vdc
25	Heavy duty dc	10A,125/ Vac or dc 1/8HP 125/ Vac or dc
26(4)	Sealed environment proof	15A, 125/250 Vac
27	High temp. 300°F	15A, 125/250 Vac
31	Low level (gold) contacts	1A,125/250 Vac
32	Hermetically sealed switch, general purpose	11A, 125/250 Vac 5A, 30 Vdc
50	Variable deadband	15A,125/250 Vac
	UL/CSA Listed Dual SPDT(2)	
61(4)	Dual narrow deadband	15A, 125/250 Vac
62(4)	Dual narrow environment proof	15A, 125/250 Vac
63	Dual high temp. 300°F	15A, 125/250 Vac
64	Dual general purpose	15A, 125/250/480 Vac 1/2A, 125 Vdc 1/4A, 250 Vdc
65	Dual ammonia service	5A, 125/250/480
67(3)	Hermetically sealed switch, narrow deadband	5A, 125/250 Vac
68	Dual hermetically sealed switch, general purpose	11A,125/250 Vac 5A, 30 Vdc

3 - THERMAL SYSTEM SELECTION(5)

DIRECT MOUNT

Order Code	System Material	Style
TS	316 stainless steel	Rigid

REMOTE MOUNT

Order Code	System Material	Line Length	Style
T05	316 stainless steel	5´	Capillary with 302 SS Spring Armor
T10	316 stainless steel	10´	
T15	316 stainless steel	15´	
T20	316 stainless steel	20´	
T25	316 stainless steel	25´	

4 - BULB LENGTH SELECTION(6)

DIRECT MOUNT

Order Code	"S" Dimension	Minimum Thermowell "U" Dimension
027	2¾″	—
040	4″	2½″
060	6″	4½″
090	9″	7½″
120	12″	10½″

REMOTE MOUNT

030	3″	2½″

5 - OPTIONS

See pages 256-257

6 - STANDARD TEMPERTATURE RANGES

See page 253

NOTES:

1. Standard switch.
2. Dual switches are 2 SPDT snap-action switches not independently adjustable.
3. Estimated dc rating, 2.5A, 28 Vdc (not UL listed).
4. Estimated dc rating, 0.4A, 120 Vdc (not UL listed).
5. Additional line lengths available, call factory.
6. Additional bulb lengths available, call factory.
7. Refer to Options Table.
   Switches calibrated at 70°F ambient reference.

HERMETICALLY SEALED SWITCH

We recommend hermetically sealed switch elements for improved reliability. The hermetically sealed switch provides uncompromising contact protection in harsh or corrosive environments.

Features:
- UL-recognized component, guide WSQ2, File E85076
- All-stainless steel welded construction

TO ORDER THIS B-SERIES TEMPERATURE SWITCH:

Select: **T7 20 T05 030 XNH 150° to 260°F**

1. Enclosure: T7
2. Switch Element: 20
3. Thermal System: T05
4. Bulb Length: 030
5. Options (see pages 256-257): XNH
6. Temperature Range (see page 253): 150° to 260°F

Consult factory for guidance in product selection
Phone (203) 378-8281 or visit our web site at www.ashcroft.com

ASHCROFT®

Compact Pressure Switch
Explosion-Proof Body
F-Series

Special features:

- ***Diaphragm-sealed piston actuator for long, reliable service***
- ***Choice of wetted materials and pressure connections for all applications***
- ***Watertight anodized aluminum body for environmental protection***
- ***Hermetically sealed snap-acting switch element***
- ***Field adjustable***
- ***Standard ½ NPT Male electrical conduit connection***
- ***Factory sealed leads***
- ***Directly interchangeable with many similar models for convenience***
- ***UL and CSA listed standard***
- ***Setpoints adjustble from 15-100% of range. Exception: stainless steel welded (codes) adjustable from 20-100%***

Ideal for pressure alarm, shutdown, control on:

- ***Engines and compressors***
- ***Process applications***
- ***Offshore applications***
- ***Panels***
- ***Pipelines***
- ***Hazardous locations***
- ***Corrosive environments***
- ***Machine tools***
- ***Replacement and retrofit***
- ***Where size is a consideration or equipment is being downsized***

1 - FUNCTION

FPS - Pressure switch, single setpoint, fixed deadband, field adjustable

2 - ENCLOSURE (BODY)

N7 - NEMA 3, 4, 7 & 9, IP66
Anodized aluminum for hazardous locations

3 - SWITCH ELEMENT CODE

Code	SPDT Switch Elements UL/CSA Listed	
P	Hermetically Sealed, Narrow Deadband	5A, 125/250 Vac
J	Hermetically Sealed, General Purpose	11A, 125/250 Vac 5A, 30 Vdc
L	Hermetically Sealed, Gold Contacts	1A, 125 Vac

4 - ACTUATOR SEAL

Code	Material	Proc. Temp. Limits (°F)
B	Buna N	0-150
V	Viton	20-200
T	Teflon	0-150
R	SS Diaphragm/Viton O-Ring	0-150
S	316 SS Welded	0-200
H	SS Piston/Viton O-Ring	20-200

5 - PRESSURE CONNECTION

Code	Description
25	¼ NPT Female
07	½ NPT Female (Standard)

6 - F-SERIES OPTIONS

Code	Description
XFP	Fungus proofing
XFS	Factory adjusted setpoint
XK3	Terminal blocks
XNH	Tagging stainless steel
X6B	Cleaned for oxygen service

7A - NOMINAL RANGE & PERFORMANCE TABLE – BUNA (CODE B)

Nominal Range		Proof Pressure	Deadband (by Switch Element)	
psi	bar	psi	Code J	Code P,L
30 in.Hg Vac.†	–1	1000	1.8-8.0	0.4-5.0
30	2	1000	0.2-1.5	0.1-1.3
60	4	1000	0.2-2.5	0.3-1.5
100	7	1000	0.5-4.0	0.5-2.5
200	14	1000	1.5-8.0	0.5-5.0
400	28	1600	1.0-15.0	1.5-9.0
600	40	2400	4.0-28.0	2.0-15.0
1000	70	4000	6.0-50.0	3.0-30.0

7B - NOMINAL RANGE & PERFORMANCE TABLE – HIGH PRESSURE (CODE H)

1000	70	12,000	50-100	N/A
2000	140	12,000	100-200	N/A
3000	210	12,000	150-300	N/A
4000	280	16,000	150-350	N/A

7C - NOMINAL RANGE & PERFORMANCE TABLE – WELDED SS (CODE S)

30	2	1000	1.0-4.5	0.5-3.5
60	4	1000	1.0-5.0	0.5-4.0
100	7	1000	1.5-10.0	1.0-6.0
200	14	1000	2.0-18.0	1.0-12.0
400	28	1600	5.0-32.0	2.0-20.0
600	40	2400	9.0-50.0	4.0-30.0
1000	70	4000	15.0-80.0	7.0-50.0

7D - NOMINAL RANGE & PERFORMANCE TABLE – BUNA (CODE V, T, R)

30 in.Hg Vac.†	–1	1000	1.5-10.0	0.5-7.0
30	2	1000	0.5-3.5	0.2-2.5
60	4	1000	0.5-4.0	0.5-3.0
100	7	1000	1.0-7.0	1.0-4.5
200	14	1000	12.5-12.0	1.0-8.5
400	28	1600	5.0-30.0	2.0-17.0
600	40	2400	8.0-48.0	4.0-34.0
1000	70	4000	10.0-80.0	5.0-55.0

Note: Switches calibrated at 70°F reference.

TO ORDER THIS F-SERIES PRESSURE SWITCH:

Select:	FPS	N7	P	B	07	XFS	30#
1. Function:							
2. Body:							
3. Switch Element (Table 3):							
4. Actuator Seal (Table 4):							
5. Pressure Port: Standard ½ NPTF							
6. Options (see table 6):							
7. Nominal Range (see Tables 7A, 7B, 7C, 7D):							

Consult factory for guidance in product selection
Phone (203) 378-8281 or visit our web site at www.ashcroft.com

ASHCROFT®

Pressure and Differential Pressure Switches, Watertight 316 SS Enclosure, G-Series

This broad Ashcroft® switch series is easy to use and readily retrofits to virtually all process, industrial and OEM applications.

- ***Single or dual independently adjustable setpoints meet all setpoint requirements***
- ***Watertight NEMA 4X, IP65 enclosure***
- ***316 SS construction***
- ***Choice of switch elements for all applications, including hermetically sealed***
- ***Fixed or fully adjustable deadband***
- ***Approved for UL and CSA ratings***
- ***Wide choice of actuators, including designs for fire-safe and NACE applications(7)***
- ***Standard pressure connection materials:***
  - ***Pressure psi ranges***
    - 316L stainless steel
  - ***Differential psid ranges***
    - 316 stainless steel standard
  - ***Pressure and differential inches of water ranges***
    - 316 stainless steel standard
- ***Readily available***
- ***3A sanitary connection available(7)***
- ***Setpoints adjustable from 15-100% of range***

1 - FUNCTION

GPA - Pressure control, single setpoint, adjustable deadband

GPD - Pressure control, two independently adjustable setpoints, fixed deadband

GPS - Pressure control, single setpoint, fixed deadband

GDA - Differential pressure control, single setpoint, adjustable deadband

GDD - Differential pressure control, two independently adjustable setpoints, fixed deadband

GDS - Differential pressure control, single setpoint, fixed deadband

2 - ENCLOSURE

N4 - NEMA 4/4X, IP65 (watertight and corrosion resistant)

3 - SWITCH ELEMENTS FOR GPA & GDA CONTROLS

Code	Description/Maximum Electrical Ratings UL/CSA Listed	
H	General purpose	10A,125/250 Vac 1/2A, 125 Vdc 1/4A, 250 Vdc
J	Hermetically sealed switch, general purpose	11A, 125/250 Vac 5A, 30 Vdc

SWITCH ELEMENTS FOR GPD, GPS, GDD & GDS CONTROLS

Code		Switch Elements UL/CSA Listed	
Single (GS)	Dual (GD)		
K(4)	KK	Narrow deadband	15A, 125/250 Vac
F(4)	FF	Sealed environment proof	15A, 125/250 Vac
G(5)	GG	General purpose	15A, 125/250/480 Vac 1/2A, 125 Vdc 1/4A, 250 Vdc
P(3)	PP	Hermetically sealed switch, narrow deadband	5A, 125/250 Vac
J	JJ	Hermetically sealed switch, general purpose	11A,125/250 Vac 5A, 30 Vdc

4 - ACTUATOR SEAL(1)

Code & Material	Process Temp.(2) Limits °F	Range			
		Vac. in.H2O	0-600 psi	1000 psi	2000-3000 psi
B-Buna N	0 to 150	●	●	●	●
V-Viton	20 to 300	●	●	●	
T-Teflon	0 to 150	●	●	●	●
S-SS(6)	0 to 300		●	●	
P-Monel(6)	0 to 300		●	●	

5 - PRESSURE PORT(1)

Order Code	
25	¼ NPT Female
06	¼ NPT Female and ½ NPT Male Combination
07	½ NPT Female

6 - OPTIONS

See pages 256-257

7 - STANDARD PRESSURE RANGES

See page 255

NOTES:

1. These items are wetted by process fluid.
2. Ambient operating temperature limits –20 to 150°F, all styles. Setpoint shift of ±1% of range per 50°F temperature change is normal. Switches calibrated at 70°F reference.
3. Estimated dc rating, 2.5A, 28 Vdc (not UL listed).
4. Estimated dc rating, .4A, 120 Vdc (not UL listed).
5. Not UL listed at 480 Vac.
6. Available on pressure only.
7. Refer to Option Table.

IN A RUSH? ASK FOR ASHCROFT GOLD SERVICE

HERMETICALLY SEALED SWITCH

We recommend hermetically sealed switch elements for improved reliability. The hermetically sealed switch provides uncompromising contact protection in harsh or corrosive environments. The Ashcroft G Series is also approved for installation in Division II hazardous areas when supplied with hermetically sealed contacts.

Features:
- UL-recognized component, guide WSQ2, File E85076
- All-stainless steel welded construction

TO ORDER THIS G-SERIES PRESSURE SWITCH:

Select:	GPD	N4	GG	B	25	X07	30#
1. Function:							
2. Enclosure:							
3. Switch Element:							
4. Actuator Seal:							
5. Pressure Port:							
6. Options (see pages 256-257):							
7. Pressure Range (see page 255):							

Consult factory for guidance in product selection
Phone (203) 378-8281 or visit our web site at www.ashcroft.com

ASHCROFT®

Temperature Switches, Watertight 316 Stainless Steel Enclosure, G-Series

This Ashcroft® specialty switch series is ideally suited for harsh and corrosive environments often found in many process, industrial and OEM applications.

- ***Watertight NEMA 4X, IP65 enclosure***
- ***316 SS construction***
- ***Choice of switch elements for all applications, including hermetically sealed (NEMA 4 meets Class I, Div. 2, Groups A, B, C, & D with hermetically sealed switch***
- ***Single or dual independently adjustable setpoints meet all setpoint requirements***
- ***Fixed or fully adjustable deadband***
- ***Readily available***
- ***UL, CSA listings standard***
- ***Setpoints adjustable from 15-100% of range***

HERMETICALLY SEALED SWITCH
We recommend hermetically sealed switch elements for improved reliability. The hermetically sealed switch provides uncompromising contact protection in harsh or corrosive environments. The Ashcroft G Series is also approved for installation in Division II hazardous areas when supplied with hermetically sealed contacts.

Features:
- UL-recognized component, guide WSQ2, File E85076
- All-stainless steel welded construction

IN A RUSH? ASK FOR ASHCROFT GOLD SERVICE

CE
LOOK FOR THIS AGENCY MARK ON OUR PRODUCTS

1 - FUNCTION

GTA - Temperature control, single setpoint, adjustable deadband

GTD - Temperature control, two independently adjustable setpoints, fixed deadband

GTS - Temperature control, single setpoint, fixed deadband

2 - ENCLOSURE

N4 - NEMA 4/4X, IP65 (watertight and corrosion resistant)

3 - SWITCH ELEMENTS FOR PTA CONTROLS

Order Code	Description/Maximum Electrical Ratings UL/CSA Listed	
H	General purpose	10A,125/250 Vac 1/2A, 125 Vdc 1/4A, 250 Vdc
J	Hermetically sealed switch, general purpose	11A, 125/250 Vac 5A, 30 Vdc

SWITCH ELEMENTS FOR GTD & GTS CONTROLS

Code		Switch Elements UL/CSA Listed	
Single (GS)	Dual (GD)		
K[2]	KK	Narrow deadband	15A, 125/250 Vac
F[2]	FF	Sealed environment proof	15A, 125/250 Vac
G[3]	GG	General purpose	15A, 125/250/480 Vac 1/2A, 125 Vdc 1/4A, 250 Vdc
P[1]	PP	Hermetically sealed switch, narrow deadband	5A, 125/250 Vac
J	JJ	Hermetically sealed switch, general purpose	11A,125/250 Vac 5A, 30 Vdc

4 - LINE LENGTH SELECTION[4]

Order Code	Line Length ft	Style
DIRECT MOUNT		
00	Not Applicable	Rigid
REMOTE MOUNT		
05	5	Capillary with Armor (Std.)
10	10	
15	15	
20	20	
25	25	

5 - THERMAL SYSTEM SELECTION

LINE MATERIAL

Order Code	Description
DIRECT MOUNT	
	No entry required for Direct Mount
REMOTE MOUNT	
A7	Stainless Steel Armor (Std.)

6 - BULB LENGTH SELECTION[5]

Order Code	"S" Dimension	Minimum Thermowell "U" Dimension
DIRECT MOUNT		
027	2¾″	—
040	4″	2½″
060	6″	4½″
090	9″	7½″
120	12″	10½″
REMOTE MOUNT		
030	3″	2½″

7 - OPTIONS

See pages 256-257

8 - STANDARD TEMPERTATURE RANGES

See page 255

NOTES:

1. Estimated dc rating, 2.5A, 28 Vdc (not UL listed).
2. Estimated dc rating, 0.4A, 120 Vdc (not UL listed).
3. Not UL listed at 480 Vac.
4. Additional line lengths available, call factory.
5. Additional bulb lengths available, call factory. Switches calibrated at 70°F ambient reference.

TO ORDER THIS G-SERIES TEMPERATURE SWITCH:

Select: **GTA N4 H 05 A7 030 XNH 150° to 260°F**

1. Function: GTA
2. Enclosure: N4
3. Switch Element: H
4. Line Length: 05
5. Thermal System: A7
6. Bulb Length: 030
7. Options (see pages 256-257): XNH
8. Temperature Range (see page 255): 150° to 260°F

Consult factory for guidance in product selection
Phone (203) 378-8281 or visit our web site at www.ashcroft.com

ASHCROFT®

Hydraulic Pressure Switches, Watertight Enclosure, H-Series

This Ashcroft® specialty switch is designed for applications such as trash compactors, balers and similar types of hydraulic control systems.

- ***Watertight NEMA 4X, IP66 enclosure***
- ***High overpressure protection***
- ***Vibration resistant O-ring sealed piston actuator***
- ***Choice of switch elements for all applications, including hermetically sealed***
- ***Fixed or limited adjustable deadband***
- ***Readily available***
- ***Setpoints adjustable from 15-100% of range***

IN A RUSH? ASK FOR ASHCROFT GOLD SERVICE

1 - FUNCTION

H4 - Hydraulic switch, type 400, watertight enclosure meets NEMA 4, 4X and 13, IP66 requirements

2 - SWITCH ELEMENTS

Order Code	Description/Maximum Electrical Ratings SPDT	
20[3]	Narrow deadband	15A, 125/250 Vac
23	Heavy duty ac	20A,125/250 Vac
24[1]	General purpose	15A,125/250/480 Vac 1/2A, 125 Vdc 1/4A, 250 Vdc
25	Heavy duty dc	10A,125/ Vac or dc 1/8HP 125/ Vac or dc
26[3]	Sealed environment proof	15A, 125/250 Vac
27	High temp. 300°F	15A, 125/250 Vac
28	High limit, manual reset	15A, 125/250 Vac
32	Hermetically sealed, general purpose	11A, 125/250 Vac 5A, 30 Vdc
50	Variable deadband	15A, 125/250 Vac
	Dual SPDT[2]	
61[3]	Dual narrow deadband	15A, 125/250 Vac
62[3]	Dual narrow environment proof	15A, 125/250 Vac
63	Dual high temp. 300°F	15A, 125/250 Vac
64	Dual general purpose	15A, 125/250/480 Vac 1/2A, 125 Vdc 1/4A, 250 Vdc

3 - ACTUATOR SEAL

Order Code	
V-Viton	Viton O-ring, 304 SS press. conn. Connection style 1/4 NPT Female

4 - OPTIONS

(see pages 256-257)

5 - STANDARD PRESSURE RANGES

Range psi	Adjustable Setpoint Limits psi	Proof Pressure psi
1000	150-1000	12,000
2000	300-2000	12,000
3000	450-3000	12,000
5000	750-5000	10,000
7500	1125-7500	10,000

NOTES:

1. Standard switch.
2. Dual switches are 2 SPDT snap-action switches not independently adjustable.
3. Estimated dc rating, 0.4A, 120 Vdc (not UL listed).

TO ORDER THIS H-SERIES PRESSURE SWITCH:

Select: **H4** **24** **V** **XFS** **3000#**

1. Enclosure: **H4**
2. Switch Element: **24**
3. Actuator Seal: **V**
4. Options (see pages 256-257): **XFS**
5. Pressure Range (from table 5): **3000#**

Consult factory for guidance in product selection
Phone (203) 378-8281 or visit our web site at www.ashcroft.com

ASHCROFT®

Pressure and Differential Pressure Switches, Watertight Enclosure, L-Series

This broad Ashcroft® switch series is easy to use and readily retrofits to virtually all process, industrial and OEM applications.

- ***Single or dual independently adjustable setpoints meet all setpoint requirements***
- ***Watertight NEMA 4X, IP66 enclosure***
- ***Choice of switch elements for all applications, including hermetically sealed***
- ***Fixed or adjustable deadband***
- ***Standard pressure connection materials:***

  Pressure psi ranges
  - 316L SS

  Differential psid ranges
  - Nickel-plated brass[7]

  Pressure and differential inches of water ranges
  - Epoxy coated carbon steel
- ***Approved for UL, CSA and FM[7] ratings***
- ***Wide choice of actuators, including designs for fire-safe and NACE applications[7]***
- ***Readily available***
- ***Setpoints adjustable from 15-100% of range***

IN A RUSH? ASK FOR ASHCROFT GOLD SERVICE

LOOK FOR THIS AGENCY MARK ON OUR PRODUCTS

1 - FUNCTION

LPA - Pressure control, single setpoint, adjustable deadband

LPD - Pressure control, two independently adjustable setpoints, fixed deadband

LPS - Pressure control, single setpoint, fixed deadband

LDA - Differential pressure control, single setpoint, adjustable deadband

LDD - Differential pressure control, two independently adjustable setpoints, fixed deadband

LDS - Differential pressure control, single setpoint, fixed deadband

2 - ENCLOSURE

N4 - NEMA 4/4X, IP66 (watertight and corrosion resistant)

3 - SWITCH ELEMENTS FOR LPA & LDA CONTROLS

Code	Description/Maximum Electrical Ratings UL/CSA Listed	
H	General purpose	10A,125/250 Vac 1/2A, 125 Vdc 1/4A, 250 Vdc
J	Hermetically sealed switch, general purpose	11A, 125/250 Vac 5A, 30 Vdc

SWITCH ELEMENTS FOR LPD, LPS, LDD & LDS CONTROLS

Code		Switch Elements UL/CSA Listed	
Single (PS)	Dual (PD)		
K[4]	KK	Narrow deadband	15A, 125/250 Vac
F[4]	FF	Sealed environment proof	15A, 125/250 Vac
G[5]	GG	General purpose	15A, 125/250/480 Vac 1/2A, 125 Vdc 1/4A, 250 Vdc
P[3]	PP	Hermetically sealed switch, narrow deadband	5A, 125/250 Vac
J	JJ	Hermetically sealed switch, general purpose	11A,125/250 Vac 5A, 30 Vdc

4 - ACTUATOR SEAL[1]

Code & Material	Process Temp.[2] Limits °F	Range			
		Vac. in.H_2O	0-600 psi	1000 psi	2000-3000 psi
B-Buna N	0 to 150	●	●	●	●
V-Viton	20 to 300	●	●	●	
T-Teflon	0 to 150	●	●	●	●
S-SS[6],[8]	0 to 300		●	●	
P-Monel[6]	0 to 300		●	●	

5 - PRESSURE PORT[1]

Order Code	
25	¼ NPT Female
06	¼ NPT Female and ½ NPT Male Combination
07	½ NPT Female

6 - OPTIONS

See pages 256-257

7 - STANDARD PRESSURE RANGES

See page 255

NOTES:

1. These items are wetted by process fluid.
2. Ambient operating temperature limits –20 to 150°F, all styles. Setpoint shift of ±1% of range per 50°F temperature change is normal. Switches calibrated at 70°F reference.
3. Estimated dc rating, 2.5A, 28 Vdc (not UL listed).
4. Estimated dc rating, .4A, 120 Vdc (not UL listed).
5. Not UL listed at 480 Vac.
6. Available on pressure only.
7. Refer to Option Table.
8. Order Option XUD, stainless steel process connection.

HERMETICALLY SEALED SWITCH

We recommend hermetically sealed switch elements for improved reliability. The hermetically sealed switch provides uncompromising contact protection in harsh or corrosive environments. The Ashcroft L Series is also approved for installation in Division II hazardous areas when supplied with hermetically sealed contacts.

Features:
- UL-recognized component, guide WSQ2, File E85076
- All-stainless steel welded construction

TO ORDER THIS L-SERIES PRESSURE SWITCH:

Select: **LPD N4 GG B 25 XK3 30#**

1. Function:
2. Enclosure:
3. Switch Element:
4. Actuator Seal:
5. Pressure Port:
6. Options (see pages 256-257):
7. Pressure Range (see page 255):

Consult factory for guidance in product selection
Phone (203) 378-8281 or visit our web site at www.ashcroft.com

ASHCROFT®

Temperature Switches, Watertight Enclosure, L-Series

This broad Ashcroft® switch series is easy to use and readily retrofits to virtually all process, industrial and OEM applications.

- ***Single or dual independently adjustable setpoint(s) meet all setpoint requirements***
- ***Watertight NEMA 4X, IP66 enclosure***
- ***Choice of switch elements for all applications, including hermetically sealed (NEMA 4 meets Class I, Div. 2, Groups A, B, C, & D with hermetically sealed switch***
- ***Fixed or fully adjustable deadband***
- ***Readily available***
- ***UL, CSA listings standard***
- ***Setpoints adjustable from 15-100% of range***

HERMETICALLY SEALED SWITCH

We recommend hermetically sealed switch elements for improved reliability. The hermetically sealed switch provides uncompromising contact protection in harsh or corrosive environments. The Ashcroft L Series is also approved for installation in Division II hazardous areas when supplied with hermetically sealed contacts.

Features:
- UL-recognized component, guide WSQ2, File E85076
- All-stainless steel welded construction

LOOK FOR THIS AGENCY MARK ON OUR PRODUCTS

IN A RUSH? ASK FOR ASHCROFT GOLD SERVICE

1 - FUNCTION

LTA - Temperature control, single setpoint, adjustable deadband

LTD - Temperature control, two independently adjustable setpoints, fixed deadband

LTS - Temperature control, single setpoint, fixed deadband

2 - ENCLOSURE

N4 - NEMA 4/4X, IP66 (watertight and corrosion resistant)

3 - SWITCH ELEMENTS FOR LTA CONTROLS

Order Code	Description/Maximum Electrical Ratings UL/CSA Listed	
H	General purpose	10A,125/250 Vac 1/2A, 125 Vdc 1/4A, 250 Vdc
J	Hermetically sealed switch, general purpose	11A, 125/250 Vac 5A, 30 Vdc

SWITCH ELEMENTS FOR LTD & LTS CONTROLS

Code		Switch Elements UL/CSA Listed	
Single (LS)	Dual (LD)		
K[2]	KK	Narrow deadband	15A, 125/250 Vac
F[2]	FF	Sealed environment proof	15A, 125/250 Vac
G[3]	GG	General purpose	15A, 125/250/480 Vac 1/2A, 125 Vdc 1/4A, 250 Vdc
P[1]	PP	Hermetically sealed switch, narrow deadband	5A, 125/250 Vac
J	JJ	Hermetically sealed switch, general purpose	11A,125/250 Vac 5A, 30 Vdc

4 - LINE LENGTH SELECTION[4]

Order Code	Line Length ft	Style
DIRECT MOUNT		
00	Not Applicable	Rigid
REMOTE MOUNT		
05	5	Capillary with Armor (Std.)
10	10	
15	15	
20	20	
25	25	

5 - THERMAL SYSTEM SELECTION

LINE MATERIAL

Order Code	Description
DIRECT MOUNT	
	No entry required for Direct Mount
REMOTE MOUNT	
A7	Stainless Steel Armor (Std.)

6 - BULB LENGTH SELECTION[5]

Order Code	"S" Dimension	Minimum Thermowell "U" Dimension
DIRECT MOUNT		
027	2¾″	—
040	4″	2½″
060	6″	4½″
090	9″	7½″
120	12″	10½″
REMOTE MOUNT		
030	3″	2½″

7 - OPTIONS

See pages 256-257

8 - STANDARD TEMPERTATURE RANGES

See page 255

NOTES:

1. Estimated dc rating, 2.5A, 28 Vdc (not UL listed).
2. Estimated dc rating, 0.4A, 120 Vdc (not UL listed).
3. Not UL listed at 480 Vac.
4. Additional line lengths available, call factory.
5. Additional bulb lengths available, call factory. Switches calibrated at 70°F ambient reference.

TO ORDER THIS L-SERIES TEMPERATURE SWITCH:

Select:	LTA	N4	H	05	A7	030	XNH	150° to 260°F
1. Function:								
2. Enclosure:								
3. Switch Element:								
4. Line Length:								
5. Thermal System:								
6. Bulb Length:								
7. Options (see pages 256-257):								
8. Temperature Range (see page 255):								

Consult factory for guidance in product selection
Phone (203) 378-8281 or visit our web site at www.ashcroft.com

ASHCROFT®

Electronic Pressure Switches, Watertight or Explosion-Proof Enclosure, N-Series

Special features:

- ***Ashcroft® K Series polysilicon thin film pressure sensor (transducer) for long, stable life (minimum 10 million cycles at rated load)***
- ***Setpoint repeatability of 0.5% of range***
- ***Choice of watertight, NEMA 4 or explosion-proof NEMA 7/9, IP66 enclosures for safety and reliability***
- ***Pressure setpoints to 20,000 psi***
- ***Deadbands adjustable between 0.1% and 95% of nominal range***
- ***Multi-turn potentiometers make setpoint and deadband adjustments easy***
- ***Status lights indicate switch state***
- ***Continuous power assures operation first time and every time even after years of inactivity***

Ideal for pressure alarm, shutdown, control on:

- ***Machine tools***
- ***Injection molding machines***
- ***Presses***
- ***Pumps***
- ***Hydraulic systems***
- ***Turbines and compressors***
- ***Most process applications***

NEMA 7 (N7) Model Shown

IN A RUSH? ASK FOR ASHCROFT GOLD SERVICE

1 - FUNCTION

NPA - Single setpoint with adjustable deadband

2 - ENCLOSURE

N4	NEMA 4, IP66, watertight
N7	NEMA 7/9, IP66, explosion proof

3 - OUTPUT

D	SPDT Relay	10A, 250 Vac 10A, 30 Vdc
I	SPDT Relay and current output	10A, 250 Vac 10A, 30 Vdc and 4-20mA

4 - POWER REQUIREMENTS

Code	Power Supply
L	110 Vac, 50/60 Hz
C	24 Vdc
V	250 Vac, 50/60 Hz

5 - PRESSURE CONNECTIONS

Code	Description
S01	⅛ NPT male
S02	¼ NPT male
S03	⅛ NPT female
S04	¼ NPT female
S05	7/16-20 SAE-male
S06	½ NPT male
S07	¼ AMINCO-female
S08	7/16-20 SAE-J514-female

6 - OPTIONS

Code	Description
XEA	External adjustment (N4 only)

7 - STANDARD PRESSURE RANGES

Range psi	Setpoint[1] Limits psi	Proof psi	Burst psi
60	3-60	120	480
100	5-100	200	800
200	10-200	400	1600
300	15-300	600	2400
500	25-500	1000	4000
750	35-750	1500	6000
1000	50-1000	2000	8000
2000	100-2000	4000	16,000
3000	150-3000	4500	15,000
5000	250-5000	7500	25,000
7500	375-7500	9000	22,500
10,000[2]	500-10,000	12,000	30,000
15,000[2]	750-15,000	18,000	45,000
20,000[2]	1000-20,000	24,000	60,000

(1) Switch setpoint is adjustable throughout these limits.
(2) Pressure connection S07 only on these ranges.

NOTES:

Temperature Specifications (70°F ref.)
–20°F to 160°F ambient and process
Setpoint shift of up to 2% of range per 50°F change can be expected

OPTIONAL TRANSMITTER SPECIFICATIONS

PERFORMANCE CHARACTERISTICS

Accuracy Class (F.S.):	**1%**
Nonlinearity	
Terminal Point*	±0.7%
B.F.S.L.	±0.4%
Hysteresis	±0.2%
Nonrepeatability	±0.07%
Interchangeability	±1.0%

*Includes hysteresis

Stability: ±0.5% F.S./year

Durability: 10^8 cycles 20/80% F.S. with negligible performance change

Response Time: Less than 5msec

ENVIRONMENTAL CHARACTERISTICS

Temperature Limits:

Storage	–65/+250°F
Operating	–20/+180°F
Compensated	–20/+160°F

Thermal Coefficients (70°F ref.):

Accuracy	Zero and Span
1%	±0.040% F.S./°F

ELECTRICAL SPECIFICATIONS

Output Signal: Supply Voltage:
4-20mA (2 wire)12-36 Vdc unregulated

MECHANICAL SPECIFICATIONS

Standard Construction Materials:
Wetted Parts:
Diaphragm – 17-4PH SS
Pressure Connection – 316SS

Reverse wiring protected.
Zero Offset: ±1.0%F.S.

Load Limitations 4-20mA Output
Loop Resistance ( )

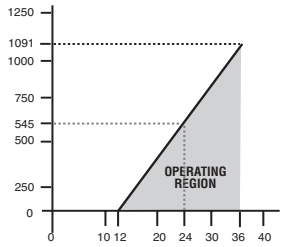

V_{min} = 12V+ [.022A*(R_L)]
*Includes a 10% safety factor
$R_L = R_S + R_W$
R_L = Loop Resistance (ohms)
R_S = Sense Resistance (ohms)
R_W = Wire Resistance (ohms)

TO ORDER THIS N-SERIES PRESSURE SWITCH:

Select: **NPA N4 D L S02 XEA 100#**

1. Function: NPA
2. Body: N4
3. Electrical Output: D
4. Power Requirements: L
5. Pressure Port: S02
6. Options (see table 6): XEA
7. Pressure Range (see table 7): 100#

Consult factory for guidance in product selection
Phone (203) 378-8281 or visit our web site at www.ashcroft.com

ASHCROFT®

Electronic Pressure Switches, Watertight Enclosure with Pressure Indication, N-Series

Ideal for pressure alarm, shutdown, control on:

- ***Machine tools***
- ***Injection molding machines***
- ***Presses***
- ***Pumps***
- ***Hydraulic systems***
- ***Turbines and compressors***
- ***Most process applications***

Special features:

- ***Ashcroft® K Series polysilicon thin film pressure sensor (transducer) for long, stable life (minimum 10 million cycles at rated load)***
- ***Setpoint repeatability of 0.5% of range***
- ***Watertight, NEMA 4X, IP66 enclosures for safety and reliability***
- ***Pressure setpoints to 20,000 psi***
- ***Deadbands adjustable between 0.5% and 95% of nominal range***
- ***Multi-turn potentiometers make setpoint and deadband adjustments easy***
- ***Status lights indicate switch state***
- ***Continuous power assures operation first time and every time even after years of inactivity***

IN A RUSH? ASK FOR ASHCROFT GOLD SERVICE

1 - FUNCTION

NPI - Single setpoint with adjustable deadband and indication

2 - ENCLOSURE

N4	NEMA 4, IP66, watertight

3 - OUTPUT

D	SPDT Relay	10A, 250 Vac 10A, 30 Vdc
I	SPDT Relay and current output	10A, 250 Vac 10A, 30 Vdc and 4-20mA

4 - POWER REQUIREMENTS

Code	Power Supply
L	110 Vac, 50/60 Hz
C	24 Vdc
V	250 Vac, 50/60 Hz

5 - PRESSURE CONNECTIONS

Code	Description
S01	⅛ NPT male
S02	¼ NPT male
S03	⅛ NPT female
S04	¼ NPT female
S05	7/16-20 SAE-male
S06	½ NPT male
S07	¼ AMINCO-female
S08	7/16-20 SAE-J514-female

6 - OPTIONS

Code	
XEA	External adjustment (N4 only)

7 - STANDARD PRESSURE RANGES

Range psi	Setpoint(1) Limits psi	Proof psi	Burst psi
60	3-60	120	480
100	5-100	200	800
200	10-200	400	1600
300	15-300	600	2400
500	25-500	1000	4000
750	35-750	1500	6000
1000	50-1000	2000	8000
2000	100-2000	4000	16,000
3000	150-3000	4500	15,000
5000	250-5000	7500	25,000
7500	375-7500	9000	22,500
10,000(2)	500-10,000	12,000	30,000
15,000(2)	750-15,000	18,000	45,000
20,000(2)	1000-20,000	24,000	60,000

(1) Switch setpoint is adjustable throughout these limits.
(2) Pressure connection S07 only on these ranges.

NOTES:

Temperature Specifications (70°F ref.)
–20°F to 160°F ambient and process
Setpoint shift of up to 2% of range per 50°F change can be expected

OPTIONAL TRANSMITTER SPECIFICATIONS

PERFORMANCE CHARACTERISTICS

Accuracy Class (F.S.):	1%
Nonlinearity	
Terminal Point*	±0.7%
B.F.S.L.	±0.4%
Hysteresis	±0.2%
Nonrepeatability	±0.07%
Interchangeability	±1.0%

*Includes hysteresis

Stability: ±0.5% F.S./year

Durability: 10^8 cycles 20/80% F.S. with negligible performance change

Response Time: Less than 5msec

ENVIRONMENTAL CHARACTERISTICS

Temperature Limits:

Storage	–65/+250°F
Operating	–20/+180°F
Compensated	–20/+160°F

Thermal Coefficients (70°F ref.):

Accuracy	Zero and Span
1%	±0.040% F.S./°F

ELECTRICAL SPECIFICATIONS

Output Signal: Supply Voltage:
4-20mA (2 wire)12-36 Vdc unregulated

MECHANICAL SPECIFICATIONS

Standard Construction Materials:
Wetted Parts:
Diaphragm – 17-4PH SS
Pressure Connection – 316SS

Reverse wiring protected.
Zero Offset: ±1.0%F.S.

Load Limitations 4-20mA Output
Loop Resistance ( )

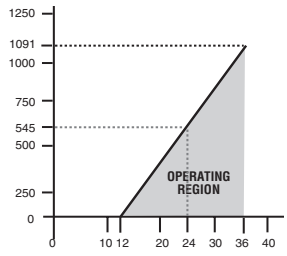

V_{min} = 12V+ [.022A*(R_L)]
*Includes a 10% safety factor
$R_L = R_S + R_W$
R_L = Loop Resistance (ohms)
R_S = Sense Resistance (ohms)
R_W = Wire Resistance (ohms)

TO ORDER THIS N-SERIES PRESSURE SWITCH:

Select:	NPI	N4	D	L	S02	XEA	100#
1. Function:							
2. Body:							
3. Electrical Output:							
4. Power Requirements:							
5. Pressure Port:							
6. Options (see table 6):							
7. Pressure Range (see table 7):							

Consult factory for guidance in product selection
Phone (203) 378-8281 or visit our web site at www.ashcroft.com

ASHCROFT®

Pressure and Differential Pressure Switches, Watertight and Explosion-Proof Enclosure, P-Series

This top-of-the-line Ashcroft® process switch series includes many state-of-the-art features for safety and reliability in virtually all process applications.

- ***Die cast aluminum enclosure is standard with NEMA 4X (weatherproof, corrosion resistant) NEMA 7 (explosion-proof enclosure Class I, Div. 1 & 2, Groups B, C & D and Class II, Div. 1 & 2, Groups E, F & G). Dual chamber design allows set-point changes to be made safely even with power connected.***
- ***Single or dual independently adjustable setpoints meet all setpoint requirements***
- ***UL, CSA[7] listed***
- ***Fixed or adjustable deadband***
- ***Readily available***
- ***Standard pressure connection materials:***
  - ***Pressure psi ranges - 316L stainless steel***
  - ***Differential pressure ranges - Nickel plated brass[8]***
  - ***Pressure and differential inches of water ranges - Epoxy coated carbon steel***
- ***Setpoints adjustable from 15-100% of range***
- ***Dual Seal Rating models available***

1 - FUNCTION

PPA - Pressure control, single setpoint, adjustable deadband

PPD - Pressure control, two independently adjustable setpoints, fixed deadband

PPS - Pressure control, single setpoint, fixed deadband

PDA - Differential pressure control, single setpoint, adjustable deadband

PDD - Differential pressure control, two independently adjustable setpoints, fixed deadband

PDS - Differential pressure control, single setpoint, fixed deadband

2 - ENCLOSURE

N7 - NEMA 7/9, IP65, watertight, corrosion resistant and explosion proof Div. 1 & 2

3 - SWITCH ELEMENTS FOR PPA & PDA CONTROLS

Code	Description/Maximum Electrical Ratings UL/CSA Listed	
H	General purpose	10A,125/250 Vac 1/2A, 125 Vdc 1/4A, 250 Vdc
J	Hermetically sealed switch, general purpose	11A, 125/250 Vac 5A, 30 Vdc

SWITCH ELEMENTS FOR PPD, PPS, PDD & PDS CONTROLS

Code		Switch Elements UL/CSA Listed	
Single (PS)	Dual (PD)		
K[4]	KK	Narrow deadband	15A, 125/250 Vac
F[4]	FF	Sealed environment proof	15A, 125/250 Vac
G[5]	GG	General purpose	15A, 125/250/480 Vac 1/2A, 125 Vdc 1/4A, 250 Vdc
P[3]	PP	Hermetically sealed switch, narrow deadband	5A, 125/250 Vac
J	JJ	Hermetically sealed switch, general purpose	11A,125/250 Vac 5A, 30 Vdc

4 - ACTUATOR SEAL[1]

Code & Material	Process Temp.[2] Limits °F	Range			
		Vac. in.H_2O	0-600 psi	1000 psi	2000-3000 psi
B-Buna N	0 to 150	●	●	●	●
V-Viton	20 to 300	●	●	●	
T-Teflon	0 to 150	●	●	●	●
S-SS[6][9]	0 to 300		●	●	
P-Monel[6]	0 to 300		●	●	

5 - PRESSURE PORT[1]

Order Code	
25	¼ NPT Female
06	¼ NPT Female and ½ NPT Male Combination
07	½ NPT Female

6 - OPTIONS

See pages 256-257

7 - STANDARD PRESSURE RANGES

See page 254

NOTES:

1. These items are wetted by process fluid.
2. Ambient operating temperature limits –20 to 150°F, all styles. Setpoint shift of ±1% of range per 50°F temperature change is normal. Switches calibrated at 70°F reference.
3. Estimated dc rating, 2.5A, 28 Vdc (not UL listed).
4. Estimated dc rating, .4A, 120 Vdc (not UL listed).
5. Not UL listed at 480 Vac.
6. Available on pressure only.
7. Refer to Option Table.
8. Order Option XUD, stainless steel process connection.
9. On differential switches, stainless steel is available in 15, 30, 60 and 90 psid ranges only. Includes Teflon O-ring and 316 SS connection.

HERMETICALLY SEALED SWITCH

We recommend hermetically sealed switch elements for improved reliability. The hermetically sealed switch provides uncompromising contact protection in harsh or corrosive environments.

Features:
- UL-recognized component, guide WSQ2, File E85076
- All-stainless steel welded construction

TO ORDER THIS P-SERIES PRESSURE SWITCH:

Select:	PPD	N7	GG	B	25	XK3	30#
1. Function:							
2. Enclosure:							
3. Switch Element:							
4. Actuator Seal:							
5. Pressure Port:							
6. Options (see pages 256-257):							
7. Pressure Range (see page 254):							

Consult factory for guidance in product selection
Phone (203) 378-8281 or visit our web site at www.ashcroft.com

ASHCROFT®

Temperature Switches, Watertight and Explosion-Proof Enclosure, P-Series

This top-of-the-line Ashcroft® process switch series includes many state-of-the-art features for safety and reliability in virtually all process applications.

- ***Explosion-proof NEMA 7/9, IP55 enclosures***
- ***Single or dual independently adjustable setpoints meet all setpoint requirements***
- ***UL listings standard***
- ***CSA listings available(6)***
- ***Dual-chamber design for improved safety. Choice of switch elements for all applications, including hermetically sealed***
- ***Fixed or fully adjustable deadband***
- ***Setpoints adjustable from 15-100% of range***

HERMETICALLY SEALED SWITCH
We recommend hermetically sealed switch elements for improved reliability. The hermetically sealed switch provides uncompromising contact protection in harsh or corrosive environments.

Features:
- UL-recognized component, guide WSQ2, File E85076
- All-stainless steel welded construction
- Available on 400 and 700 models

1 - FUNCTION

PTA - Temperature control, single setpoint, adjustable deadband

PTD - Temperature control, two independently adjustable setpoints, fixed deadband

PTS - Temperature control, single setpoint, fixed deadband

2 - ENCLOSURE

N7 - NEMA 7/9, IP65 (explosion proof Div. 1 & 2)

3 - SWITCH ELEMENTS FOR PTA CONTROLS

Order Code	Description/Maximum Electrical Ratings UL/CSA Listed	
H	General purpose	10A,125/250 Vac 1/2A, 125 Vdc 1/4A, 250 Vdc
J	Hermetically sealed switch, general purpose	11A, 125/250 Vac 5A, 30 Vdc

SWITCH ELEMENTS FOR PTD & PTS CONTROLS

Code		Switch Elements UL/CSA Listed	
Single (PS)	Dual (PD)		
K(2)	KK	Narrow deadband	15A, 125/250 Vac
F(2)	FF	Sealed environment proof	15A, 125/250 Vac
G(3)	GG	General purpose	15A, 125/250/480 Vac 1/2A, 125 Vdc 1/4A, 250 Vdc
P(1)	PP	Hermetically sealed switch, narrow deadband	5A, 125/250 Vac
J	JJ	Hermetically sealed switch, general purpose	11A,125/250 Vac 5A, 30 Vdc

4 - LINE LENGTH SELECTION(4)

Order Code	Line Length ft	Style
DIRECT MOUNT		
00	Not Applicable	Rigid
REMOTE MOUNT		
05	5	Capillary with Armor (Std.)
10	10	
15	15	
20	20	
25	25	

5 - THERMAL SYSTEM SELECTION

LINE MATERIAL	
DIRECT MOUNT	
Order Code	**Description**
No entry required for Direct Mount	
REMOTE MOUNT	
A7	Stainless Steel Armor (Std.)

6 - BULB LENGTH SELECTION(5)

Order Code	"S" Dimension	Minimum Thermowell "U" Dimension
DIRECT MOUNT		
027	2¾″	—
040	4″	2½″
060	6″	4½″
090	9″	7½″
120	12″	10½″
REMOTE MOUNT		
030	3″	2½″

7 - OPTIONS

See pages 256-257

8 - STANDARD TEMPERTATURE RANGES

See page 254

NOTES:

1. Estimated dc rating, 2.5A, 28 Vdc (not UL listed).
2. Estimated dc rating, 0.4A, 120 Vdc (not UL listed).
3. Not UL listed at 480 Vac.
4. Additional line lengths available, call factory.
5. Additional bulb lengths available, call factory.
6. Refer to Option Table. Switches calibrated at 70°F ambient reference.

TO ORDER THIS P-SERIES TEMPERATURE SWITCH:

Select:	PTA	N7	H	05	A7	030	XNH	150° to 260°F
1. Function:								
2. Enclosure:								
3. Switch Element:								
4. Line Length:								
5. Thermal System:								
6. Bulb Length:								
7. Options (see pages 256-257):								
8. Temperature Range (see page 254):								

Consult factory for guidance in product selection
Phone (203) 378-8281 or visit our web site at www.ashcroft.com

ASHCROFT®

Nominal Ranges and Deadbands Pressure and Temperature Switches, B-Series

PRESSURE/VACUUM SWITCHES

Nominal Range [1]			Overpressure Ratings		Approximate Deadband[2] Switch Element (Buna-N Diaphragm)				
			Proof psi	Burst psi	20, 26, 27	21, 24, 31	50	22	32, 42
Vacuum									
–30 in.Hg	–760 mmHg	–100 kPa	250	400	0.3-0.7	1.5-4.0	0.5-2.2	0.4-1.5	2.1-4.2
Compound									
–15 in.H_2O/	–375 mmH_2O/	–3.7 kPa	20	35	0.15-0.75/	1.5-2.5/	.45-2.0/	0.5-1.2/	2.1-3.5/
15 in.H_2O	375 mmH_2O	3.7 kPa			0.15-0.75	1.5-2.5	0.45-2.0	0.5-1.2	.2.1-3.5
–30 in.H_2O/	–760 mmH_2O/	–7.5 kPa	20	35	0.30-0.60/	1.5-2.5/	0.45-2.0/	0.5-1.5/	2.1-3.5/
30 in.H_2O	760 mmH_2O	7.5 kPa			0.30-0.60	1.5-2.5	0.45-2.0	0.5-1.5	2.1-3.5
–30 in.Hg/	–760 mmHg/	–100 kPa	250	400	0.5-1.0/	2.0-3.5/	0.75-2.5/	0.7-1.8/	2.8-4.2/
15 psi	1.0 kg/cm^2	100 kPa			0.3-0.7	0.5-2.0	0.5-1.0	0.5-1.4	0.7-2.1
–30 in.Hg/	–760 mmHg/	–100 kPa	250	400	1.0-1.5/	3.0-6.0/	1.2-4.5/	1.4-2.4/	4.2-8.4/
30 psi	2.0 kg/cm^2	200 kPa			0.3-0.8	1.0-2.0	0.7-1.5	0.4-1.3	1.4-2.8
–30 in.Hg/	–760m mmHg/	–100 kPa	250	400	2.0-3.0	5.0-9.0	2.5-7.0	2.8-4.5/	7.0-12.0
60 psi	4.0 kg/cm^2	400 kPa			0.7-1.5	3.0-5.0	1.1-4.0	1.0-2.3	4.2-7.0
Pressure									
10 in.H_2O	250 mmH_2O	2.5 kPa	20	35	0.2-0.5	1.0-2.0	0.35-1.5	0.4-1.0	1.4-2.8
30 in.H_2O	750 mmH_2O	7.5 kPa	20	35	0.3-0.6	1.5-2.5	4.5-2.0	0.5-2.0	2.1-3.5
60 in.H_2O	1500m mmH_2O	15 kPa	20	35	0.5-1.3	1.5-3.5	0.9-2.5	0.7-3.0	2.1-5.0
100 in.H_2O	2500 mmH_2O	25 kPa	20	35	0.6-1.6	2.5-5.5	1.1-4.0	1.0-4.0	3.5-7.7
150 in.H_2O	3750 mmH_2O	37 kPa	20	35	1.0-2.5	4.5-8.5	1.7-6.5	2.0-6.0	6.0-12.0
15 psi	1.0 kg/cm^2	100 kPa	500	1500	0.1-.35	0.5-1.5	0.2-1.0	0.4-1.0	0.7-2.1
30 psi	2.5 kg/cm^2	200 kPa	500	1500	0.1-.50	0.5-1.5	0.3-1.0	0.4-1.0	0.7-2.1
60 psi	4.0 kg/cm^2	400 kPa	500	1500	0.3-1.0	1.0-3.5	0.7-2.5	0.6-2.0	1.4-5.0
100 psi	7.0 kg/cm^2	700 kPa	1000	3000	0.5-1.7	1.5-5.0	1.1-3.5	1.0-4.5	2.1-7.0
200 psi	14 kg/cm^2	1400 kPa	1000	3000	1-3	5-13	2-9	3.0-7.5	7.0-18.2
400 psi	28 kg/cm^2	2800 kPa	2400	3000	4-7.5	5-24	5.5-15	4.0-11.0	7.0-33.6
600 psi	42 kg/cm^2	4200 kPa	2400	3000	4-11	9-30	7-20	5.0-23.0	12.6-42
1000 psi [8]	70 kg/cm^2	7000 kPa	12000	18000	7-30	30-110	18-70	15.0-60	42-154
3000 psi	210 kg/cm^2	21000 kPa	12000	18000	15-60	80-235	37-160	30.0-130.0	112-329

DIFFERENTIAL PRESSURE SWITCHES

Nominal Range [1]			Overpressure Ratings		Approximate Deadband[2,4] Switch Element (Buna-N Diaphragm)				
			Static psi	Proof psi	20, 26, 27	21, 24, 31	50	22	32, 42
30 in.H_2Od	750 mmH_2O	7.5 kPa	5.4	21.6	0.3-0.6	1.5-2.5	0.45-2.0	0.5-2.0	2.1-3.5
60 in.H_2Od	1500 mmH_2O	15 kPa	5.4	21.6	0.5-1.3	1.5-3.5	0.9-2.5	0.7-3.0	2.1-5.0
100 in.H_2Od	2500 mmH_2O	25 kPa	5.4	21.6	0.6-1.6	2.5-5.5	1.1-4.0	1.0-4.0	3.5-7.7
150 in.H_2Od	3750 mmH_2O	37 kPa	5.4	21.6	1.0-2.5	4.5-8.5	1.8-6.5	2.0-6.0	6.3-12.0
15 psid	1 kg/cm^2	100 kPa	500	2000	0.5-1.0	2.0-5.0	0.7-3.5	0.7-1.4	2.8-7.0
30 psid	2.5 kg/cm^2	200 kPa	500	2000	1.0-2.0	2.0-5.0	1.5-3.5	1.4-2.8	2.8-7.0
60 psid	4 kg/cm^2	400 kPa	500	2000	2.0-4.0	3.0-6.0	3.0-4.5	2.8-5.6	4.2-8.5
100 psid	7 kg/cm^2	700 kPa	1000	4000	4.0-10.0	11.0-20.0	7.0-15.0	6.0-14.0	16.0-28.0
200 psid	14 kg/cm^2	1400 kPa	1000	4000	5.0-15.0	12.0-40.0	10.0-86.0	7.0-21.0	17.0-56.0
400 psid	28 kg/cm^2	2800 kPa	1000	8000	10.0-20.0	20.0-60.0	15.0-40.0	14.0-28.0	28.0-84.0
600 psid	42 kg/cm^2	4200 kPa	1000	8000	20.0-40.0	80.0-150.0	30.0-115.0	30.0-56.0	112.0-210.0

TEMPERATURE RANGE SELECTION

Adjustable Range		Max. Temp. °F	Approximate Deadband[6] Switch Element				
°F	°C		20, 26, 27	21, 24, 31	50	22	32, 42
–40 to 60	–40 to16	400	1.0-2.0	3.0-8.0	1.5-5.5	1.4-6.0	8.0-16.0
0 to 100	–20 to 40	400	1.5-3.0	5.0-12.0	2.2-8.5	1.5-7.5	9.0-20.0
75 to 205	20 to 95	400	1.5-3.5	8.0-16.0	2.5-12.0	2.0-9.0	10.0-24.0
150 to 260	65 to125	400	1.5-3.0	5.0-12.0	2.2-8.5	2.0-9.0	10.0-24.0
235 to 375	110 to 190	500	1.5-3.5	5.0-12.0	2.2-8.5	2.0-9.0	10.0-24.0
350 to 525[7]	175 to 275	700	2.0-4.5	8.0-16.0	3.2-12.0	2.5-10.0	15.0-34.0
500 to 750[3]	260 to 400	900	4.0-8.0	16.0-30.0	7.0-24.0	5.0-23.0	30.0-50.0

NOTES:

1. Switches may generally be set between 15% and 100% of nominal range on increasing pressure. Consult factory for applications where setpoints must be lower.
2. All deadbands are given in English units as shown in the nominal range column. Deadbands shown are for switches with Buna N diaphragm.

   Approximate deadbands for optional diaphragms:
   Viton: Multiply Buna N value by 1.4
   Teflon: Multiply Buna N value by 1.2
   Stainless Steel: Multiply Buna N value by 1.7
   Monel: Multiply Buna N value by 1.7
3. Available with remote mount thermal system only.
4. Deadbands given are for zero static working pressure.
5. For approximate deadbands for dual switch elements, multiply the single switch element by 1.6.
6. All deadbands given in °F.
7. Not available with 2$^3/_4$″ stem.
8. Proof pressure is 4000 psi with stainless steel and monel welded diaphragms.

ASHCROFT®

Nominal Ranges and Deadbands Pressure and Temperature Switches, P-Series

PRESSURE/VACUUM SWITCHES

Nominal Range [1]			Overpressure Ratings Proof psi	Overpressure Ratings Burst psi	Approximate Deadband[2] Switch Element (Buna-N Diaphragm) PPA[3] Switch Element J, H	PPS[4] G	PPS[4] J, H	PPS[4] K, F	PPS[4] P	PPD[4] GG	PPD[4] JJ, HH	PPD[4] KK,FF	PPD[4] PP
Vacuum													
–30 in.Hg	–760 mmHg	–100 kPa	250	400	7-26	3-5	3-6.5	1-2	1-2.5	3-5	3-6.5	1-2	1.0-3.5
Compound													
–30 in.Hg/ 15 psi	–760 mmHg/ 1.0 kg/cm²	–100 kPa 100 kPa	250	400	10-25 4-13	3-5 1-2	2.5-3.5 1-3	1-2 0.5-2	1-2.5 0.5-2	3-5 2-4	2.5-4.5 1-3	1-2 0.5-1	1.0-3.5/ 1.0-2.8
Pressure													
30 in.H_2O	750 mmH_2O	7.5 kPa	20	35	4.-27	1.5-3.5	2-5	0.5-1	0.5-2	1.5-3.5	2-5	0.5-1	1.0-2.8
60 in.H_2O	1500 mmH_2O	15 kPa	20	35	5-54	1.5-3.5	2.5-5	0.5-2.0	1-2	1.5-3.5	2.5-5.0	.0.5-2.0	1.0-2.8
100 in.H_2O	2500 mmH_2O	25 kPa	20	35	8.5-90	4-6	4-8.5	1-2	1-3	4-7	4-8.5	1-2	2.0-4.2
150 in.H_2O	3750 mmH_2O	37 kPa	20	35	18-135	5-11	10-18	1.5-3	2-6	8-14	10-18	1.5-3	3.0-8.4
15 psi	1 kg/cm²	100 kPa	500	1500	2.5-13	1-2	1-0.5	0.5-1	0.5-2	1-2	1-3.0	0.5-1	1.0-2.8
30 psi	2.5 kg/cm²	200 kPa	500	1500	3.5-26	1-2.5	2-4.5	0.5-1.5	0.5-1.5	1-2.5	2-4.5	0.5-1.5	1.0-3.0
60 psi	4 kg/cm²	400 kPa	500	1500	6.5-54	2-4	4-7	1-2	1-2.5	2-4	4-7	1-2	2.0-3.5
100 psi	7 kg/cm²	700 kPa	1000	3000	10-90	5-7	5-10	1-2.5	2-4	5-7	5-10	1-2.5	2.0-5.6
200 psi	14 kg/cm²	1400 kPa	1000	3000	20-180	10-15	10-18	1-4	5-15	10-20	15-25	3-6	4.0-12.0
400 psi	28 kg/cm²	2800 kPa	2400	3000	45-360	16-30	16-45	4-8	5.0-15	16-30	16-45	4-8	5.0-21.0
600 psi	42 kg/cm²	4200 kPa	2400	3000	75-540	16-50	20-75	5-8	6-25	16-50	20-75	5-15	8.0-35.0
1000 psi [9]	70 kg/cm²	7000 kPa	12000	14000	160-900	75-130	50-160	7-30	10-85	75-130	50-160	7-30	20.0-119.0
2000 psi	140 kg/cm²	14000 kPa	12000	14000	350-1800	150-200	150-350	20-50	25-110	150-200	150-350	20-50	35.0-154.0
3000 psi	210 kg/cm²	21000 kPa	12000	14000	400-2600	180-250	180-400	30-70	30-190	180-250	180-400	30-70	40.0-266.0

DIFFERENTIAL PRESSURE SWITCHES

Nominal Range [1]		Static Working Pressure psi	Overpressure Ratings Proof psi	Approximate Deadband[2,6] Switch Element (Buna-N Diaphragm) PDA[3] Switch Element J, H	PDS[4] G	PDS[4] J, H	PDS[4] K, F	PDS[4] P	PDD[4] GG	PDD[4] JJ, HH	PDD[4] KK,FF	PDD[4] PP
30 in.H_2Od	750 mmH_2O	5.4	21.6	5.5-27	3-5	4-6.5	0.5-1	.5-2	3-5	4-6.5	0.5-1	1.0-2.8
60 in.H_2Od	1500 mmH_2O	5.4	21.6	5.5-54	3-5	4.5-6.5	0.5-2	1-2	3-5	4.-6.5	0.5-2	1.0-2.8
100 in.H_2Od	2500 mmH_2O	5.4	21.6	8.5-90	4-6	4.0-8.5	1-2	1-3	4-7	4.-8.5	1-2	2.0-4.2
150 in.H_2Od	3750 mmH_2O	5.4	21.6	18-135	5-11	10-18	1.5-3	2-6	8-14	10-18	1.5-3.	3.0-8.4
15 psid	2 kg/cm²	500	2000	2.5-13	1-2	1-3	0.5-1	0.5-2	1-2	1-3	0.5-1	1.0-2.8
30 psid	2 kg/cm²	500	2000	3.5-27	1-2.5	2-4.5	0.5-1	1-2	1-2.5	2-4.5	0.5-1.5	1.0-2.8
60 psid	4 kg/cm²	500	2000	6.5-54	2-4	4-7	1-1.5	1-2.5	1-2.4	4-7	1-2	1.0-3.5
100 psid	7 kg/cm²	500	2000	10-90	5-7	5-10	1-2.5	2-4	5-7	5-10	1-2.5	2.0-5.6
200 psid	14 kg/cm²	1000	4000	20-180	10-1 5	10-18	1-4	5-8	10-20	10-18	3-6	3.0-11.2
400 psid	28 kg/cm²	1000	8000	45-360	16-30	16-45	4-8	5-15	16-30	16-45	4-8	40.-21.0

TEMPERATURE RANGE SELECTION

NominalRange °F	NominalRange °C	Max. Temp. °F	Approximate Deadband (Buna N Diaphragm)[2] PTA[3] Switch Element J, H	PTS[4] G	PTS[4] J, H	PTS[4] K, F	PTS[4] P	PTD[4] GG	PTD[4] JJ, HH	PTD[4] KK, FF	PTD[4] PP
–40 to 60	–40 to16	400	18-90	2-10	9-18	1-2	1-5	2-10	9-18	1-2	2.0-7.0
0 to 100	–20 to 40	400	30-90	2-15	10-30	1-3	1.5-7	2-15	10-30	1.5-3	3.0-10.0
75 to 205	20 to 95	400	34-120	2-17	10-34	1.5-3.5	1.5-8	2-17	10-34	1.5-3.5	3.0-12.0
150 to 260	65 to125	400	25-100	2.5-12	9-25	1-2.5	1-7	2.5-12	9-25	1-2.5	3.0-10.0
235 to 375	110 to 190	500	35-130	2-18	10-35	1-3.5	1.5-8	2-18	10-35	1-3.5	3.0-12.0
350 to 525[8]	175 to 275	700	40-165	3-25	15-40	2-4.5	2.5-11	3-25	15-40	2-4.5	4.0-15.5
500 to 750[5]	200 to 400	900	50-200	20-36	36-60	5-10	6-21	20-36	36-60	5-10	7.0-30.0

NOTES:

1. Switches may generally be set between 15% and 100% of nominal range on increasing pressure. Consult factory for applications where setpoints must be lower.
2. All deadbands are given in English units as shown in the nominal range column. Deadbands shown are for switches with Buna N diaphragm.

Approximate deadbands for optional diaphragms:
Viton: Multiply Buna N value by 1.4
Teflon: Multiply Buna N value by 1.2
Stainless Steel: Multiply Buna N value by 1.7
Monel: Multiply Buna N value by 1.7

3. Deadbands for PTA, PPA and PDA are adjustable between the values shown.
4. Deadbands for PPS, PPD, PDS, PDD, PTD, and PDS models are fixed within the range of values shown.
5. Available with remote mount thermal system only.
6. Deadbands given are for zero static working pressure.
7. All deadbands given in °F.
8. Not available with 2¾″ stem.
9. Proof pressure is 4000 psi with stainless steel and monel welded diaphragms.

Consult factory for guidance in product selection
Phone (203) 378-8281 or visit our web site at
www.ashcroft.com

ASHCROFT®

Nominal Ranges and Deadbands Pressure and Temperature Switches, L- and G-Series

PRESSURE/VACUUM SWITCHES

Nominal Range [1]		Overpressure Ratings: Proof psi	Overpressure Ratings: Minimum Burst psi	Approximate Deadband[2] Switch Element (Buna-N Diaphragm): LPA-GPA[3] J, H	LPS-GPS[4] G	LPS-GPS[4] J, H	LPS-GPS[4] K, F	LPS-GPS[4] P	LPD-GPD[4] GG	LPD-GPD[4] JJ, HH	LPD-GPD[4] KK,FF	LPD-GPD[4] PP
Vacuum												
–30 in.Hg	–760 mmHg	250	400	6-24	2.5-4	4-6	1-2	1-2.5	3-5.5	4-6.5	1-2	1-2.5
Compound												
–30 in.Hg/ 15 psi	–760 mmHg/ 1.0 kg/cm²	250	400	6-24 3-12	2.5-4 1-2.5	4-6 1-3.5	1-2 0.5-1.5	1-2.5 0.5-2	3-5.5 1.5-3.5	4-6.5 1.5-4	1-2 1-2	1-2.5 1-2
Pressure												
30 in.H_2O	750 mmH_2O	20	35	4.0-27	1.5-3.5	2.0-4.0	0.5-1.0	0.7-2.0	2.1-4.9	2.8-5.6	0.7-1.4	0.7-2.8
60 in.H_2O	1500 mmH_2O	20	35	5.0-54	1.5-4.	2.5-5.0	0.5-1.4	1.0-2.5	3-5.6	3.5-7.0	0.7-2.0	2-3.5
100 in.H_2O	2500 mmH_2O	20	35	8.5-90	2.0-5.5	4.0-8.5	1.0-2.0	1.4-3.0	4-7.7	5.6-11.7	1.4-2.8	2-4.2
150 in.H_2O	3750 mmH_2O	20	35	18-135	5.0-11	10-18	1.5-3.0	2.0-6.0	7.0-16	14-25.1	2.1-4.2	5-9.2
15 psi	1 kg/cm²	500	1500	2.5-13	1.0-1.5	1.0-2.5	0.5-1.0	0.75-1.5	1.4-2.1	1.4-3.5	.7-1.4	1-1.4
30 psi	2 kg/cm²	500	1500	3.0-27	1.0-2.8	1.0-3.2	.75-1.5	1-1.8	1.4-5	3-6	1-2.1	1.4-2.5
60 psi	4 kg/cm²	500	1500	5.0-54	2.0-4.0	2.0-4.5	1.0-2.0	1.0-2.5	3-7	4-8	1.4-2.8	1.4-3.5
100 psi	7 kg/cm²	1000	3000	10-90	3-6	5.0-10	1.0-2.5	1.4-3.2	7-12	7.0-14	1.4-3.5	3-7
200 psi	14 kg/cm²	1000	3000	18-180	7-14	10-18	1.0-4.0	5.0-8.0	10-23	14-25	1.4-5.6	7.0-11.2
400 psi	28 kg/cm²	2400	3000	45-360	16-30	16-45	4.0-8.0	5.0-15	22-42	22-63	5.6-11.2	7.0-21
600 psi	42 kg/cm²	2400	3000	75-540	16-50	20-75	5.0-15	6.0-25	22-70	28-105	7.0-21	8.0-35
1000 psi[10]	70 kg/cm²	12000	14000	160-900	75-130	50-160	7.0-30	10-85	70-180	70-223	10-42	14-119
2000 psi	140 kg/cm²	12000	14000	350-1800	150-200	150-350	20-50	25-110	209-279	209-488	28-70	35-154
3000 psi	210 kg/cm²	12000	14000	400-2600	180-250	180-400	30-70	30-190	251-349	251-558	42-98	42-226

DIFFERENTIAL PRESSURE SWITCHES

Nominal Range [1]		Overpressure Ratings: Static psi	Overpressure Ratings: Minimum Proof psi	Approximate Deadband[2,7] Switch Element (Buna-N Diaphragm): LDA-GDA[3] J, H	LDS-GDS[4] G	LDS-GDS[4] J, H	LDS-GDS[4] K, F	LDS-GDS[4] P	LDD-GDD[4] GG	LDD-GDD[4] JJ, HH	LDD-GDD[4] KK,FF	LDD-GDD[4] PP
Pressure												
30 in.H_2Od	750 mmH_2O	5.4	21.6	4.0-27	1.5-3.5	2.0-4.0	0.5-1.0	0.7-2.0	2.1-4.9	2.8-5.6	0.7-1.4	0.7-2.8
60 in.H_2Od	1500 mmH_2O	5.4	21.6	5.0-54	1.5-4.0	2.5-5.0	0.5-1.4	1.0-2.5	2.5-6	3.5-7.0	0.7-2.0	2-3.5
100 in.H_2Od	2500 mmH_2O	5.4	21.6	8.5-90	4.0-5.5	4.0-8.5	1.0-2.0	1.4-3.0	5.6-7.7	5.6-11.9	1.4-2.8	2-4.2
150 in.H_2Od	3750 mmH_2O	5.4	21.6	18-135	5.0-11	10-18	1.5-3.0	2.0-6.0	7.0-15.4	14-25.2	2.1-4.2	2.8-8.4
30 psid	2 kg/cm²	500	2000	3.0-27	1.0-2.5	1.0-3.0	1.0-1.5	1.0-1.8	2-5	3-6	1-2.1	1.4-2.4
60 psid	4 kg/cm²	500	2000	5-54	2-4	2-4.5	1-2	1-2.5	3-7	4-8	1.4-2.8	1.4-3.5
200 psid	14 kg/cm²	1000	4000	18-180	10-15	10-18	1.0-4.0	5.0-8.0	14-23	14-30	1.4-5.6	7.0-11.2
400 psid	28 kg/cm²	1000	8000	45-360	16-30	16-45	4.0-8.0	5.0-15	22.4-42	22.4-36	5.6-11.2	7.0-21.0

TEMPERATURE RANGE SELECTION

AdjustableRa nge °F	AdjustableRa nge °C	Max. Temp. °F	ApproximateD eadband[8] Switch Element: LTA-GTA[3] J, H	LTS-GTS[4] G	LTS-GTS[4] J, H	LTS-GTS[4] K, F	LTS-GTS[4] P	LTD-GTD[4] GG	LTD-GTD[4] JJ, HH	LTD-GTD[4] KK,FF	LTD-GTD[4] PP
–40 to 60	–40 to16	400	18-90	4.0-10	9.0-18	1.5-3	2-5	4-10	9.0-18	1.5-3	2-5
0 to 100	–20 to 40	400	30-90	5.0-15	10-30	1.5-5.5	3-7	5-15	10-30	1.5-4.5	3-7
75 to 205	20 to 95	400	34-120	6.0-18	10-34	3-5.5	3-8	6-18	10-34	3-5.5	3-8
150 to 260	65 to125	400	25-100	3-13	9.0-25	1.5-4	3-7	3-13	9.0-25	1.5-4	3-7
235 to 375	110 to 190	500	35-130	6-19	10-35	2-5.5	3-8	6-17	10-35	2-5.5	3-8
350 to 525[9]	175 to 275	700	40-165	5-27	15-40	3-7	3.5-11	5-27	15-40	3-7	3.5-11
500 to 750[6]	260 to 400	900	50-200	20-36	5-10	6-21	20-36	20-36	36-60	5-10	6-21

NOTES:

1. Switches may generally be set between 15% and 100% of nominal range on increasing pressure. Consult factory for applications where setpoints must be lower.
2. All deadbands are given in English units as shown in the nominal range column. Deadbands shown are for switches with Buna N diaphragm.
   Approximate deadbands for optional diaphragms:
   Viton: Multiply Buna N value by 1.4
   Teflon: Multiply Buna N value by 1.2
   Stainless Steel: Multiply Buna N value by 1.7
   Monel: Multiply Buna N value by 1.7
3. Deadbands for LTA, LPA and LDA are adjustable between the values shown for all diaphragm materials.
4. Deadbands for LPS, LPD, LDS, LDD, LTD, and LDS models are fixed within the range of values shown.
5. Switches can be set at increase or decrease throughout the nominal range.
6. Available with remote mount thermal system only.
7. Deadbands given are for zero static working pressure.
8. All deadbands given in °F.
9. Not available with 2¾″ stem.
10. Proof pressure is 4000 psi with stainless steel and monel welded diaphragms.

Consult factory for guidance in product selection
Phone (203) 378-8281 or visit our web site at
www.ashcroft.com

ASHCROFT®

Pressure, Differential Pressure and Temperature Switch Options for A, B, L, P, G, F, N, H Series

PRESSURE SWITCH OPTIONS (ALL SERIES)

OPTION CODE	DESCRIPTION	SWITCH SERIES A	B	L	P	G	F	N	H	NOTES
XBP	Wall mounting bracket (˝H_2O)		●	STD	STD	STD				
XBX	69C bushing (SS)									Assembled to capillary. Remote Temperature only.
XCH	Chained cover		●	●	●	●		●	●	
XCN	ATEX approval on 700 Series		●							
XC8	CSA approval	STD	●	STD	●	STD	STD			Standard on NEMA 4 enclosures. F series and A series.
XD2	Dual seal rating		●		●					
XFM	FM approval – Single element – Dual element		● ●	● ●						N/A on temperature switches.
XFP	Fungus proofing	●	●	●	●	●	●	●	●	
XFS	Factory adjusted setpoint		●	●	●	●	●	●	●	Setpoint must be given as well as increase or decrease.
XG3	Belleville actuator		●							Setpoint limits reduced to 30% to 100% of range.
XG5	Gas/oil UL limit differential pressure control to 150˝ H_2O		●	●						Buna N & Viton diaphragm only. B400 & LDS single setpoint only. N/A w/code 22, 32, P or J switch elements.
XG6	Gas/oil UL limit pressure control to 600 psi		●	●						Buna N and Viton diaphragm only.
XG7	Special actuator with redundant seal design (SS primary diaphragm)		●							B700 switch only. UL listed.
XG8	Steam limit pressure control to 300 psi		●	●						Stainless steel or Viton diaphragm only.
XG9	Fire safe actuator		●	●	●	●				Stainless steel diaphragm only.
XHS	High static differential		●	●	●					Available with Buna N and Viton diaphragms only. 15 psid and 30 psid only.
XHX	40 psi static pressure/dp only 160 psi proof pressure/dp only 100 psi proof pressure/press only Inches of water ranges		●	●	●	●				
XJK	Left side conduit connection		●	●				●	●	Standard on 700 series. N/A with DPDT element on 400s.
XJL	¾˝ to ½˝ conduit reducing bushing		●	●	●	●		●	●	
XK3	Terminal block		●	●	●	●	●			Terminal blocks standard with dual switches on B700 series. N/A on B400 series.
XLE	6 foot leads on the micro switch		●	●	●	●	●		●	
XMD	Metric range on label		●	●	●	●			●	Specify units to be printed on labels.
XNH	Stainless steel tagging	●	●	●	●	●	●	●	●	Specify tag information.
XNN	Paper tag		●	●	●	●	●	●	●	Specify tag information.
XPJ	24 Vdc pilot light(s) – Single – Dual		● ●	● ●					●	N/A on B700 series.
XPK	Pilot light(s), top mounted		●	●					●	N/A on B700 series.
XPM	¾˝ sealed conduit connection with 16˝ lead wires		●	●	●	●	STD		●	
XRN	Range scale		●							Standard on L, G, P & F series.
XTA	316 SS pressure port(s) for in H_2O ranges		●	●	●	STD				

ASHCROFT®

Pressure, Differential Pressure and Temperature Switch Options for A, B, L, P, G, F, N, H Series

PRESSURE SWITCH OPTIONS (ALL SERIES)

OPTION CODE	DESCRIPTION	SWITCH SERIES A	B	L	P	G	F	N	H	NOTES
XTM	2″ pipe mounting bracket		●	●	●	●		●		
XUD	316 stainless steel diff. press. conn.		●	●	●	STD				
XUX	IECEx approval (700 series)		●							
XO6	Pressure connection: ½ NPT male, ¼ NPT female combination		●	●	●	●	N/A	●		Standard with 1000, 2000 and 3000 psi ranges. Bottom connection only on D/P ″H_2O ranges.
XO7	Pressure connection: ½ NPT female		●	●	●	●	STD			
X2C	DPDT with single setpoint adjustment			●		●				Available with LPS, LDS, LTS, GPS, GTS and GDS models.
X3AY5	1.5″ Sanitary seal approved by 3A council		●	●		●				
X3AY6	2″ Sanitary seal approved by 3A council		●	●		●				
X6B	Cleaned for oxygen service	●	●	●	●	●	●	●		N/A with Buna N diaphragm.
	Diaphragm seals	●	●	●	●	●	●	●		
XNC	Normally Closed operation – with ground wire (NO wire omitted)	●					●			
XNO	Normally Open operation – with ground wire (NC wire omitted)	●					●			
XGO	Ground wire omitted	●					●			

ASHCROFT®

DDS-Series Differential Pressure Switch Diaphragm Sensing Element

The DDS-Series differential pressure switch is designed to sense low differential pressures between high pressure sources. The high pressure seals are opposed stainless steel bellows assemblies, while the differential pressure is sensed by a diaphragm clamped between these bellows assemblies.

The diaphragm has a large area to accurately sense low differential pressure, and during an over-pressure the diaphragm is fully supported.

The design is symmetric such that both the high or low pressure sides of the element can withstand the maximum pressure with the opposite side at atmospheric pressure. The rugged cast aluminum housing incorporates a "frictionless" switching mechanism, and can be specified as watertight or explosion proof. The housing is large enough to accommodate up to one full size SPDT or one DPDT electric switches.

250 psi DDS-Series Differential Pressure Switch

15000 psi DDS-Series Differential Pressure Switch

1 & 2 FUNCTION/ENCLOSURE

Code	Description
DDSN4 -	Single setpoint / fixed deadband Watertight NEMA 4X housing
DDSN7 -	Single setpoint / fixed deadband Explosion Proof, Class 1, Groups C & D, Class 2 Groups E, F & G

3 MICRO SWITCH

Code	Description
1G -	General Purpose, SPDT – 15A @ 125/250/480 VAC
2G -	General Purpose, DPDT – 15A @ 125/250/480 VAC
1K -	Narrow Deadband, SPDT - 15A @ 125/250/480 VAC
2K -	Narrow Deadband, DPDT – 15A @ 125/250/480 VAC
1M -	Gold Contact, SPDT –1 A @ 125 VAC
2M -	Gold Contact, DPDT – 1 A @ 125 VAC
1J -	Hermetically Sealed, SPDT - 1A @125 VAC, 1A @ 28 VDC resistive, 0.5A @ 28 VDC Inductive
2J -	Hermetically Sealed, DPDT - 1A @125 VAC, 1A @ 28 VDC resistive, 0.5A @ 28 VDC Inductive

4 ELECTRICAL CONNECTION

All models have 1¾ NPT Female conduit connection

Code	Description
S -	Screw Terminals on Micro Switch

5 ACTUATOR SEAL

Code	Description
B -	Buna N
V -	Viton (not available with 1500 psi static range H)
T -	Teflon

6 LOWER HOUSING MATERIAL

Code	Description
A -	Aluminum housing and process connections
S -	316 SS housing and process connections

7 PRESSURE CONNECTION

Code	Description
25 -	¼˝ NPT Female

8 STATIC PRESSURE RANGE

Code	Description
L -	250 psi maximum static pressure
H -	1500 psi maximum static pressure

9 STATIC PRESSURE SETPOINT

Code	Description
_____ -	Setpoint Static Pressure (5 characters maximum)
NSR -	No static sepoint required

10 RANGE

Inches of Water Differential	mBar Differential	mmH_2O Differential	kPa Differential
6IWD	15MBD	150MWD	1.5KPD
15IWD	35MBD	350MWD	3.5KPD
30IWD	75MBD	750MWD	7.5KPD
60IWD	150MBD	1500MWD	15KPD
100IWD	250MBD	2500MWD	25KPD
150IWD	350MBD	3500MWD	35KPD

11 & 12 SETPOINT/DIRECTION

Code	Description
_____R -	Factory-set Rising (Increasing) setpoint (5 characters maximum)
_____D -	Factory-Set Decreasing setpoint (5 characters maximum)
NSR -	Not factory set

13 OPTIONS

Code	Description
XNH -	Stainless Steel tag wired to case
XJK -	Dual ¾ NPT Female conduit connections
XC4 -	Certified Calibration Report

MAXIMUM DEADBAND I IWD PER MICRO SWITCH TYPE FOR 250 PSI STATIC RANGE

Range (IWD)	1K	1G	1M	1J	2K	2G	2M	2J
0-6	0.3	0.5	0.5	3.0	0.6	1.0	1.0	6.0
0-15	0.4	0.7	0.7	4.2	0.8	1.4	1.4	8.4
0-30	0.6	1.2	1.2	7.2	1.2	2.4	2.4	14.4
0-60	0.7	1.4	1.4	8.4	1.4	2.8	2.8	16.8
0-100	0.8	1.6	1.6	9.6	1.6	3.2	.2	19.2
0-150	1.2	2.5	2.5	15.0	2.4	5.0	5.0	30.0

MAXIMUM DEADBAND I IWD PER MICRO SWITCH TYPE FOR 250 PSI STATIC RANGE

Range (IWD)	1K	1G	1M	1J	2K	2G	2M	2J
0-6	1.1	2.2	2.2	6.6	2.2	4.4	4.4	13.2
0-15	1.2	2.3	2.3	6.9	2.4	4.6	4.6	13.8
0-30	1.2	2.3	2.3	6.9	2.4	4.6	4.6	13.8
0-60	1.3	2.5	2.5	7.5	2.6	5.0	5.0	15.0
0-100	1.5	2.9	2.9	8.7	3.0	5.8	5.8	17.4
0-150	1.7	3.4	3.4	10.2	3.4	6.8	6.8	20.4

TO ORDER THIS DDS-SERIES PRESSURE SWITCH DIAPHRAGM SENSING ELEMENT:

Part No.: **DDS N4 1G S B A 25 L 100# - 60IWD 15 R - XC4**

1. Function: **DDS**
2. Enclosure: **N4**
3. Micro Switch: **1G**
4. Electrical Connection: **S**
5. Actuator Seal: **B**
6. Lower Housing Material: **A**
7. Pressure Connection: **25**
8. Static Pressure Range: **L**
9. Static Pressure Setpoint: **100#**
10. Pressure Range: **60IWD**
11. Setpoint: **15**
12. Setpoint Direction: **R**
13. Options: **- XC4**

Consult factory for guidance in product selection
Phone (203) 378-8281 or visit our web site at
www.ashcroft.com

ACCESSORIES & OPTIONS

ACCESSORIES AND OPTIONS

Throttle Screws 261
Pulsation Dampener 261
Pressure Snubber 261
Steel Needle Valve 262
Siphons 262
Chemiquip Valve Snubber 263
Chemiquip Limiting Valve 263
Diaphragm Seals 263
Electric Warning Contacts 264
Conversion Kit 264
4½˝ Ring Wrench, Type A-1285 265
6˝ Ring Wrench, Type A-1286 265
2½˝ & 3½˝ Type 1009 Duralife Tools 265
Cone Tool, Type A-1287 266
Tool Kit, Type 1105T 266
Hand Jack Set, Type 3220 266
Cocks, 1092 Tea Handle 266
Cocks, 1094 Lever Handle Union 266
Cocks, 1095 Lever Handle 266
Test Gauge Carrying Case 2005 266
Options 267-268

Throttling Devices

A throttling device should be used when a pressure gauge is subjected to rapid pressure fluctuations, which make the gauge difficult to read because of rapid pointer movement. Such a device reduces pressure impact, slows the speed and range of pointer movement, and prolongs gauge life.

Throttling effect is obtained by installing a restricting orifice between the gauge socket connection and the Bourdon tube. Severe service applications are characterized by the presence of significant levels of pressure pulsation and/or vibration. Gauges should be protected from severe pressure pulsation by the inclusion of a dampener such as a throttle plug/screw or porous metal snubber. If the pulsation is extreme, a liquid-filled gauge, with dampener, should be used. A liquid-filled gauge will also last significantly longer than a comparable dry gauge when vibration is present. If the vibration levels are extreme, the only solution may be to remotely mount the gauge away from the source of vibration. In that case capillary tubing may be used to connect the gauge to the pressure source.

THROTTLE SCREWS

The simplest means of providing a restriction in the socket, a throttle screw or throttle plug, should be ordered with the gauge. Threaded or pressed into an instrument socket, the throttle screw orifice selected is based on the viscosity of the pressure fluid, rapidity of pressure fluctuations, and the amount of dampening effect desired.

A smaller orifice should be used for low viscosities, high frequencies, high pressure and reduced pointer amplitude. To accommodate these variables, throttle screws are available in these sizes: 0.0135, 0.020, 0.031, 0.040, and 0.070 inches, in brass and stainless steel. When orifice size or service condition is not specified, a 0.020-inch orifice will be supplied on Duragauge® pressure gauges and a 0.0135, on 25-35 1009 and 63 and 100mm 1008S.

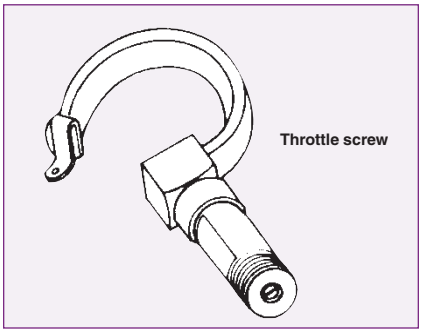

PULSATION DAMPENER

Threads onto a gauge socket and provides restriction by means of a moving pin, which may be placed in either of five different sized holes, and thus allows the user to vary the amount of dampening to suit requirements. The pulsating pressure moves the pin up and down, providing a self-cleaning action. Dampeners are shipped with a pin in the "middle" hole, and may be used in either a vertical or horizontal position. Maximum pressure is 5000 psi.

Type Number	NPT Conn.	Material	Weight (oz.)
25-1106B	¼	Brass	4
50-1106B	½	Brass	8
25-1106D	¼	Steel*	4
50-1106D	½	Steel*	8
25-1106S	¼	Stainless steel	4
50-1106S	½	Stainless steel	8

* Internal parts are stainless steel.

PRESSURE SNUBBER

Type Number	NPT Conn.	Material		Max psi Rating
		Housing	Filter Disc	
25-1112B	¼	Brass	316 stainless steel	10,000
50-1112B	½			
25-1112S	¼	303 stainless steel	316 stainless steel	15,000
50-1112S	½			
25-1112M	¼	R Monel	Monel	15,000
50-1112M	½			

Porosity	Max Pore Cap. Opening (Inches)	CFH at 1 psi Diff. Press.	For use with
D	0.005	6.5	Oil (50 to 500 S.S.U.)
E	0.0025	3.0	Water & Light Oils (Under 50 S.S.U.)
G	0.0008	1.1	Air, Steam and Gases
HX	0.0006	0.4	Mercury Manomometers

Used for dampening and filtering, the snubber has a metal disc available in four standard grades of porosity. The one best suited for the application can be selected from the chart, using the same guidelines as for throttle screws. Due to the large filter area, the snubber has less tendency to clog than orifice-type devices. All-metal construction permits the snubber to be washed in a variety of common solvents.

STEEL NEEDLE VALVE

The steel needle valve is an economical, adjustable throttling device for any severe gauge application. It provides the most practical means for varying the orifice to determine the exact orifice for any specific service condition. The valve has an internal seat and is of bar stock construction.

Dimension – Inches						
A NPT Conn.	B	C	D – min.	E	F	Weight oz.
¼	2⅛	⅞	2½	3	3⅛	8
½	2¼	1¼	2½	3 1/16	3 3/16	21

NPT Conn.	Type Numbers Lock Bonnet Type Valves	Material	Pressure Ratings Noncorrosive Service (psi) 100°F	550°F	850°F	1000°F
¼	25-7001L	Carbon steel with 12-14% chrome	10,000	7735	—	—
½	50-7001L	Stainless steel stem				
¼	25-7004L	316 stainless steel	7000	4500	3895	3535
½	50-7004L					

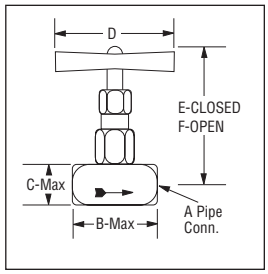

SIPHONS

In order to prevent live steam from entering a pressure gauge Bourdon tube, a siphon filled with water should be installed between the gauge and the process line. If freezing of the condensate in the loop of a siphon is a possibility, a diaphragm seal should be used to isolate the gauge from the process steam. Also use siphons whenever condensing hot vapors (not just steam) are present.

- Pig Tail Siphon–Number 1100 Series, ¼″ sizes: to 500 psi and 400°F.
- Coil Pipe Siphon–Number 1098 Series, ¼″, ½″ sizes: to 9550 psi and 400°F.

Type 1100

Type 1098

Type Number	NPT Conn.	Material	Capacity
25-1098 I	¼	Iron	500 psi @ 400°F
25-1098 B	¼	Brass	250 psi @ 400°F
25-1098 S	¼	ASTM A-106 seamless steel, Grade A	338 psi @ 1000° to 3360 psi from –20° to 400°F
50-1098 S	½	ASTM A-106 seamless steel, Grade A	333 psi @ 1000°F to 3000 psi from –20° to 400°F
50-1098 SD	½	ASTM A-106 seamless steel, Grade A	420 psi @ 1000°F to 3740 psi from –20° to 400°F
50-1098 CD	½	ASTM A-213 seamless steel, Grade T 22	1048 psi @ 1200°F to 9550 psi from –20° to 400°F
50-1098 NS	½	Seamless stainless steel, Type 316	294 psi @ 1500°F to 3981 psi from –20 to 100°F
50-1098 ND	½	Seamless stainless steel, Type 316	336 psi @ 1500°F 5840 psi from –20° to 100°F
25-1100 A	¼	Stainless steel	500 psi @ 400°F
25-1100 I	¼	Iron – 6⅜″ Long	
25-1100 IL	¼	Iron – 8″ Long	
25-1100 IN	¼	Iron – Angle	
25-1100 B	¼	Brass – 5⅜″ Long	250 psi @ 400°F
25-1100 BL	¼	Brass – 8″ Long	

CHEMIQUIP PRESSURE LIMITING VALVE SNUBBER

Type Number	Conn.	Material	Available Ranges
25-255B(1)	¼ NPTF	Brass	10-150 psi(2) 150-500 psi 500-1000 psi 1000-3000 psi
25-255S(1)	¼ NPTF	303 SS	
50-2550D(3)	½ NPTF	316 SS	

(2) Specify porosity designation.
(3) Use code XFS for factory setting.
(4) Meets NACE MR01-75 requirements.

Assures positive, repeatable performance of the instrument by protecting against surges and pulsations. Automatically shuts off when overpressure occurs and is restored when pressure falls below preset values.

CHEMIQUIP PRESSURE LIMITING VALVE (4)

Type Number	Conn.	Material	Available Ranges(1)	Style
25-5460	¼ NPTF	303 SS	100-800 psi 800-2500 psi 2500-10,000 psi 10,000-18,000 psi	L M N O
50-5500	½ NPTF	303 SS		

(1) Use code XFS for factory setting.

Protects pressure instruments against surges and pulsations. Provides automatic positive protection and accurate, repeatable performance. Automatic pressure shut-off. Built-in snubber enhances instrument, protecting performance.

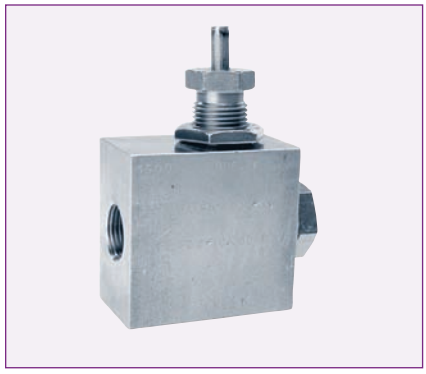

Type of Service	Porosity Designations
High viscous fluids (over 500 S.S.U.)	C
Oil (225-500 S.S.U.)	D
Water and light oils (30-225 S.S.U.)	E
Vapor and low viscosity fluids (Below 30 S.S.U.)	F
Air or other gases	G
Extreme gas pulsations	HX

DIAPHRAGM SEALS

Designed for use with pressure gauges or switches or transmitters on process applications where:

- Process element materials capable of withstanding corrosive effects of certain fluids are not available.
- The process fluid being measured would normally clog the pressure measuring element.
- The process fluid in the measuring element might freeze due to changes in ambient temperatures.

A diaphragm assembly fabricated of materials that will withstand various corrosive media encountered, separates the measuring element from the process fluid. Since the space between the diaphragm and the measuring element is solidly filled with liquid, any movement of the diaphragm caused by a change in the process pressure will be indicated by the instrument.

Ashcroft diaphragm seals are normally mounted directly to the socket of an instrument. A flexible stainless steel armored line assembly, is available for mounting the gauge at some point away from the seal location to provide easy reading or to limit the temperature at the gauge to 150°F maximum.

Diaphragm seals (isolators) with filled, capillary line assemblies are another good solution to the problem of hot liquid and gas lines. Due to the small diameter of the flexible line (capillary) a five foot line length will usually assure that the temperature of the gauge connection does not exceed 150°F. This solution is also superior to a siphon on steam service where the water filled siphon might freeze.

ELECTRIC WARNING CONTACTS

The Ashcroft® 2265 electric contact is an ideal accessory to turn on a signal light, sound an alarm, or operate a pump or valve. The contacts can easily be set so that a circuit can be closed or opened at a desired pressure or temperature.

Settings can be easily made in the field without removing the instrument from service. Contact adjustment is made externally with a removable key to make the instrument virtually tamper proof.

The contact is designed for easy installation on Types 1279, 1377 and 1379 Duragauge pressure gauges (either stem or flush mounted), Type 1125 differential pressure gauges, or Type 600A Duratemp dial thermometers.

Contacts are equipped with adjustable magnets to eliminate chatter caused by vibration. A plug-in connector with five feet of electrical cable is standard.

Use with Ashcroft Model No.	Description	Availability			
		Code		Mounting	
		45	60		
		4½″ Dial	6″ Dial	Stem	Flush
1279	Duragauge	X	—	X	X[1]
1377	pressure	X	X	—	X
1379	gauge	X	X	X	X[1]
1125	D/P ugga	X	X	X	X
				Surface	Flush
600A-02	Duratemp	X	X	—	X
600A-03	remote	X	X	X	X
600A-04	thermometer	X	X	X	X

[1] Flush mounting requires type 1278 flush mounting ring.
All specifications are subject to change without notice.

Model	Code	Contact arrangements
2265	XED	High and low contact
	XEE	Double high contact
	XEF	Double low contact
	XEG	"OFF" at low and high, and "ON" in between

Indicating accuracy of Ashcroft Duragauge, above 300 psi with contact: Pointer not carrying contact – 1.0%.
Pointer carrying contact – 1.5%. For ranges below 30 psi, add an additional ½% to indicating accuracies.

CONVERSION KIT

For field converting 4½″ 1279(*)S and 4½″ and 6″ 1379(*)S Duragauge® gauges to a sealed case design suitable for either hermetic sealing or liquid filling. Kit includes (Typical A1280 kit shown):

- O-ring for front case seal.
- Acrylic window.
- Elastomeric diaphragm (Buna-N) for rear case seal.
- Glass filled polypropylene threaded ring for rear of case.
- 302 stainless steel rear cover and mounting screws.
- 303 stainless steel and Monel throttle screws.

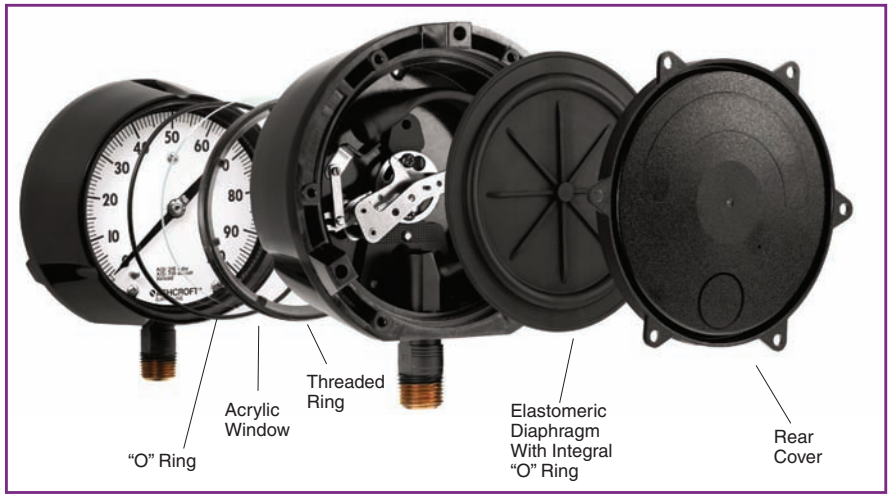

HOW TO ORDER THIS CONVERSION KIT

FOR:
4½″ 1279, lower connected – order part no. 101A202-01.
4½″ 1279, back connected – order part no. 101A2023-01.
4½″ 1379, lower connected – order type A1280 Kit.
4½″ 1379, back connected – order type A1283 Kit.
6″ 1379, lower & back connected – order type A1284 Kit.

ELECTRICAL CONTACT SWITCHING CAPACITY

250V Maximum Voltage
30 WDC Maximum Switching Power
50 VA AC Maximum Switching Power
1A Maximum Current

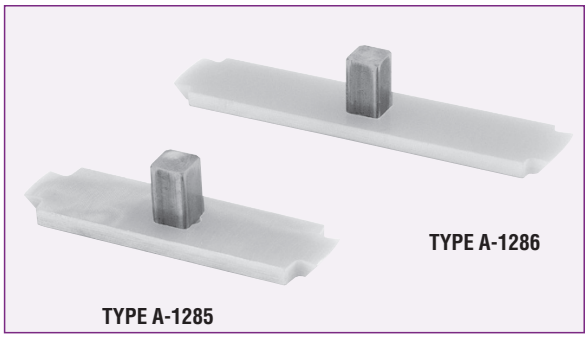

TYPE A-1285

Ring Wrench – 4½˝

(For installing front threaded rings in 4½˝ Duragauge gauge)

TYPE A-1286

Ring Wrench – 6˝

(For installing front threaded rings in 6˝ Duragauge gauge)

2½˝ & 3½˝ TYPE 1009 DURALIFE TOOLS

2½˝ Ring wrench
old design
PN 266B135-01

Pointer puller body
P/N 292A133-01

Pointer puller screw/pin
P/N 112A381-01

Pointer staker
P/N 188A101-01

3½˝ Nest current design
PN 101B220-01

3½˝ Ring removal
current design
PN 101B221-01

2½˝ Ring removal
current design
PN 101B221-02

2½˝ Nest current design
PN 101B220-02

3½˝ Ring wrench
old design
PN 266B134-01

Span wrench
old design
P/N 266A137-01

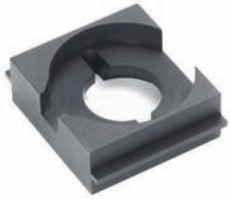

2½˝ & 3½˝ Nest old design
PN 266B136-01

TYPE A-1287

Cone Tool

For installing diaphragm and garter spring on back connected liquid-filled or hermetic sealed Duragauge® gauges.

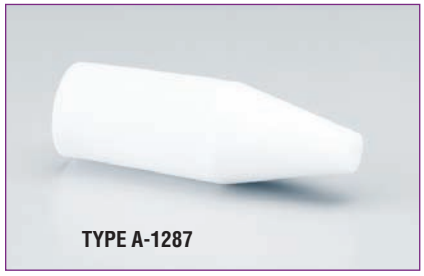

TYPE A-1287

TOOLS

Hand Jack Set – gauge pointer remover and a pointer set to secure pointer to the shaft. Type No. 3220.

Gauge Tool Kit – A complete kit for gauge maintenance. Includes hand jack set, screw driver, five reamers, pin vise holder, wiggler and tweezer all packed in a neat carrying case. Ideal for a gauge maintenance shop. Type No. 1105T.

TYPE NO. 3220

TYPE NO. 1105T

COCKS

- ¼″ brass Tee Handle Cock No. 1092 – Wgt. 3 oz.
- ¼″ brass Lever Handle Union Cock No. 1094 – Wgt. 10 oz.
- ¼″ brass Lever Handle Cock No. 1095 – Wgt. 4 oz.
- All rated 100 psi air.

TYPE NO. 1095

TYPE NO. 1094

TYPE NO. 1092

TEST GAUGE CARRYING CASE

This rugged blow-molded high-density polyethylene carrying case accommodates the standard 4½″, 6 & 8½″ Ashcroft Type 1082 analog test gauge. It accepts both lower and back connect gauges. A foam insert protects the gauge when not in use. Type No. 2505.

ASHCROFT®

Options for Process, Stainless Steel, Test and Industrial Pressure Gauges

CODE	DESCRIPTION	PRESSURE GAUGE TYPE							
	PLUS! Performance	DURAGAUGE GAUGES	1259	1009 (2½", 3½")	1009 (4½", 6")	1008S	TEST GAUGES	1010, 1017, 1220	1490/1495 SERIES
XLL	***PLUS!*** Performance	●		●	●	●(1)			
XBF	Wall mounting bracket				●				
XFW	Back flange			●					
XFF	Front flange			●	●	●			
XUC	U-clamp			●	●	●		●	●
XLJ	Dry liquid-fillable gauge	●	●	●	●	●			
XOS	Overload stop	●	●	STD	●	(3)	STD	●	
XVS	Underload stop	●	●	STD	●	(3)	STD	●	
XTS	Throttle screw	●	●	●	●	●	●	●	●
XTU	Throttle plug			●		●			●
XS4	Slotted link movement (decrease)	●			●			●	
XRJ	Slotted link (increase)	●			●			●	
XAP	Adjustable pointer				●			●	
XMP	Micrometer pointer	STD	STD	●	●			●	
XSH	Red set hand stationary	●		●	●			●	
XEO	Red set hand adjustable	●			●		●	●	
XEP	Maximum pointer	●			●		●	●	
XEQ	Minimum pointer	●			●		●	●	
XPD	Plastic window	●	●	STD	●	STD(2)	●	●	STD
XSG	Safety glass	●	●	●	●		●	●	
XRG	Regular glass	STD	STD		STD		STD	STD	
XDA	Dial marking	●	●	●	●	●	●	●	●
XNN	Paper tag	●	●	●	●	●	●	●	●
XNH	Stainless steel tag	●	●	●	●	●	●	●	●
XAB	Absolute pressure	●			●				
XAJ	½% optional accuracy	STD	STD		●			●	
XAN	1% optional accuracy			STD	STD				●
XBD	Black dial	●		●	●	●	●	●	●
X6B	Oxygen-cleaned gauges (gaseous)	●	●	●	●	●	●	●	
XTB	Tip bleed	●			●		●		
XED	High and low electric contacts	●							
XEE	Double high-electric contacts	●							
XEF	Double low-electric contacts	●							
XEG	Electric contacts off at low or high and in-between	●							
XGV	Silicone-filled gauge	●		●	●	●			
XGX	Halocarbon-filled gauge	●		●	●	●			
XCH	Carrying handle						●		
XC4	Calibration Chart	●		●	●	●	●	●	●

NOTES:
The options listed above are only a partial listing. For other options on these or other pressure instruments please call the factory for availability.
(1) Available on 63mm and 100mm.
(2) Available on 40mm and 50mm. Standard window material is glass for 40/50mm 1008S.
(3) Standard 63 & 100mm.

STATIONARY RED SET HAND

Stationary Red Set Hand
to indicate a specific pressure. Ring must be removed to move the hand.

OVERLOAD STOP

Overload Stop
to protect gauge system against extreme overpressure.

SPECIAL DIAL

Special Dial
ranges different from standards, or custom artwork, available on application.

MAXIMUM POINTER

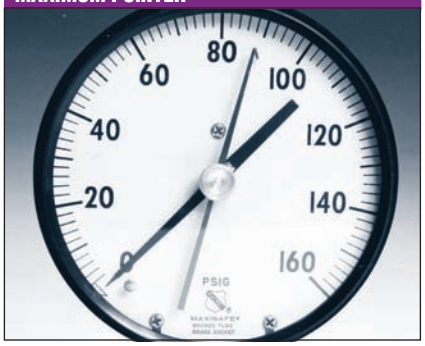

Maximum Pointer
available for gauges 4½″ size and larger. Indicates maximum pressure attained. Can be reset by a knob on outside of window.

VACUUM STOP

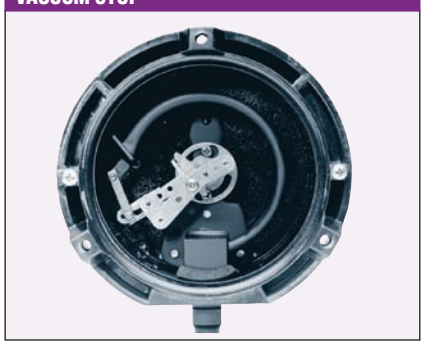

Vacuum Stop
to protect low range gauges against vacuum.

OPTIONAL WINDOWS

Plastic Disc – optional for glass window
Laminated Safety Glass – optional for glass window
Nonglare Glass – optional for glass window

TIP BLEEDER

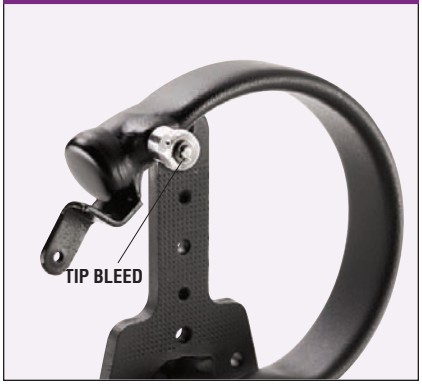

These bleeders allow trapped air to be removed from the Bourdon tube. They can also be used for back-flushing or cleaning the system. The tip bleed is available with 316 stainless steel systems. It is accessible by removing the pressure relief back. Tip bleeders are available to 23,000 psi. The capillary bleeder provides an external case connection to the internals

CAPILLARY BLEEDER

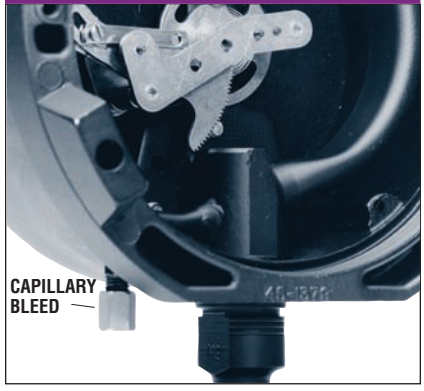

of the Bourdon tube. It may be used as a pressure testing tap for gauge inspection without removing the gauge from service. Capillary bleeders are available in bottom connected gauges only. The capillary bleeder is available in 300 Series stainless steel and limited to 4½″ 1379(S)S case with 316 stainless steel system. Capillary bleeders are available to 1000 psi.

TYPE 1278M FLUSH MOUNTING RING

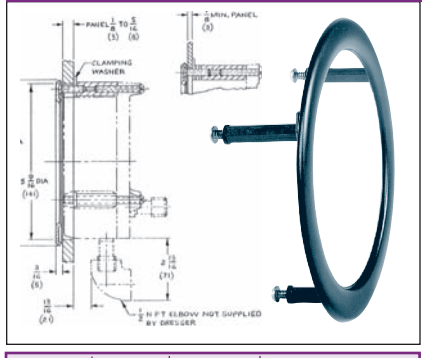

Gauge Size (inches)	Ring O.D. (inches)	A Dia. (inches)	"B"-Three Screws Size
4½	6.000	5.625	#10-24 x 1⅝″
6	7.765	7.25	¼-20 x 1½″

Used to flush-mount gauge types 1188, 1220, 1279 and 1379. Standard finish is black; polished stainless steel finish is available at an extra charge, 4½″ and 6″.

Consult factory for guidance in product selection
Phone (203) 378-8281 or visit our web site at
www.ashcroft.com

APPLICATION DATA

Pressure Element Selection
Media Application 271

Conversion Factors for
Units of Pressure 272

Mechanical Pressure Gauge
Accuracy Definitions 273

Bimetal Thermometer
Accuracy Definitions 274

NEMA Chart 275

Pressure Transducers/Transmitters
Accuracy Definitions 276-277

ASHCROFT®

Pressure Element Selection
Media Application

The media being measured must be compatible with the wetted parts of the pressure instrument. To use the chart below, locate the media whose pressure is to be measured and select a suitable material from those available. This is a simplified chart and assumes the media temperature is below 200°F except for media with a "•" which must be below 100°F. ***PLUS!***™ option, throttling devices and/or a liquid-filled instrument are recommended in applications with pulsation or vibration. These recommendations are only a guide, as service life is dependent on temperature, concentrations, catalysts that may be added, or other conditions beyond our control. Consult Stratford, CT customer service for specific applications and any media not listed. More complete corrosion data is available on our web site, **www.ashcroft.com** in Technical Information.

	Pressure Instrument Material				
MEDIA APPLICATION	Brass or bronze	Steel	316 SS	Monel	Diaphragm seals**
Acetic Acid <40%			•		
Acetic Anhydride					•
Acetone*	•		•	•	
Acetylene (Dry)		•	•		
Acrolein 100%					•
Air	•	•	•	•	
Alcohol, Ethyl	•		•	•	
Alum. Chloride*					•
Alum. Sulfate* <50%					•
Ammonia Gas (Dry)		•	•		
Ammonium Chloride <40%					•
Ammonium Nitrate <50%			•		
Ammonium Sulfate <60%					•
Aniline >99%			•		
Beer			•		
Benzene <50%			•	•	
Benzidine >99%					•
Benzoic Acid <70%					•
Boric Acid <25%			•		
Bromine (Dry) >99%					•
Butane	•	•	•	•	
Butyric Acid <10%					•
Calcium Chloride <80%					•
Calcium Hydroxide <50%					•
Carbon Dioxide* (Wet)			•	•	
Carbon Monoxide (Dry) >99%	•		•	•	
Chlorine (Dry)					•
Chlorine (Moist)					•
Chloroform (Dry)			•	•	
Chromic Acid					•
Citric Acid 10-50%			•		
Crude Oil (Sour)				•	
Crude Oil (Sweet)			•	•	
Ethyl Acetate	•		•	•	

	Pressure Instrument Material				
MEDIA APPLICATION	Brass or bronze	Steel	316 SS	Monel	Diaphragm seals**
Ethylene Oxide >99%*	•		•	•	
Ferric Chloride <40%					•
Ferric Sulfate <10%			•		
Ferrous Chloride <30%					•
Ferrous Sulfate <50%					•
Fluorine Gas (Dry) No Air				•	
Formaldehyde <90%			•	•	
Formic Acid*					•
Furfural <10%					•
Gasoline (Flowing)	•		•		
Glycerin >99%	•	•	•	•	
Hydrobromic Acid					•
Hydrochloric Acid					•
Hydrofluoric Acid					•
Hydrofluosilic Acid					•
Hydrogen[2]	•		•		
Hydrogen Peroxide* <30%			•		•
Kerosene	•	•	•	•	
Lactic Acid <70%*[2]			•		
Magnesium Chloride <40%					•
Mercury >99%			•		
Milk			•		
Naphtha 99%	•	•	•	•	
Naphthalene >99%			•	•	
Nickel Chloride >99%					•
Nitric Acid <95%*			•		
Oleic Acid					•
Oxalic Acid*					•
Oxygen (Gas)[1]	•		•	•	
Palmitic Acid >99%*			•		
Phosphoric Acid <60%*			•		
Picric Acid <10%			•		
Propane (Dry) DOT Quality	•	•	•	•	
Sea Water (Flowing)				•	

	Pressure Instrument Material				
MEDIA APPLICATION	Brass or bronze	Steel	316 SS	Monel	Diaphragm seals**
Silver Nitrate <70%					•
Sodium Bicarbonate <20%			•	•	
Sodium Bisulfate <30%					•
Sodium Carbonate <40%			•	•	
Sodium Chloride (table salt)				•	
Sodium Chromate <60%	•	•	•	•	
Sodium Cyanide*		•	•		
Sodium Hydroxide <40%			•	•	
Sodium Hypochlorite <25%					•
Sodium Phosphate,Tri <60%		•	•	•	
Sodium Silicate <50%		•	•	•	
Sodium Sulfide <50%					•
Stannous Chloride <10%					•
Steam (Use siphon)	•	•	•	•	
Stearic Acid			•		
Sulfur Dioxide (Dry) >99%					•
Sulfur Trioxide (Dry) >99%					•
Sulfuric Acid					•
Tannic Acid <80%		•	•	•	
Tartaric Acid <50%			•	•	
Toluene >99%	•	•	•	•	
Turpentine >98%	•	•	•	•	

(1) Monel and 316 stainless steel are acceptable for oxygen service, provided the instrument has been cleaned for service and is free from oil. Order variation X6B.

(2) Over 1000 psi–entire system must be 316 stainless steel.

*Media temperature must be below 100°F.

**Any standard Bourdon tube or bellows material may be used in conjunction with a diaphragm seal (with bellows use a Viton or Kalrez diaphragm), but the gauge selection should take into consideration the corrosive environment in which it is to operate.

ASHCROFT®

Conversion Factors for Units of Pressure

CONVERT FROM TO ➤ / ▼	psi	atms.	˝ H_2O	mm H_2O	cm H_2O	oz/in^2	Kg/cm^2	˝ Hg	mm Hg (Torr)	cm Hg	mbar	bar	Pa (N/m^2)	kPa	MPa
psi	1	0.0681	27.71	703.8	70.38	16	0.0704	2.036	51.715	5.17	68.95	0.0689	6,895	6.895	0.0069
atms.	14.7	1	407.2	10,343	1,034.3	235.1	1.033	29.92	760	76	1013	1.013	101,325	101.3	0.1013
˝ H_2O	0.0361	0.00246	1	25.4	2.54	0.5775	0.00254	0.0735	1.866	0.187	2.488	0.00249	248.8	0.249	0.00025
mm H_2O	0.001421	0.000097	0.0394	1	0.1	0.0227	0.0001	0.00289	0.0735	0.00735	0.098	0.000098	9.8	0.0098	0.00001
cm H_2O	0.01421	0.000967	0.3937	10	1	0.227	0.001	0.0289	0.735	0.0735	0.98	0.00098	98	0.098	0.0001
oz/in^2	0.0625	0.00425	1.732	43.986	4.40	1	0.0044	0.1273	3.232	0.3232	4.31	0.00431	431	0.431	0.00043
Kg/cm^2	14.22	0.968	394.1	100,010	1,001	227.6	1	28.96	735.6	73.56	980.7	0.981	98,067	98.07	0.0981
˝ Hg	0.4912	0.03342	13.61	345.7	34.57	7.858	0.0345	1	25.4	2.54	33.86	0.0339	3,386	3.386	0.00339
mm Hg (Torr)	0.01934	0.001316	0.536	13.61	1.361	0.310	0.00136	0.0394	1	0.1	1.333	0.001333	133.3	0.1333	0.000133
cm Hg	0.1934	0.01316	5.358	136.1	13.61	3.10	0.0136	0.394	10	1	13.33	0.01333	1,333	1.333	0.00133
mbar	0.0145	0.000987	0.4012	10.21	1.021	0.2321	0.00102	0.0295	0.75	0.075	1	0.001	100	0.1	0.0001
bar	14.504	0.987	401.9	10,210	1021	232.1	1.02	29.53	750	75	1,000	1	100,000	100	0.1
Pa (N/m^2)	0.000145	0.00001	0.00402	0.102	0.0102	0.00232	0.00001	0.000295	0.0075	0.00075	0.01	0.00001	1	0.001	0.000001
kPa	0.14504	0.00987	4.019	102.07	10.207	2.321	0.0102	0.295	7.5	0.75	10	0.01	1,000	1	0.001
MPa	145.04	9.869	4019	102,074	10,207	2321	10.2	295.3	7500	750	10,000	10	1,000,000	1,000	1

ASHCROFT®

Mechanical Pressure Accuracy Definitions

ACCURACY:

Accuracy – the conformity of indication to an accepted standard or true value. Accuracy is the difference (error) between the true value and the indication expressed as a percent of the span. It includes the combined effects of method, observer, apparatus and environment. Accuracy error includes hysteresis and repeatability errors but not friction error. It is determined under specific conditions. (Normal position, 73.4°F (23°C), and 29.92 in Hg barometric pressure.)

The following tables define the ASME B40.1* accuracy grades used by Ashcroft products.

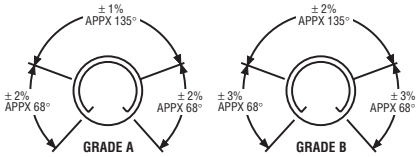

Accuracy of a pressure gauge may be expressed as percent of span or percent of indicated reading. Percent of span is the most common method. Percent of indicated reading is usually limited to precision test gauges and unless specifically spelled out, it may be assumed that an accuracy of ±½% means ±½% of span.

GRADE 4A:
gauges offer the highest accuracy and are calibrated to ±0.1% of span over the entire range of the gauge. The gauges are called laboratory precision test gauges and are generally 8½″, 12″ or 16″ dials. These high-accuracy gauges may be temperature compensated. They must be handled carefully in order to retain accuracy.

GRADE 3A:
gauges are calibrated to an accuracy of ±0.25% of span over the entire range of the gauge. The gauges are called test gauges and are generally 4½″, 6″ or 8½″ dials. The gauges are generally not temperature compensated (except Ashcroft Type 1082).

GRADE 2A:
gauges are calibrated to an accuracy of ±0.5% of span over the entire range of the gauge. These gauges are generally used by the petrochemical industry for process pressure measurement. They are often referred to as process gauges and are usually supplied as 4½″ and 6″ cases and are not temperature compensated.

GRADE 1A:
gauges are calibrated to an accuracy of ±1% over the entire range of the gauge. These gauges are high-quality industrial gauges and are supplied in 2½″, 3½″ and 4½″ sizes.

GRADE A:
gauges are calibrated to an accuracy of ±1% of span over the middle half of the scale and ±2% of span over the first and last quarters of the scale. These gauges are often referred to as industrial gauges and are usually supplied in 2½″, 3½″ and 4½″ case sizes.

GRADE B:
gauges are calibrated to an accuracy of ±2% of span over the middle half of the scale and ±3% of span over the first and last quarters of the scale. This accuracy of gauge represents the majority of those manufactured and used for pressure measurement on water pumps, swimming pool filters, air compressors, filter regulations, etc. These gauges are often referred to as commercial or utility gauges and are supplied in 1½″, 2″, 2½″, 3½″ and 4½″ case sizes.

GRADE C:
gauges are calibrated to an accuracy of ±3% of span over the middle half of the scale and ±4% of span over the first and last quarters of the scale. These are used in similar applications as Grade B gauges except that they are less accurate.

GRADE D:
gauges are calibrated to an accuracy of ±5% of span over the entire scale. These 5% gauges are used as indicators when minimal accuracy is required for application on water pumps and pool filters.

ACCURACY EXAMPLES

Range	Accuracy Span	Grade	Permissible Error % of Span	Dial Units
0/100 psi	100 psi	1A	1.0	1 psi
0/400 kPa	400 kPa	2A	0.5	2 kPa
0/1000 bar	1000 bar	B	3 (0/250 & 750/1000 bar)	30 bar
			2 (250/750 bar)	20 bar
–100/400	400 kPa	2A	0.5	2 kPa
30 in.Hg/	44.7 psi	4A	0.1	.045 psi
30 psi				.022 in.Hg

The last item (30 in. Hg/30 psi)deserves some explanation. The span is defined as the algebraic difference between the limits of the scale. 30 in. Hg = –14.7 psi Span = 30 psi -(–14.7) = 44.7 psi. 0.1% of 44.7 psi = .045 psi or .022 Hg.

***ASME B40.1 may be ordered from:**
American Society of Mechanical Engineers
Three Park Avenue, New York, NY 10016

ACCURACY EXAMPLES

Type of Gauge	Grade	Permissible Error % of Span: Lower 25%	Middle 50%	Upper 25%	Max. Friction (% of Span)
Precision Test (A4A)	4A	0.1	0.1	0.1	See Note
Test (1082)	3A	0.25	0.25	0.25	0.25
Process (1279)	2A	0.5	0.5	0.5	0.5
Industrial/ Hydraulic (1009)	1A	1.0	1.0	1.0	1.0
Industrial/ Hydraulic (1010, 1188, 1490)	A	2.0	1.0	2.0	1.0
Commercial/ Utility (1005, 3005, 1008A)	B	3.0	2.0	3.0	2.0

Note: Grade 4A gauges must remain within 0.1% before and after being lightly tapped.

ASHCROFT®

Bimetal Thermometer Accuracy Definitions

ASME B40.3* STANDARD ACCURACIES:

Example #1: Range 0/250°F Grade A
Span = 250-0 = 250°F
Accuracy at 20% of span (50°F) = ±1% = ±2.5°F
Accuracy at 50% of span (125°F) = ±1% = ±2.5°F
Accuracy at 100% of span (250°F) = ±1% = ±2.5°F

Example #2: –40/160°F Grade E
Span = 160-(–40) = 200°F
Accuracy at 20% of span (0°F) = ±3.4% = ±6.8°F
Accuracy at 50% of span (60°F) = ±1% = ±2.0°F
Accuracy at 100% of span (160°F) = ±5% - ±10.0°F

Example #3: Range 50/300°F Grade AA
Span = 300-(–50) = 250°F
Accuracy at 0% of span (50°F) = ±1% = ±2.5°F
Accuracy at 50% of span (175°F) = ±0.5% = ±1.25°F
Accuracy at 70% of span (225°F) = ±0.7% = ±1.75°F

ACCURACY:
Thermometer accuracy is graded as shown in the table below. Adjustment of the case of a thermometer, with an adjustable angle connection, may affect its accuracy. This effect should not exceed 0.5% of span .

*ASME B40.3 may be ordered from:
American Society of Mechanical Engineers
Three Park Avenue
New York, NY 10016

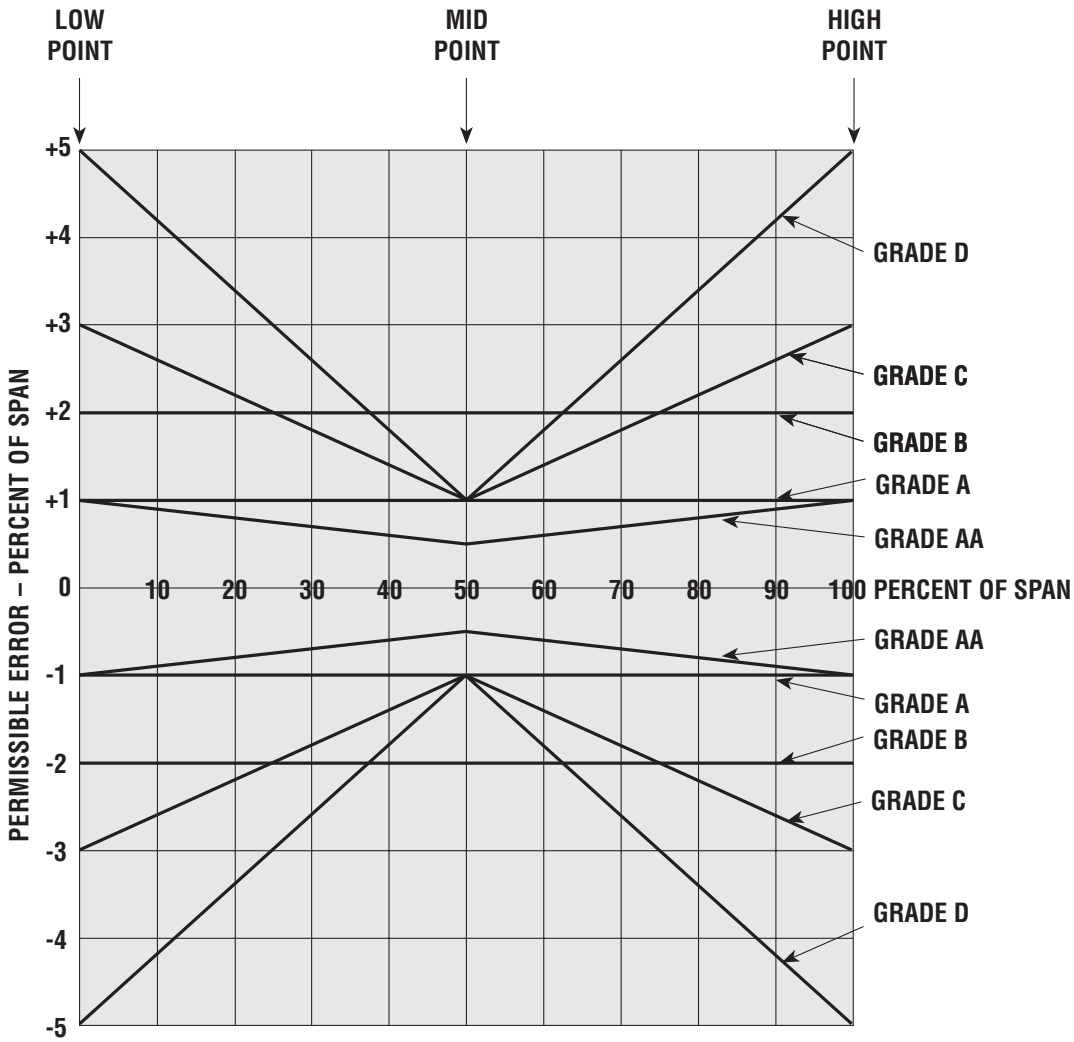

– TABLE 1 –

Primary enclosure characteristics of NEMA standard 250-1979 and equivalents in DIN standard 40050

STANDARDS		PROTECTION LEVEL
IP20	***NEMA 1***	***Fingers***
IP22	NEMA 2	Falling dirt and water
IP53	NEMA 3	Windblown dust, rain, sleet
	NEMA 3R	Falling rain and sleet
	NEMA 3S	Windblown dust, rain, sleet, mechanisims operate when iced over
IP65	***NEMA 4***	***Hosedown***
	NEMA 4X	***Hosedown and corrosion***
	NEMA 5	Dust and falling dirt
IP67	***NEMA 6***	***Temporary submersion***
IP68	NEMA 6P	Occasional prolonged submersion and corrosion
	NEMA 7	Indoor hazardous Class I, Groups A, B, C or D
	NEMA 8	Indoor hazardous Class II, Groups A, B, C or D
	NEMA 9	Indoor hazardous Class II, Groups E, F, G
	NEMA 10	Mine safety
	NEMA 11	Oil seepage and corrosion
	NEMA 12	***Oil seepage***
	NEMA 12K	Oil seepage, has knockouts
	NEMA 10	***Oil sprays***

**Types of greatest interest are italicized.*

ASHCROFT®

Pressure Transducers/ Transmitters Accuracy Definitions

ACCURACY:
Accuracy is defined as the degree of conformity of a measure to an accepted standard or true value. It is a measure of the actual output deviation from the standard or true value reported as a percentage (±) of output span. Accuracy does account for the effects of linearity, hysteresis and repeatability. In addition, the maximum errors of these effects for Ashcroft Transducers are reported separately.

LINEARITY –
BEST FIT STRAIGHT LINE (B.F.S.L.)
The linearity defined as the maximum deviation of the calibration curve (average of upscale and downscale readings) from a straight line so positioned as to minimize the maximum deviation. It is specified as ±% of span.

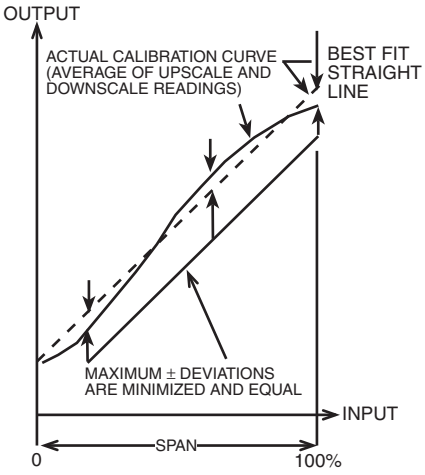

LINEARITY – TERMINAL POINT (T.P.)
The linearity defined as the maximum deviation of the calibration curve (average of upscale and downscale readings) from a straight line positioned to pass through the upper and lower range values. It is specified as ±% of span.

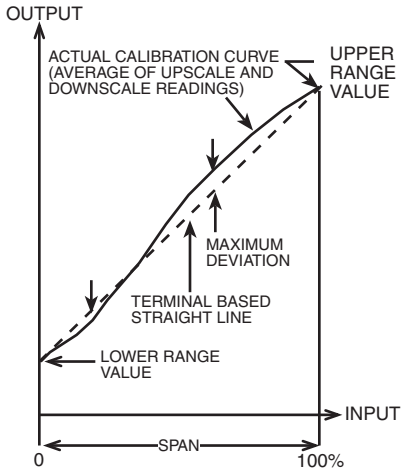

HYSTERESIS
The maximum difference in output ("a" below) within the range when the value is approached with increasing pressure and then with decreasing pressure for full range traverses. It is specified as ±% of span.

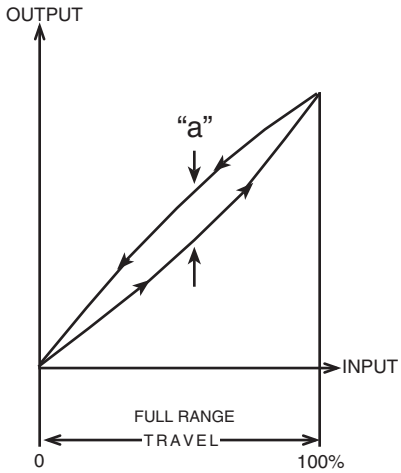

REPEATABILITY
The closeness of agreement among a number of consecutive measurements of the output for the same value of the input under the same operating conditions, approaching from the same direction, for full range traverses. It is specified as ±% of span.

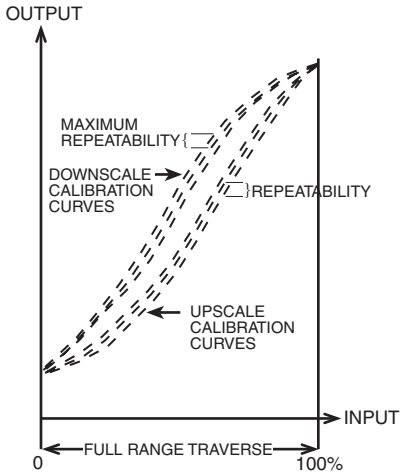

TEMPERATURE ERROR
The maximum change in output at any input value within the range when the product is changed from room (reference) temperature to specified temperature extremes. Temperature errors are specified in two ways defined as follows:

THERMAL COEFFICIENT DATA

Thermal Coefficient of Zero – the zero shift due to changes in temperature from room (reference) temperature to the specified limits of the operating range. Specified as ±% of span/°F. (over a temperature range).

Thermal Coefficient of Span – the span shift due to changes in temperature from room (reference) temperature to the specified limits of the operating range. Specified as ±% of span/°F. (over a temperature range).

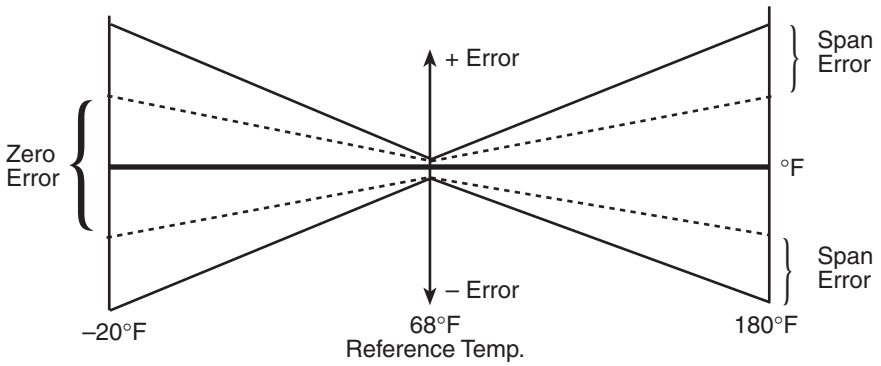

THERMAL ERROR DATA

Thermal Error of Zero – the zero shift due to changes in temperature from room (reference) temperature to the specified limits of the operating range. Specified as ±% of span (over a temperature range).

Thermal Error of Span – the span shift due to changes in temperature from room (reference) temperature to the specified limits of the operating range. Specified as ±% of reading (over a temperature range).

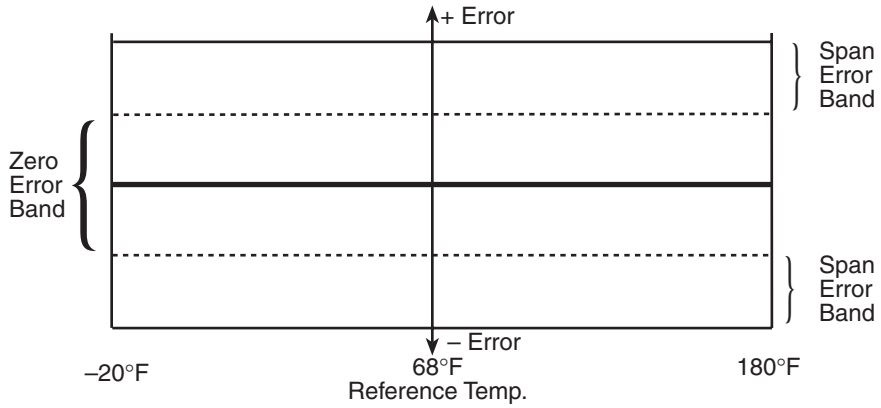

Note: Definitions are in accordance with:
ANSI/ISA S51.1 - 1993 “Process Instrumentation Terminology”
ANSI/ISA S37.1 - 1982 “Electrical Transducer Terminology”

ASHCROFT®
Measurably Better

Global Headquarters
Ashcroft Inc.
250 East Main St.
Stratford, CT 06614-5145
Phone: 203-378-8281

For access to our global web sites, additional products/specifications and a complete list of our operations, sales offices, distributors & reps visit:
www.ashcroftinc.com