Series 2000 Modular Console System - NEMA 12, 4, 4X

Turret Units

Standard Turret

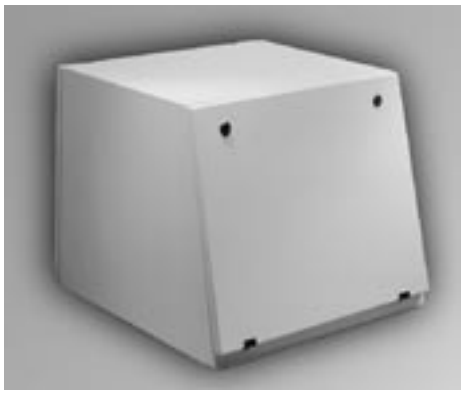

Deep Turret

Electronic Industries Alliance

Application

- Ideal as a housing for video screens.
- Flexible design provides panel mount or rack mount capabilities for a variety of applications.
- Generally used in combination with other modular console components (ie. base, pedestal, and/or desk).
- Available in either Standard (supported by Base, Pedestal, or Standard Desk) or Deep (supported by Deep Desk only) format.
- Smooth lines and clean edges provide an attractive, contemporary appearance.

Standards

RAL 7032 Beige

- UL 508 Type 12
- CSA Type 12
- EIA RS-310-D
- **Complies with**
  - NEMA Type 12
  - IEC 60529, IP54

ANSI 61 Gray

- UL 508 Type 3R, 4, 12
- CSA Type 3R, 4, 12
- EIA RS-310-D
- **Complies with**
  - NEMA Type 3R, 4, 12
  - IEC 60529, IP66

Stainless Steel (Type 304)

- UL 508 Type 3R, 4, 4X and 12
- CSA Type 3R, 4, 4X and 12
- EIA RS-310-D
- **Complies with**
  - NEMA Type 3R, 4, 4X, 12
  - IEC 60529, IP66

Construction

- Formed 14 gauge steel bodies with 14 gauge steel doors.
- Also offered with formed 14 gauge 304 stainless steel bodies with 14 gauge 304 stainless steel doors.
- Smooth, continuously welded seams without knockouts or holes.
- Body stiffeners are provided where required for increased strength and rigidity.
- Offered in 4 widths 24", 36", 48" and 60".
- Features solid sides and top, solid door on front (opens down) and back (opens up), and open bottom.
- Front door features sliding rod mechanism, which allows a 102° opening when in the lowered position.
- Rear door features manual, 3 position adjustable door stop which provides convenient support while door in open position.
- Formed lip on enclosure excludes flowing liquids and contaminants.
- Slotted quarter turn oil-tight latches secure the door, with optional tamper resistant and locking latches available.
- Stainless steel models utilize stainless steel hardware.
- Oil resistant gaskets are permanently secured and mechanically retained.
- Features several internal stud locations for mounting of various accessories.
- A bonding screw is provided on the door and a grounding stud is provided in the enclosure.

Finish

- Available in RAL 7032 beige powder coating, ANSI 61 gray powder coating and natural stainless steel with a smooth, brushed finish.
- 24" Front Window Door available in same finishes.

Accessories

- Air conditioners...*see page* ***389-405***
- Blowers...*see page* ***406***
- Filter fans...*see page* ***408-414***
- Fan trays...*see page* ***416***
- Heaters...*see page* ***418-420***
- Turret/Terminal Window Door...*see page* ***265***
- Series 2000 Modular Console Accessories...*see page* ***264-271***
- Rack Mount Accessories...*see page* ***272-274***

Tequipment.NET USA
205 Westwood Ave
Long Branch, NJ 07740
1-877-742-TEST (8378)
Fax: (732) 222-7088
salesteam@Tequipment.NET

All dimensions in inches unless specified otherwise

Series 2000 Modular Console System - NEMA 12, 4, 4X

Turret Units

Standard Turret

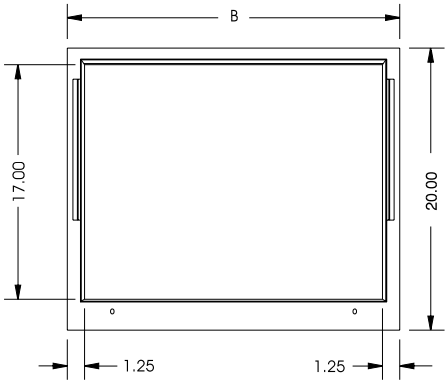

Front View

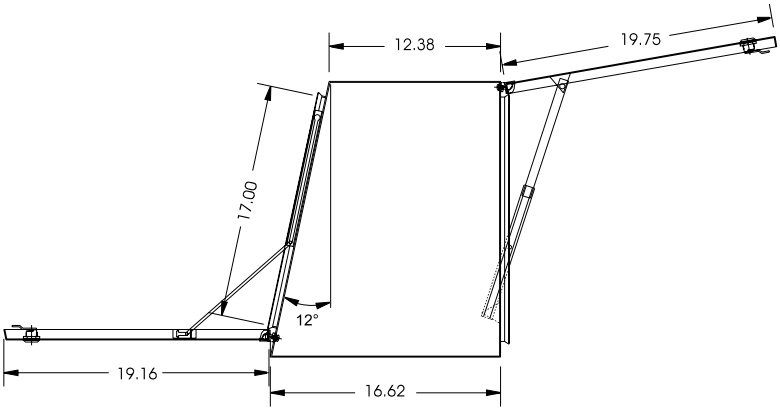

Side View

Deep Turret

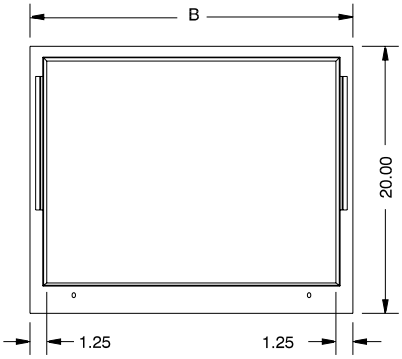

Front View

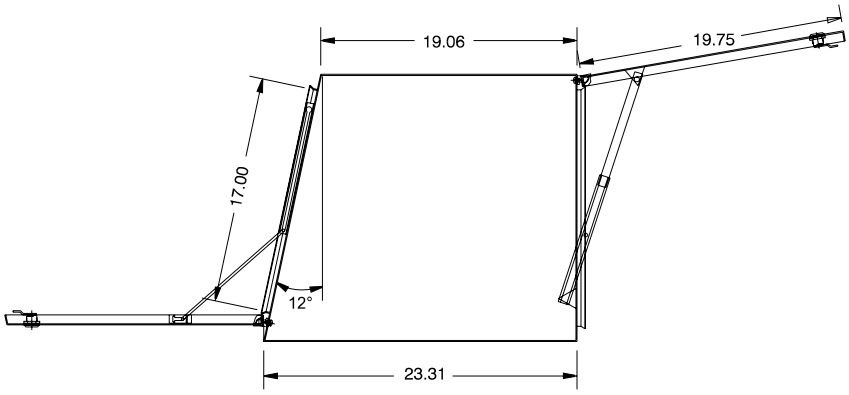

Side View

Tequipment.NET USA
205 Westwood Ave
Long Branch, NJ 07740
1-877-742-TEST (8378)
Fax: (732) 222-7088
salesteam@Tequipment.NET

Standard Turret

RAL 7032 Beige Part No.	ANSI 61 Gray Part No.	Stainless Steel Part No.	B
2CRT202436	**2CPT202436**	**2CST202436**	24
2CRT203636	**2CPT203636**	**2CST203636**	36
2CRT204836	**2CPT204836**	**2CST204836**	48
2CRT206036	**2CPT206036**	**2CST206036**	60

Deep Turret

RAL 7032 Beige Part No.	ANSI 61 Gray Part No.	Stainless Steel Part No.	B
2CRT202443	**2CPT202443**	**2CST202443**	24
2CRT203643	**2CPT203643**	**2CST203643**	36
2CRT204843	**2CPT204843**	**2CST204843**	48
2CRT206043	**2CPT206043**	**2CST206043**	60

All dimensions in inches unless specified otherwise